Industrial Barcode Printer

MH261 Series

Thermal Transfer ▪ Direct Thermal

Series Models

MH261T / MH361T

User Manual

www.tscprinters.com

Trademark and Copyright Notice

©2025 TSC Auto ID Technology Co., Ltd.

All trademarks mentioned in this document are the property of their respective owners. TSC is a trademark of TSC Auto ID Technology Co., Ltd., registered in many jurisdictions worldwide. Unauthorized reproduction or use of these trademarks, or any part of this document, is strictly prohibited.

Product Improvements and Updates

TSC Auto ID continuously strives to improve our products. All specifications, features, and designs are subject to change without notice as part of our ongoing product enhancement initiatives. It is recommended to regularly consult the latest documentation to ensure the most up-to-date information is being used. Product users should validate that any new specifications or feature updates for compatibility with their existing applications before implementation.

Proprietary Information and Confidentiality

This manual contains proprietary information of TSC Auto ID Technology Co., Ltd. (TSC), which is intended solely for the use of parties operating and maintaining the equipment described herein. Such proprietary information must not be used, reproduced, or disclosed to any third party for any purpose without the express written permission of TSC.

Disclaimer

While TSC Auto ID makes every effort to ensure the accuracy of the information contained in our specifications and manuals, errors may still occur. TSC Auto ID reserves the right to correct any errors, and disclaims any liability caused by such errors. The information provided in this document is for reference only and does not constitute a guarantee of performance or suitability for any particular application.

Limitation of Liability

TSC Auto ID is not responsible for any direct, indirect, incidental, or consequential damages arising from the use, inability to use, or performance of our products. This includes, but is not limited to, business losses, interruptions, or the loss of business data, even if TSC was advised of the possibility of such damages.

Some jurisdictions may not permit the exclusion of incidental or consequential damages, so the limitations and exclusions outlined here may not apply to you.

User Responsibility

It is the responsibility of the user to comply with all relevant laws and licensing agreements when using this document and the associated products. TSC Auto ID disclaims responsibility for any consequences arising from improper usage or unauthorized modifications to the products.

Security and System Integrity

TSC Auto ID is not responsible for security vulnerabilities introduced through third-party software, unauthorized file uploads, or improper system configurations via any access path. Users are responsible for implementing appropriate security measures to prevent potential risks. TSC Auto ID is not liable for any malfunctions, disruptions, or security issues resulting from such actions.

Table of Contents

1. Introduction 1

1.1 Product Specification 2

2. Operation Overview 4

2.1 Unpacking and Inspection 4

2.2 Printer Overview 5

2.3 Operator Control 8

2.4 Power-on Utilities 12

3. Setup 13

3.1 Setting up the Printer 13

3.2 Loading the Ribbon 14

3.3 Removing the Used Ribbon 16

3.4 Loading the Media 17

3.5 Loading the Fanfold/ External Media 20

3.6 Loading Media in Peel-off Mode (Option) 21

3.7 Using the PDF Print Dongle (Option) 22

4. Adjustment Knob 23

4.1 Printhead Pressure Adjustment Knob 23

4.2 Ribbon Tension Adjustment Knob 24

4.3 Mechanism Fine Adjustment to Avoid Ribbon Wrinkle 25

5. TSC Console Utility 27

6. LCD Menu Function 28

1.1 Enter the Menu 28

1.2 Menu Overview 29

1.3 Setting 30

1.4 Sensor 36

1.5 Interface 37

1.6 Advanced 42

1.7 File Manager 45

1.8 Diagnostic 46

1.9 Favorites 47

7. Troubleshooting 48

8. Maintenance 52

9. Agency Compliance and Approvals 54

Revision History 62

1. Introduction

Thank you very much for purchasing TSC barcode printer.

The new high-performance MH261T Series was designed to deliver the cleanest and high quality barcodes. It features a die-cast print mechanism housed in a very strong yet lightweight cabinet. This new design results in a more durable printer that is suited for your most heavy-duty demand cycles.

The MH261T Series printers are loaded with standard features including a color touch display with brand-new GUI design and six menu buttons to provide a great user experience, support for 600 meter long ribbons, 8” OD media rolls, built-in Ethernet, RS-232 interface, two USB hosts for keyboard and scanner connections, USB 2.0, serial and Parallel interfaces. GPIO ports, Wi-Fi and Bluetooth modules are available as an option.

This document provides an easy reference for operating the MH261T series. To print label formats, please refer to the instructions provided with your labeling software; if you need to write the custom programs, please refer to the TSPL/TSPL2 programming manual that can be found on TSC website at https://www.tscprinters.com.

1.1 Product Specification

Item / Model	MH261T	MH361T
Resolution	203 DPI 8 dots/mm	300 DPI 12 dots/mm
Printing method	Thermal transfer and direct thermal	
Max. print speed	305 mm (12”)/second	254 mm (10”)/second
Max. print width	168 mm(6.61”)	
Max. print length	14,732 mm (580“)	6,604 mm (260“)
Enclosure	Die-cast print mechanism with large clear media view window	
Physical dimension	357 mm (W) x 313 mm (H) x 514 mm (D) 14.05” (W) x 12.32 (H) x 20.24” (D)	
Weight	17.8 kg (39.24 lbs)	
Label roll capacity	208.3 mm (8.2”) O.D.	
Internal rewinder (full roll)	Internal rewinder kit (5” O.D.) (dealer option)	
Ribbon capacity	450 meter long, max. OD 81 mm, 1“ core (Ink coated outside or inside)	
Ribbon width	50.8 mm ~ 178 mm (2”~7”)	
Processor	32-bit RISC CPU	
Memory	• 512MB Flash memory • 256MB SDRAM • microSD Flash memory card reader for Flash memory expansion, up to 32 GB	
Interface	• RS-232 • Parallel • USB 2.0 (High speed mode) • Internal Ethernet, 10/100 Mbps • USB host *2 (Front side), for scanner or PC keyboard • GPIO (DB15F) (dealer option) • Slot-in 802.11 a/b/g/n/ac Wi-Fi with Bluetooth 4.2 combo module (dealer option)	
Power	Auto sensing power supply • Input: AC 100-240V, 4-2A, 50-60Hz • Total 243W	
LCD display/ Operation buttons	• Multi-language selectable • 6 operation buttons (menu, select, up, down, left/pause, right/feed) • 1 LED (with 2 LEDs Green & Red)	
LCD	• 4.3” color display, 480 x 272 pixel; Resistive touch screen	

Sensors	• Gap transmissive sensor (Position adjustable) • Black mark reflective sensor (Bottom black mark sensor, Position adjustable) • Ribbon end sensor • Ribbon encoder sensor • Head open sensor	
Real time clock	Standard	
Internal font	• 8 alpha-numeric bitmap fonts • Monotype Imaging® CG Triumvirate Bold Condensed scalable font	
Bar code	1D bar code: Code 39, Code 93, Code128UCC, Code128 subsets A.B.C, Codabar, Interleave 2 of 5, EAN-8, EAN-13, EAN-128, UPC-A, UPC-E, EAN and UPC 2(5) digits add-on, MSI, PLESSEY, POSTNET, RSS-Stacked, GS1 DataBar, Code 11, China Post 2D bar code: PDF-417, Maxicode, DataMatrix, QR code, Aztec, rMQR code	
Font & bar code rotation	0, 90, 180, 270 degree	
Command set	TSPL-EZD (Compatible to EPL, ZPL, ZPL II, DPL)	
Media type	Continuous, die-cut, black mark (Bottom side black mark only), fan-fold, notch (outside wound)	
Media width	50.8 ~ 172.7 mm (2“ ~ 6.8“)	
Media thickness	0.06 ~ 0.268 mm (2.36~ 11.02 mil)	
Media core diameter	3.81 mm / 76.2 mm (1.5”/ 3”)	
Label length	10 ~ 14,732 mm (0.39“ ~ 580“)	10 ~ 6,604 mm (0.39“ ~ 260“)
Environment condition	Operation: 0~ 40℃ (32 ~ 104℉), 25~85% non-condensing Storage: -40 ~ 60 ℃ (-40 ~ 140℉), 10~90% non-condensing	
Safety regulation	FCC Class A, CE Class A, RCM Class A, UL, cUL, TÜV, CCC, KC, BIS, BSMI, EAC, Argentina S mark, Mexico CoC, ENERGY STAR®	
Environmental concern	Comply with RoHS, WEEE	
Dealer option	• GPIO Card (DB15F) • Heavy duty cutter (full cut)/ Regular guillotine cutter (Max.4ips) • 802.11 a/b/g/n/ac Wi-Fi with Bluetooth 4.2 combo module (including slot-in housing) • Peel-off kit • Internal rewinding kit (5” O.D.)	
User option	• 802.11 a/b/g/n/ac Wi-Fi + BT combo module (for Wi-Fi ready with re-installed Wi-Fi slot-in housing) • KP-200 Plus keyboard display unit • PDF print dongle	

2. Operation Overview

2.1 Unpacking and Inspection

This printer has been specially packaged to withstand damage during shipping. Please carefully inspect the packaging and printer upon receiving the bar code printer. Please retain the packaging materials in case you need to reship the printer.

Unpacking the printer, the following items are included in the carton.

- 1 Printer unit
- 1 Quick installation guide
- 1 Power cord
- 1 USB interface cable

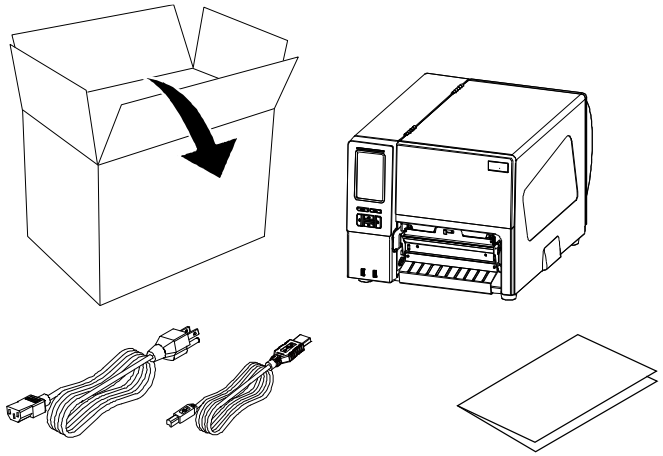

If any parts are missing, please contact the Customer Service Department of your purchased reseller or distributor.

2.2 Printer Overview

Front View

1. LED indicator
2. LCD display
3. Front panel buttons
4. USB host x 2
5. Media view window
6. Paper exit chute
7. Media cover

Interior View

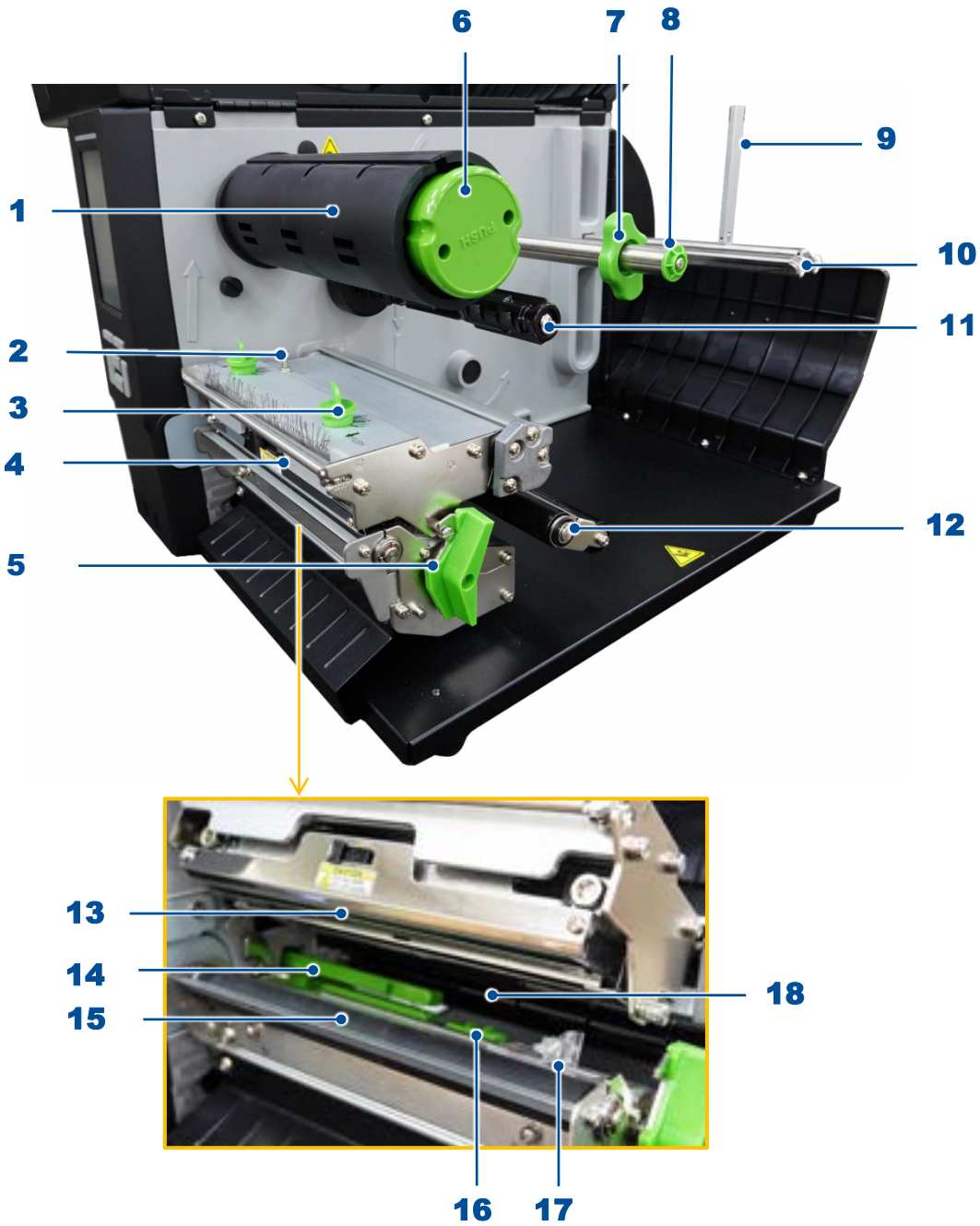

1. Ribbon rewind spindle
2. Z axis mechanism adjustment knob
3. Print head pressure adjustment knobs
4. Ribbon guide bar
5. Print head release lever
6. Ribbon release button
7. Rear label guide
8. Media guide bar
9. Rear label guide
10. Label supply spindle
11. Ribbon supply spindle
12. Media damper
13. Print head
14. Gap sensor
15. Platen roller.
16. Black mark sensor
17. Front label guide
18. Ribbon sensor

Rear View

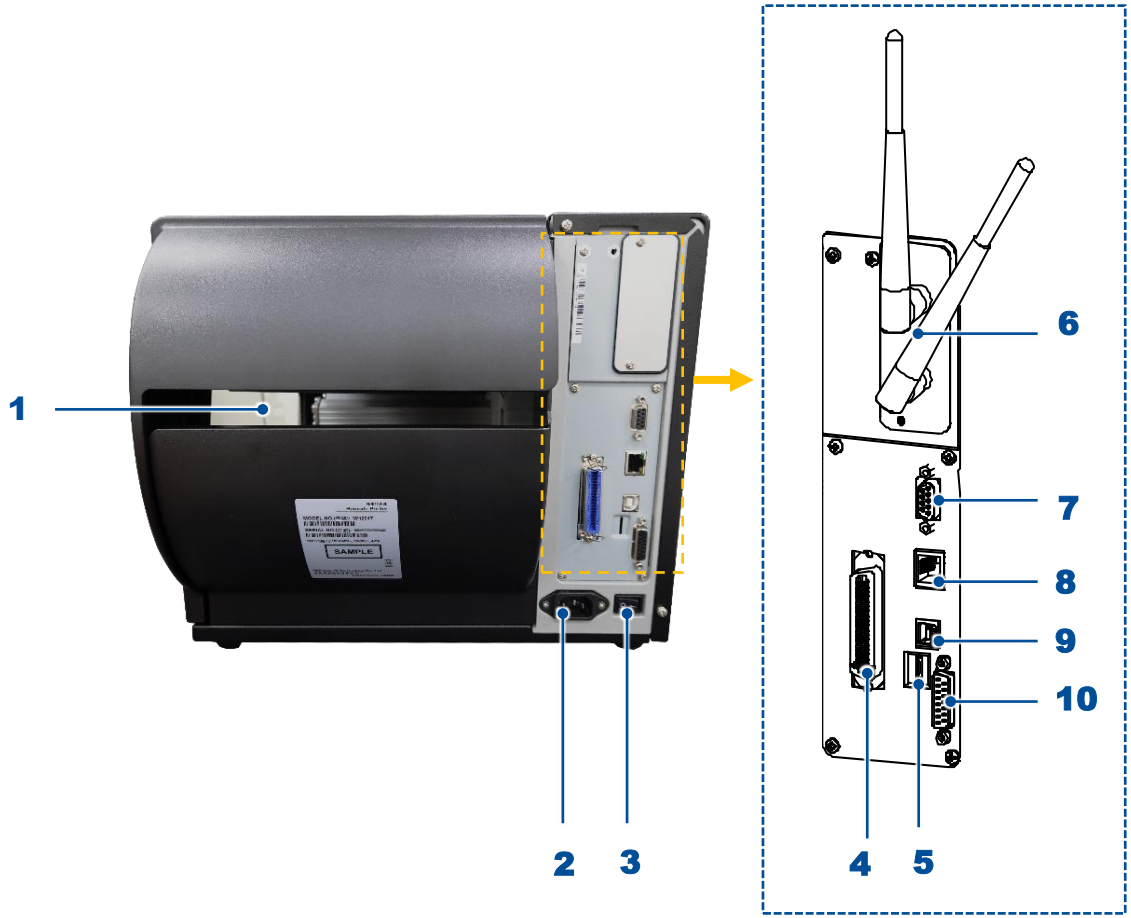

1. External label entrance chute
2. Power cord socket
3. Power switch
4. Centronics interface
5. SD card socket
6. Slot-in Wi-Fi module (Option)
7. RS-232C interface
8. Ethernet interface
9. USB interface
10. GPIO interface (Option)

Note:
The interface picture here is for reference only. Please refer to the product specification for the interfaces availability.

2.3 Operator Control

LED Indication and Keys

LED Color	Meaning
(Green)	**Solid:** Power is on and ready to be used. **Flash:** The system is downloading data from PC to memory or the printer is paused.
(Amber)	System is clearing data.
(Red)	**Solid:** Printer head open, cutter error. **Flash:** Printing error, such as paper empty, paper jam, ribbon empty, or memory error etc.

Keypads	Function
 Left/Right soft keys	The labels on the footer of the UI will explain the function for left and right soft key. Check the labels on the footer of the UI screen. The meaning of the select keys will vary.
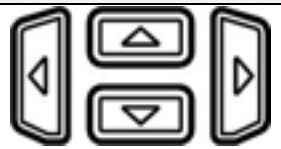 **Navigational keys**	Used to select icons, menu selection, and navigation in the UI.

LCD Control Panel Icon Indication

Icon	Indication
	Wi-Fi device is ready
	Ethernet is connected
	Bluetooth device is ready
	Remaining amount of ribbon(m)
	Media capacity (%) notice
	TPH clean notice
PDF	Indicates that the printer is equipped with PDF printing function
	Enter the "menu" (the "Menu" is locked and a password is required)
	Calibrate the media sensor
	Enter the "Favorites" option (the [Favorites] is locked and a password is required.)
	Back button
	Enter cursor (be marked in green) located option
	Feed button (advance one label)
	Scroll up button
	Scroll down button

Touch Screen Manipulation

Tap an item to open/use it.

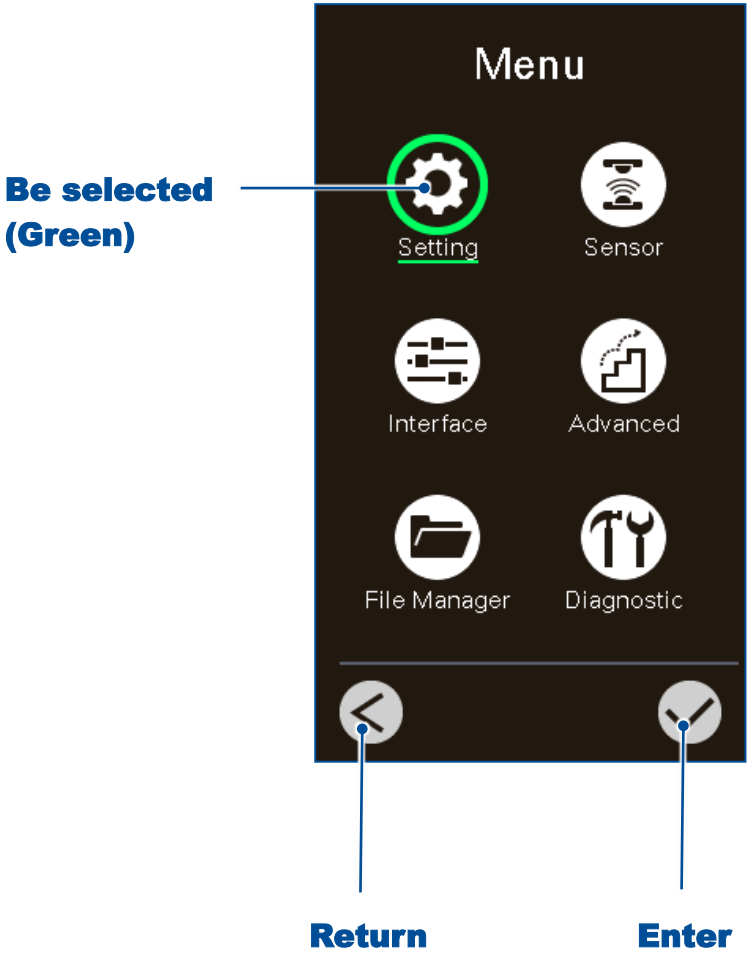

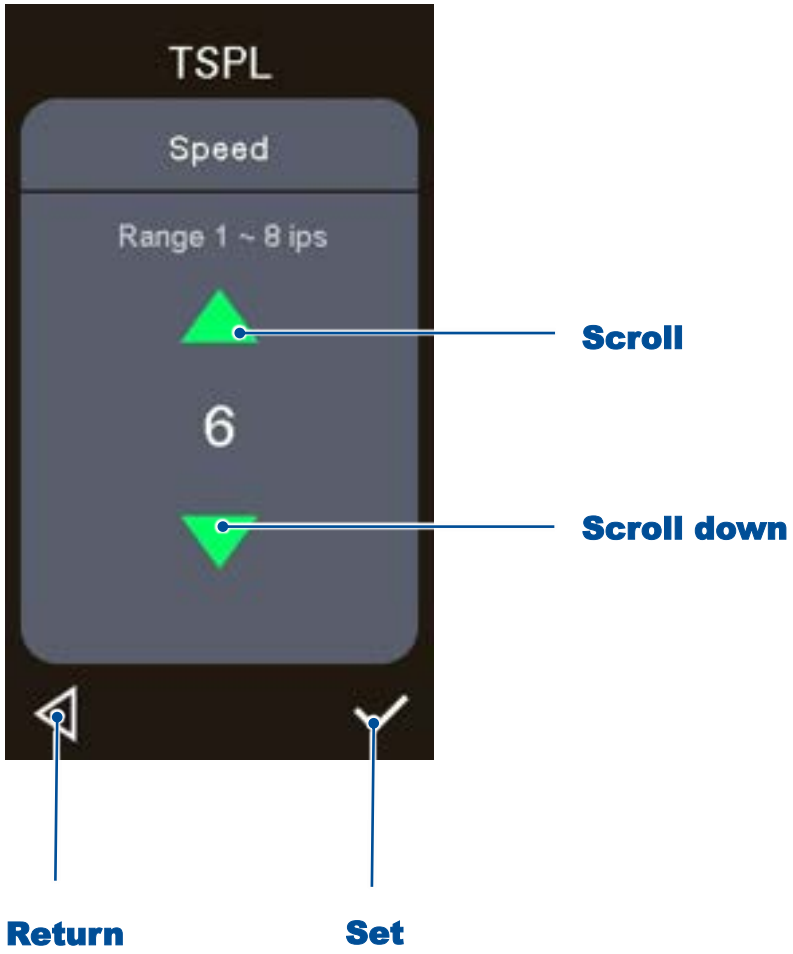

2.4 Power-on Utilities

Power-on Utilities provides the basic functions and can be activated by below procedures:

Turn off the power > **Hold** the button > **Turn on** the power > **Release** the button depending on the color of the LED.

Power down and hold the right side of the Select Keys 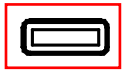 to restart the printer.

Sequences of the settings:

LED Colors / Functions	Amber	Red (5 blinks)	Amber (5 blinks)	Green (5 blinks)	Green / Amber (5 blinks)	Red / Amber (5 blinks)	Solid green
1. Sensor Calibration (Gap / black mark sensor)		**Release**					
2. Self-Test (And enter dump mode)			**Release**				
3. Factory Default				**Release**			
4. Black Mark Calibration					**Release**		
5. Gap Calibration						**Release**	
6. READY (Skip AUTO.BAS)							**Release**

3. Setup

3.1 Setting up the Printer

1. Place the printer on flat surface.

2. Make sure the printer is power off.

3. Connect the printer to the computer with the provided USB cable.

4. Plug the power cord into the AC power cord socket at the rear of the printer, and then plug the power cord into a properly grounded power outlet.

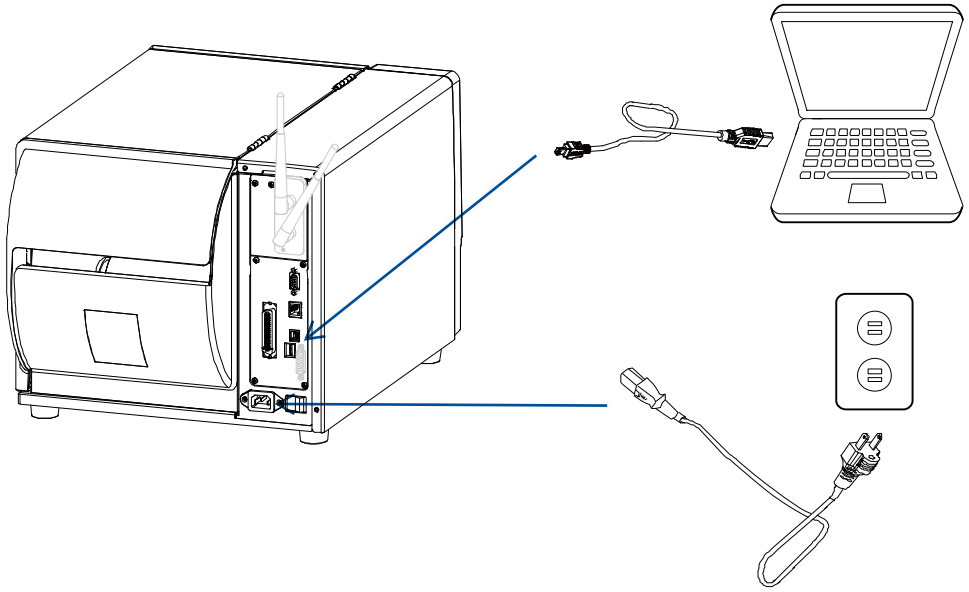

Note: Please switch OFF the printer before plugging in the power cord to printer power jack.

3.2 Loading the Ribbon

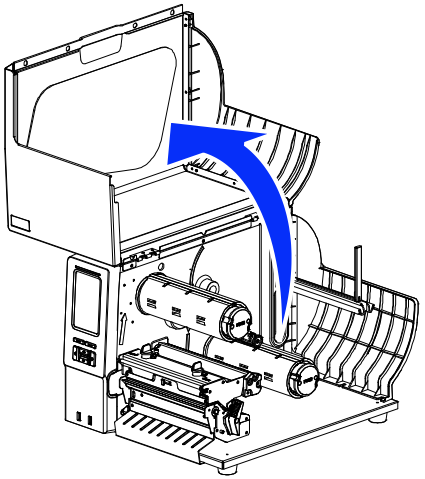

1. Open the printer cover.

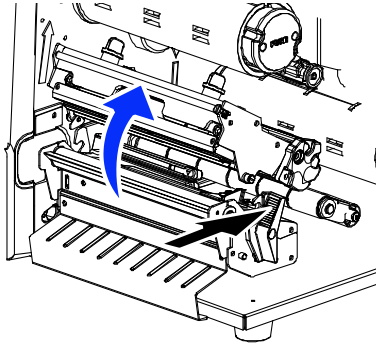

2. Release lever to open the print head mechanism.

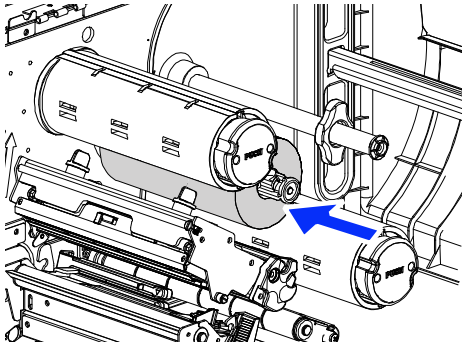

3. Install the ribbon onto the ribbon supply spindle.

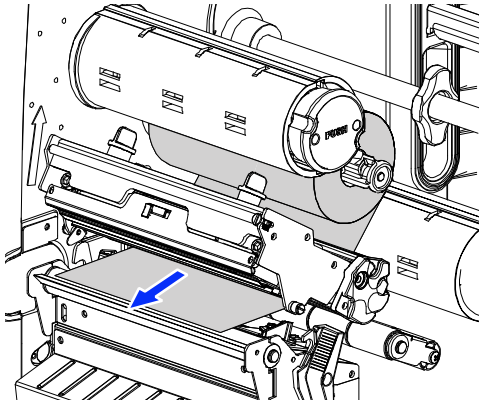

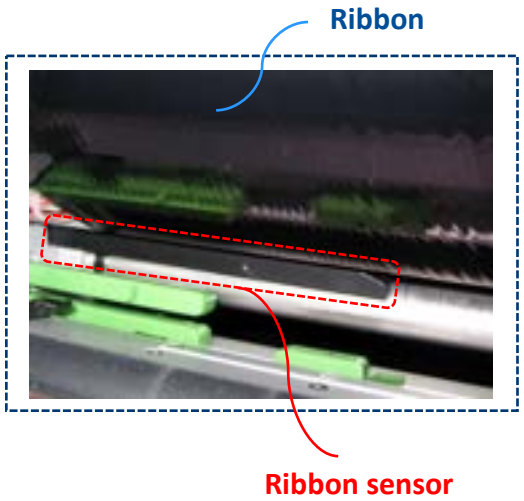

4. Thread the ribbon through the ribbon sensor slot and then to open space in between print head and platen roller.

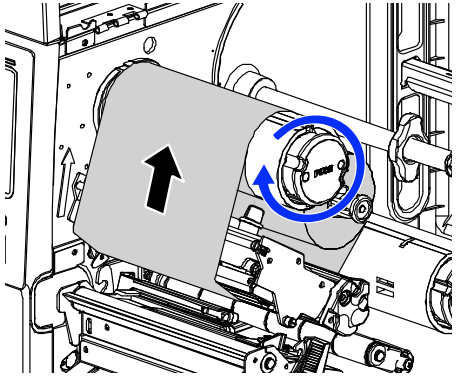	5. Wind the ribbon clockwise about 3~5 circles onto the ribbon rewind spindle until it is smooth and properly stretched.	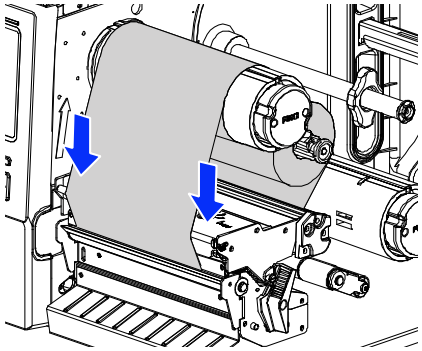	6. Close the print head mechanism by pushing down on both right and left sides of the deck, making sure the latches are engaged securely.

Loading path for ribbon

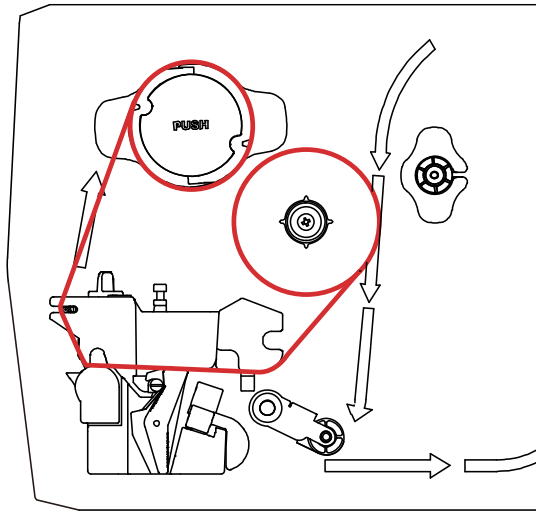

Note: Please refer to video on TSC YouTube.

3.3 Removing the Used Ribbon

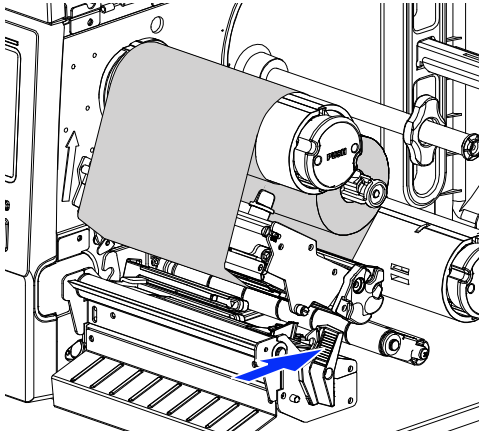

1. Lift the handle to open the printer right side cover.
2. Push the print head release lever to open the print head mechanism.

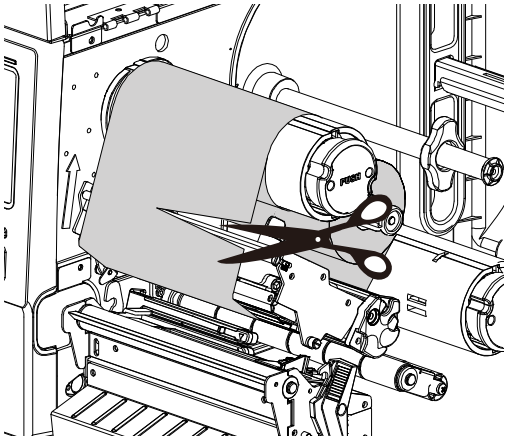

3. Break the ribbon between the ribbon guide bar and the ribbon rewind spindle.

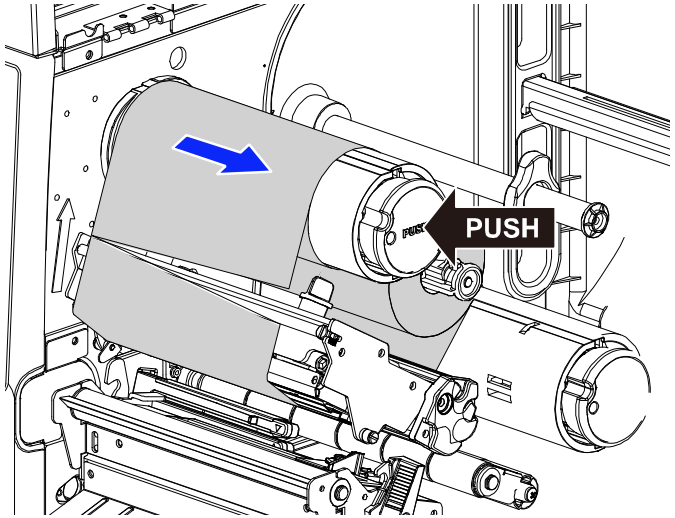

4. Keep pressing the ribbon release button to slide the used ribbon roll off the rewind spindle.

3.4 Loading the Media

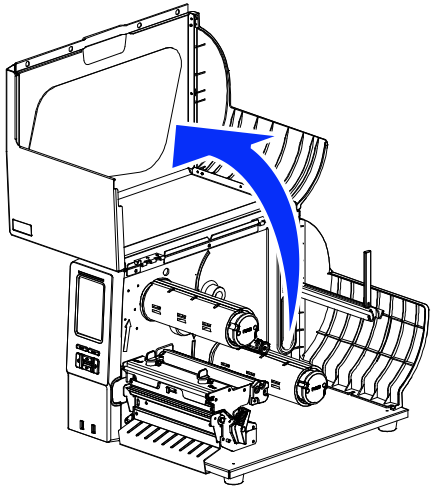	1. Open the printer cover.	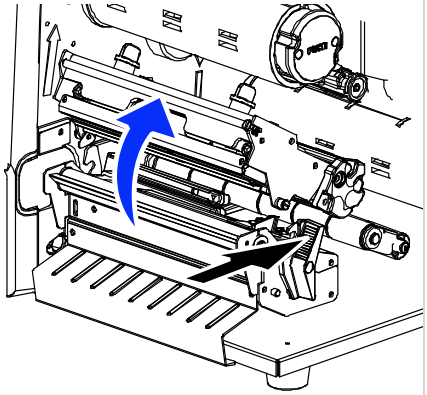	2. Release the lever to open the print head mechanism.
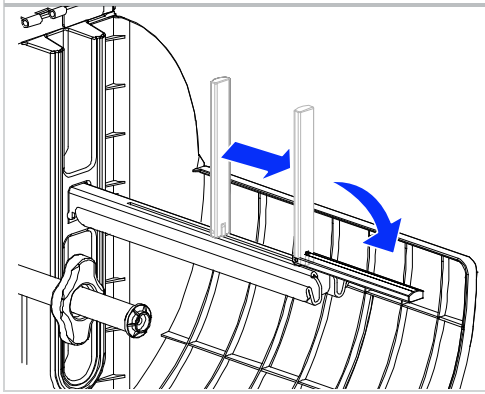	3. Move the label roll guard to the end of the label spindle and flip it down.	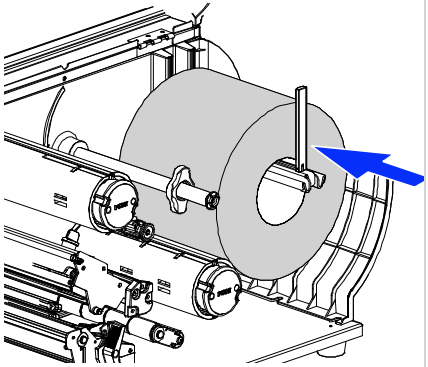	4. Place media on the label supply spindle and push it to the end of spindle. Use label roll guard to fit the width of label roll.

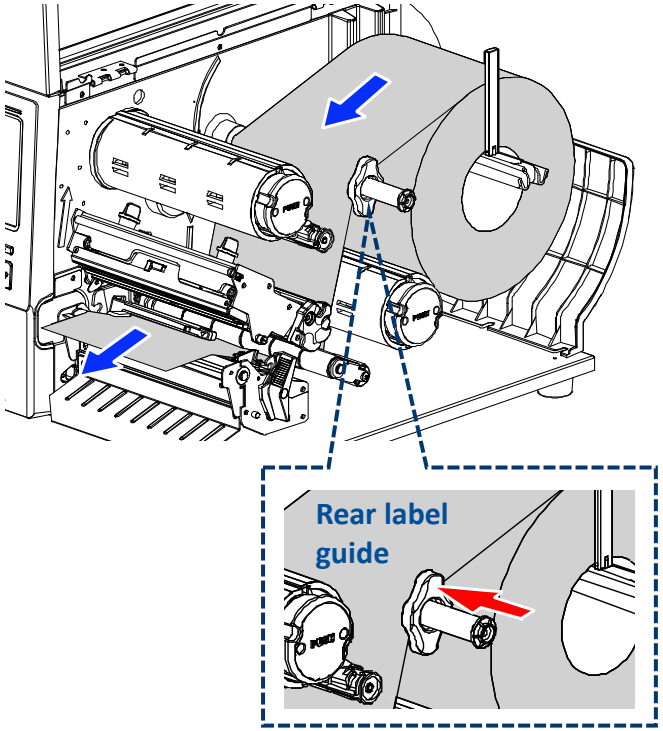

5. Pull label roll leading edge forward through the media guide bar, damper, media sensor (green) and place the label leading edge onto the platen roller. Adjust the rear label guide (green) to fit the width of the label. Move the media sensor at the correct position.

Note:
*** The sensor location is marked by a triangle mark ▽ at the sensor housing.**
*** The media sensor position is moveable, please make sure the gap or black mark is at the location where media gap/black mark will pass through for sensing.**

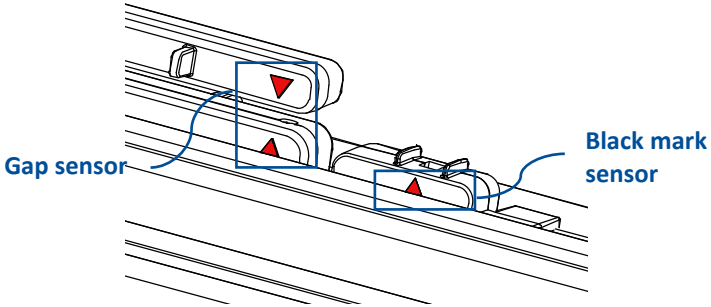

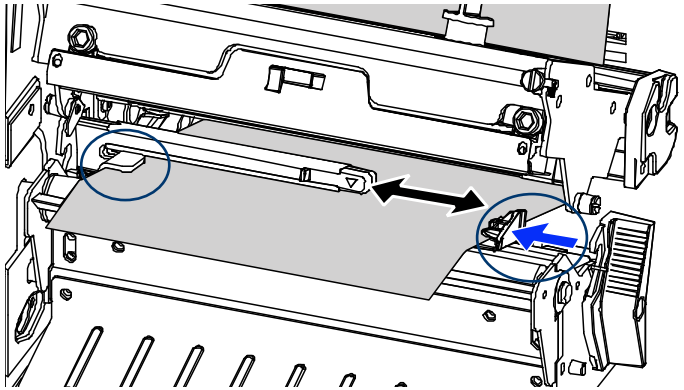

6. Adjust the front label guide to fit the width of the label. Making sure the label is into both label guides.

7. Close the print head mechanism by pushing down on both right and left sides of the deck. Make sure the latches are engaged securely.

8. Using the front display panel to calibrate the media sensor.

Loading path for media & ribbon

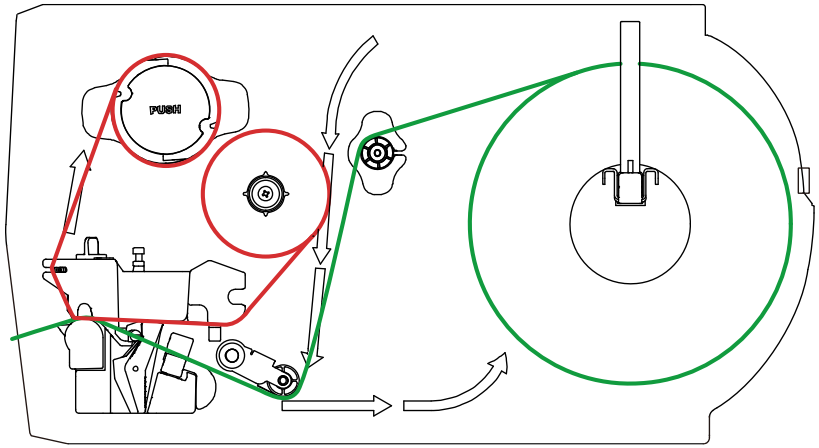

Note:
*** Please calibrate the gap/black mark sensor when changing media.**
*** Please refer to video on TSC YouTube.**

3.5 Loading the Fanfold/ External Media

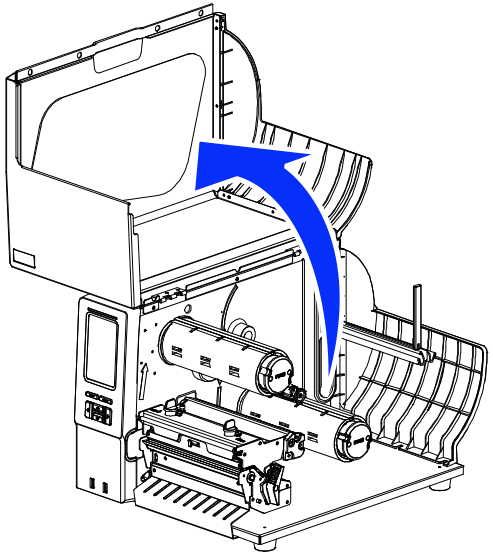

1. Open the cover of the printer.
2. Insert the fanfold media through the rear external label entrance chute.
3. Refer 3.4 to load the media.
4. Using the front display panel ( ), calibrate the media sensor.

Note: Please calibrate the gap/black mark sensor when changing media.

Loading path for fan-fold labels

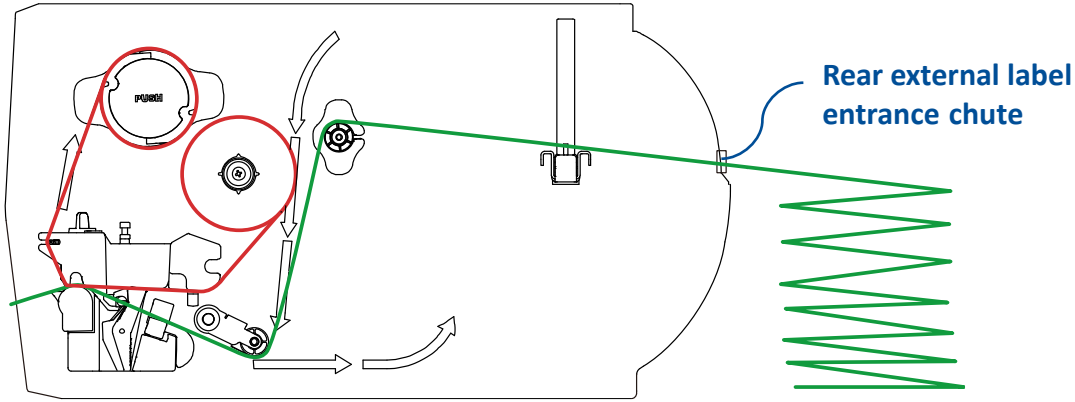

3.6 Loading Media in Peel-off Mode (Option)

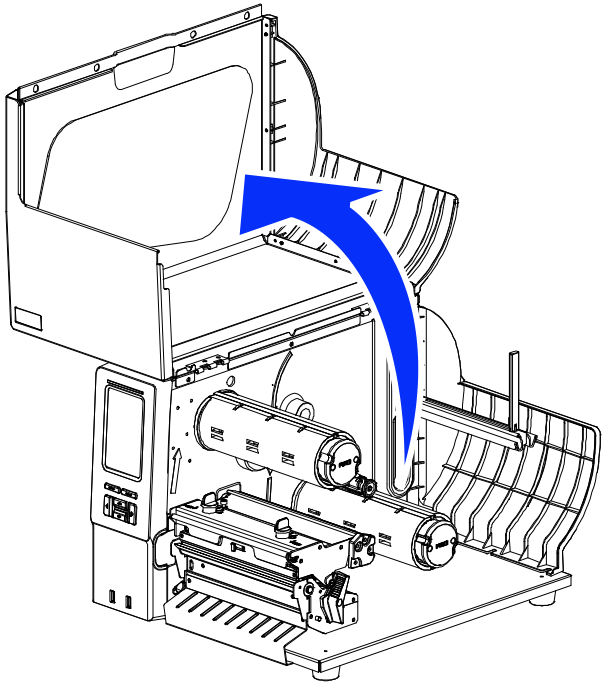

1. Lift the handle to open the printer right side cover and refer to the "Loading the Media" section to load the media.
2. Using the front display panel to calibrate the media. ( )
3. Enter the **Menu** to set peeler mode.
   (**Menu →Setting→Print Mode→ Peeler Mode)**

Note:
Please calibrate the gap/black mark sensor before loading media in peel-off mode to avoid paper jam.

4. Open print head release lever to pull approximately 650mm of label through the front of the printer and remove some labels.
5. Open the peeler off cover. Feed the liner between peel-off roller and platen roller.
6. Wrap the label onto the internal rewind spindle and wind the spindle counter-clockwise until the liner is properly stretched.
7. Close the peeler off cover and the print head mechanism.
8. Peeling will automatically start. Press the FEED button to test.

Loading path for peeler mode

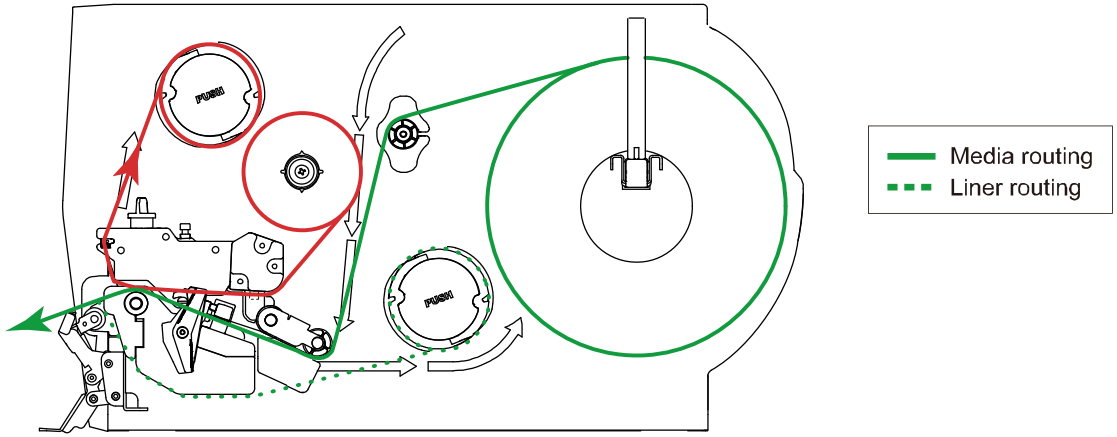

3.7 Using the PDF Print Dongle (Option)

1. Insert the PDF print dongle into the printer RS-232 interface.
   Ensure the dongle is properly inserted.

2. Tighten the hand screws to prevent it from falling off.
3. A PDF icon will be displayed on the printer screen, as shown below.

4. After confirming the connection interface, you can send the PDF files directly to the printer through the utility tool or operating system for printing, without the need for PDF management middleware or conversion software.

Note:

- **This PDF print dongle supports printer with RS-232 interface.**
- **Supports hot-swapping; can be inserted or removed both before and after powering on.**
- **This PDF print dongle requires a supported printer firmware.**
- **Supported PDF Version：PDF 1.0, 1.1, 1.2, 1.4, 1.5, 1.6, 1.7 (non-interactive PDF features)**
- **PDF data can be sent via any available interface (excluding RS-232) of the supported printers, such as USB, Ethernet, Wi-Fi, Bluetooth, etc.**

4. Adjustment Knob

4.1 Printhead Pressure Adjustment Knob

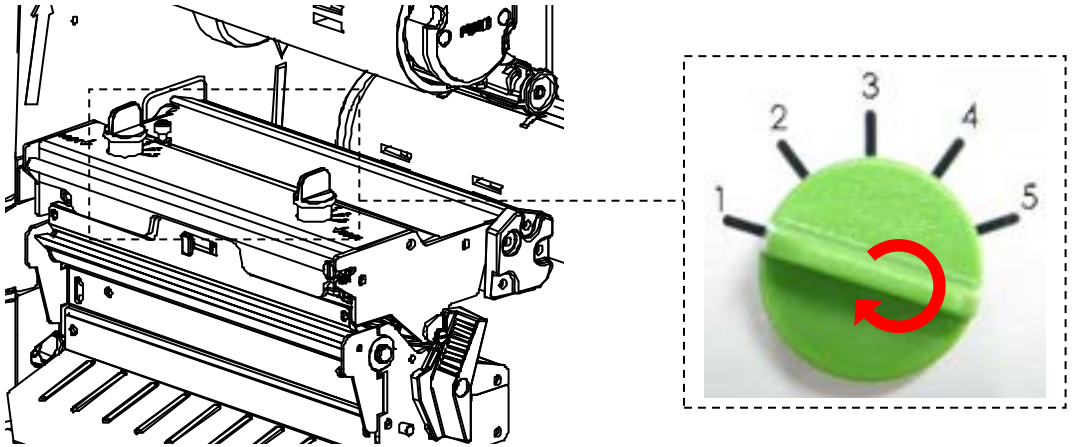

The **Printhead Pressure Adjustment Knob** has 5 levels of adjustment. Because the printer's paper alignment is to the left side of mechanism, different media widths require different pressure to print correctly. Therefore it may require to adjust the pressure knob to get your best print quality.

For example,

- If the label width is 4", adjust both print head pressure adjustment knobs to the same level.
- If the label is less than 2" wide, increase the left side print head pressure by rotating the adjustment knob clockwise and decrease the right side pressure by rotating the adjustment knob counter-clockwise to level 1.

4.2 Ribbon Tension Adjustment Knob

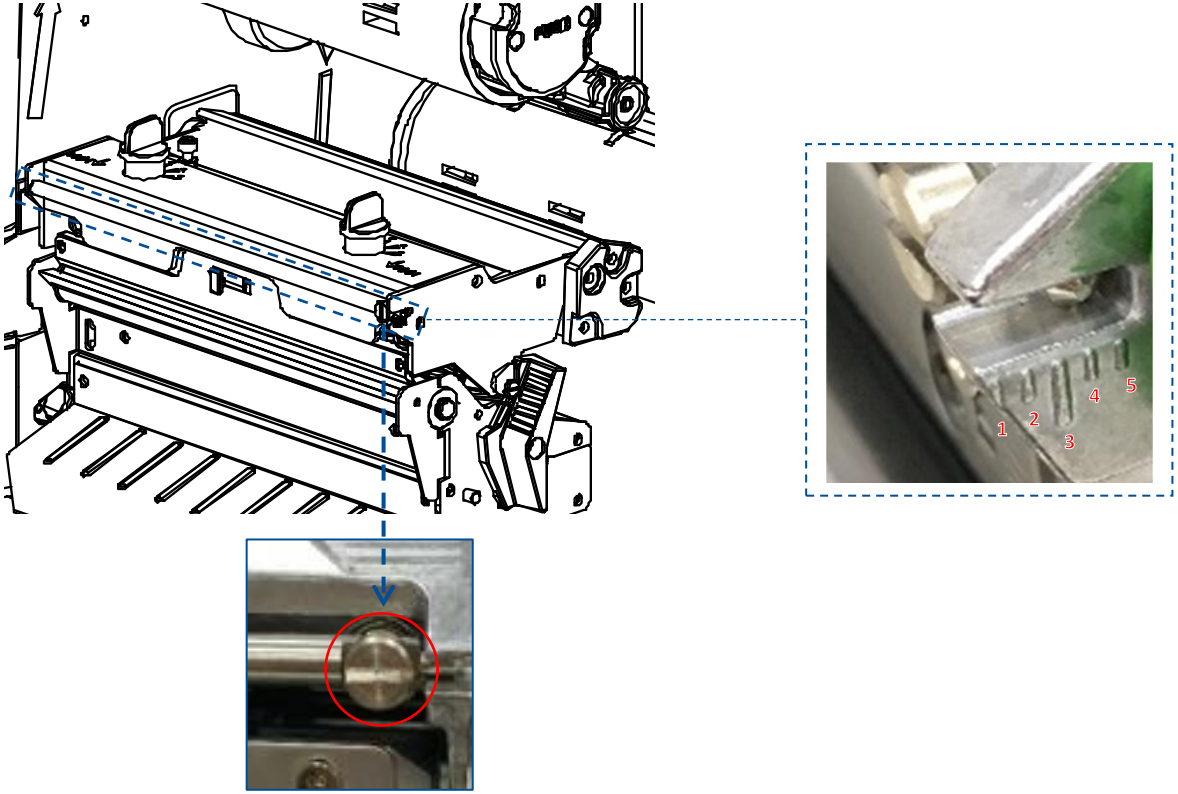

The **Ribbon Tension Adjustment Knob** has 1 ~ 5 positions for adjustment. Use screw driver to change the ribbon tension position. Because the printer's ribbon alignment is to the left side of mechanism, different ribbon or media widths require different tension to print correctly. Therefore it may require to adjust the ribbon tension knob to get your best print quality.

4.3 Mechanism Fine Adjustment to Avoid Ribbon Wrinkle

This printer has been fully tested before delivery. There should be no ribbon wrinkle presented on the media for general-purpose printing application. Ribbon wrinkle is related to the media thickness, print head pressure balance, ribbon film characteristics, print darkness setting…etc. In case the ribbon wrinkle happens, please follow the instructions below to adjust the printer parts.

Adjustable Printer Parts	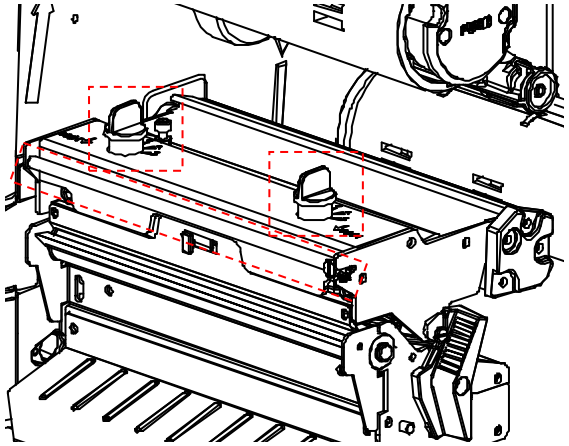 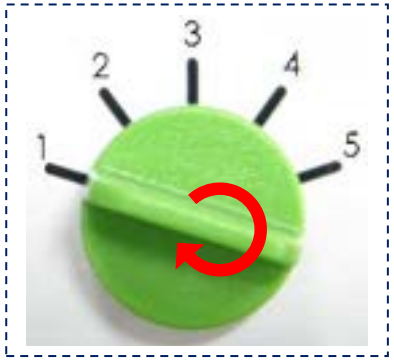 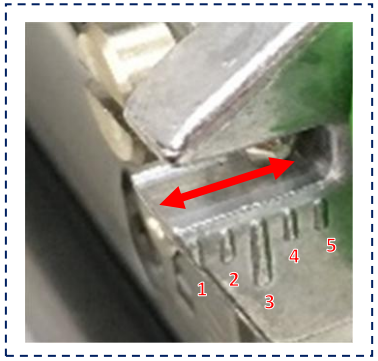	
Symptom	**1. Wrinkle happens from label lower left to upper right direction ("/")**	**2. Wrinkle happens from label lower right to upper left direction ("\")**
Wrinkle Example		

Feed direction

	If the wrinkle on the label starts from the lower left side to upper right side, please do following adjustment. 1. Clockwise direction adjust the ribbon tension adjustment knob to “2” or “1” position. Then check if wrinkle is gone. 2. Decrease the right side print head pressure adjustment knob setting 1 level per each adjustment then print the label again to check if wrinkle is gone. 3. If the right side print head adjustment knob setting has been set to index 1 (the lowest pressure index), please increase the left side print head pressure. 4. If the left side print head adjustment knob setting has been set to 5 (the highest pressure index) the wrinkle can’t be avoid, please rotate the both knobs back to setting 1 then rotate the Z-axis mechanism adjustment knob clockwise for a few degrees and print again for fine tune the print head pressure distribution. **Note for step 4:** *Factory default setting, the Z-axis knob is rotated counter clockwise to the end of thread. *Turn the Z-axis mechanism adjustment knob clockwise until you feel the knob touch the mechanism for the first adjustment. * If the wrinkle is still there, please turn the Z-axis mechanism adjustment knob clockwise about 1/4 circle each time for adjustment * If the winkled direction is change from “/” to “\” by adjusting the Z-axis mechanism adjustment knob, please turn the Z axis mechanism adjustment knob counter clockwise to avoid the wrinkle.	If the wrinkle on the label starts from the lower right side to upper left side, please do following adjustment. 1. Counter clockwise adjust the ribbon tension adjustment knob to “4” or “5” position. Then check if wrinkle is gone. 2. Decrease the left side print head pressure adjustment knob setting 1 level per each adjustment then print the label again to check if wrinkle is gone. 3. If the left side print head adjustment knob level has been set to index 1 (the lowest index), please increase the right side print head pressure.

5. TSC Console Utility

TSC Console (PC Version) is an all-in-one management tool that integrates **Printer Management, Diagnostic Tool, CommTool**, and **Printer Settings**, designed specifically for a wide range of **TSC printers**.

It enables IT personnel to easily deploy, manage, monitor, and troubleshoot both wired and wireless connections for single or multiple printers. Users can adjust printer settings and status, download graphics, deploy fonts, images, and label templates, upgrade firmware, and send additional commands to multiple printers simultaneously.

With its intuitive Windows graphical interface, **TSC Console** simplifies printer setup and daily management, while its integrated management capabilities enhance system stability—ensuring printers remain operational, reliable, and easy to maintain.

Please visit TSC's official website to download this utility, and scan the QR code below to access the **TSC Console Manual** for detailed usage instructions.

6. LCD Menu Function

1.1 Enter the Menu

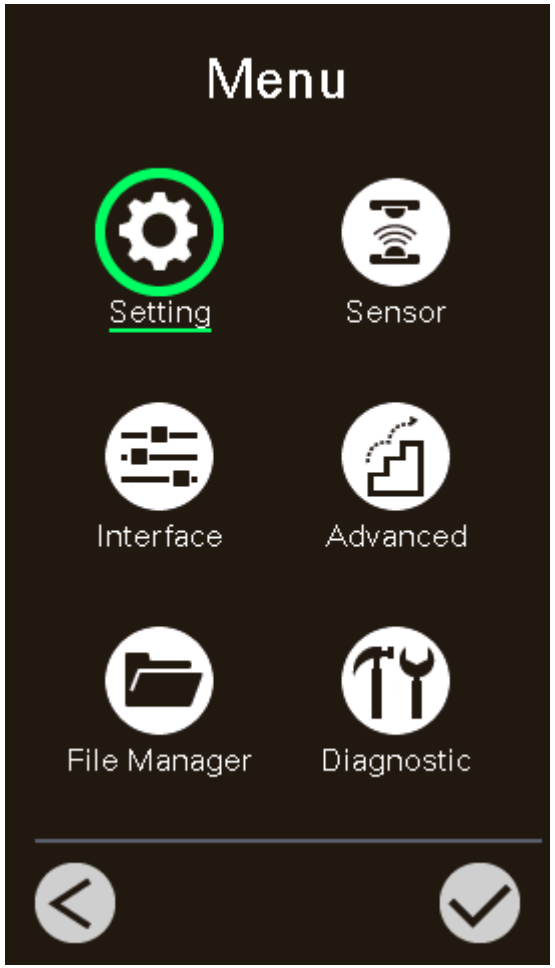

- **By touch display:**

  Tap the (Menu) icon on LCD main page to enter the menu.

- **By Keys:**

  Use navigational keys to select the (Menu) icon (be marked in green) and press the left soft key button (means) to enter the menu.

1.2 Menu Overview

There are 6 categories on the menu. Users can easily set the settings of the printer without connecting the computer. Please refer to following sections for more details.

Setting : To set up the printer settings for TSPL & ZPL2.

Sensor : To calibrate the selected media sensor.

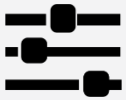

Interface : To set the printer interface settings.

Advanced : To set LCD, initialization, cutter type,…etc.

File Manager : To check and manage printer's memory storage.

Diagnostic : To check printer and help users to troubleshoot the problems.

1.3 Setting

Tap the **Command Set** on LCD to switch between TSPL and ZPL2. **Command Set** can also be activated by **Navigational Keys**.

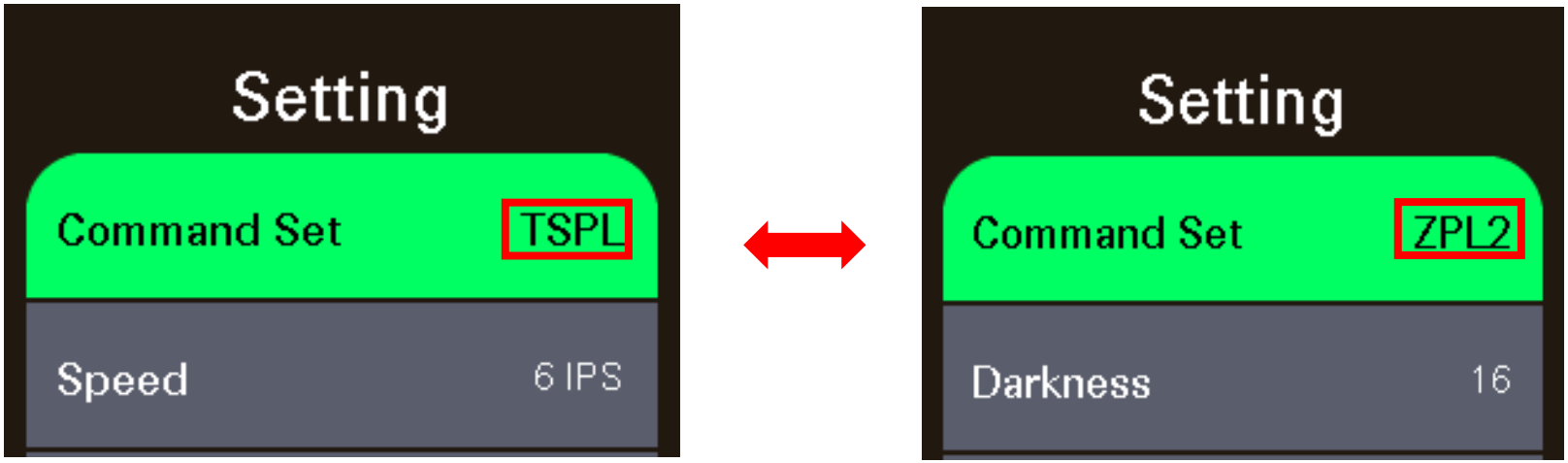

6.3.1 TSPL

TSPL category can set up the printer settings for TSPL.

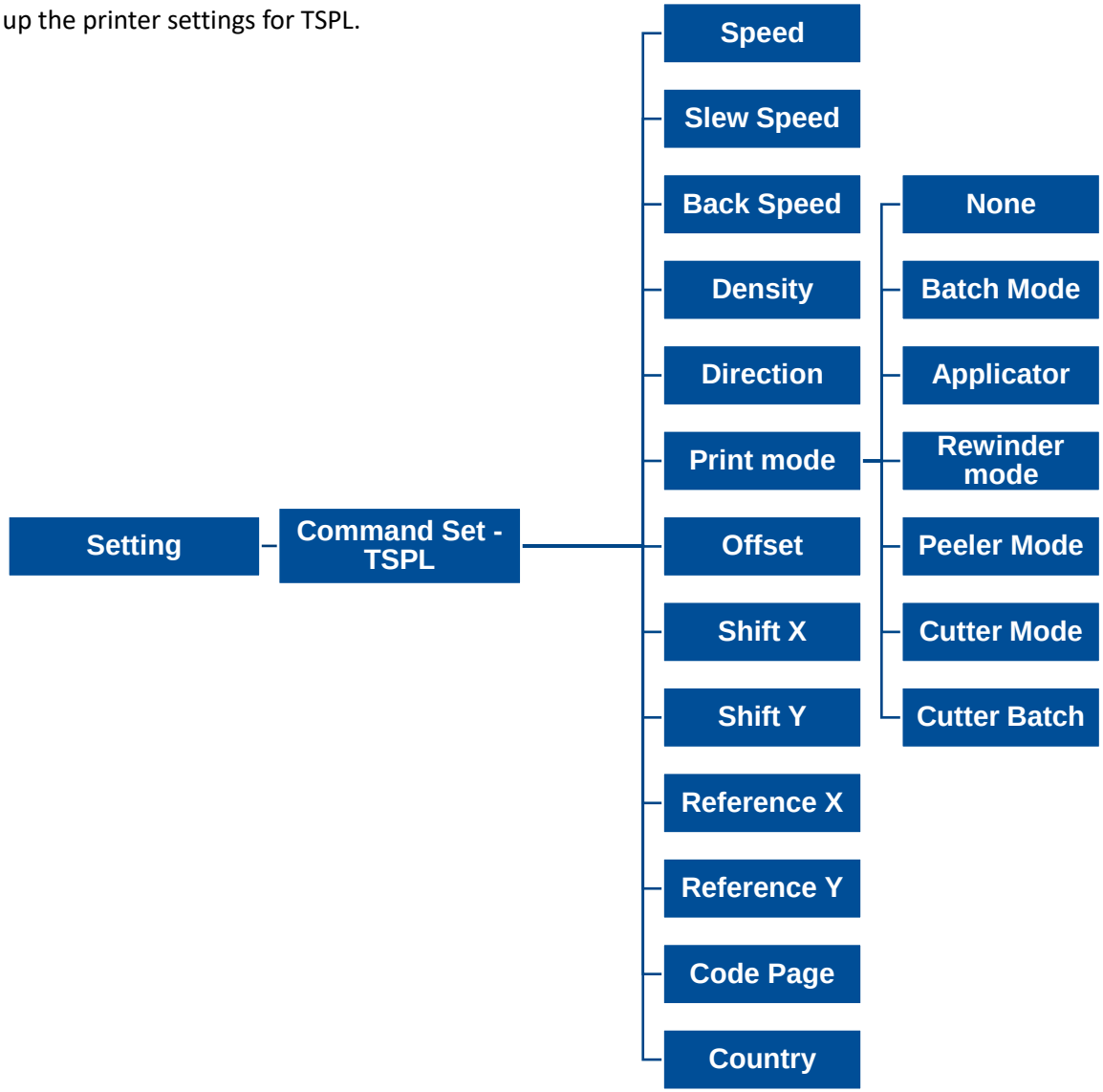

Item	Description	Default
Speed	Set the print speed	**203 dpi: 8** **300 dpi: 6**
Slew Speed	Set feed speed	**203 dpi: 6** **300 dpi: 4**
Back Speed	Set back speed	**2**
Density	Set printing darkness. Setting range: 0 to 15, and the step is 1.	**8**
Direction	Set the printout direction. Setting Value: 0 and 1. (Feed direction ⬇) Direction 0: Direction 1:	**0**
Print mode	Set the print mode. There are 6 modes in total: **None:** Next label top of form is aligned to the print head burn line location. (Tear Off Mode) **Batch Mode:** Once finishing the printing process, label will be fed to the tear plate location. **Peeler Mode:** Enable the label peel off mode. **Cutter Mode**: Enable the label cutter mode. **Cutter Batch:** Cut the label once at the end of the printing job. **Rewinder Mode:** Enable the label rewinder mode. **Applicator**: The printer prints a label when it receives a signal from the applicator. (GPIO only)	**Batch Mode**
Offset	Adjust media stop location. Available value setting range: -999 dots to 999 dots.	**0 dot**
Shift X	Adjust print position. Available value setting range: -999 dots to 999 dots.	**0 dot**
Shift Y		**0 dot**
Reference X	Set the origin of printer coordinate system horizontally and vertically. Available setting range: 0 dot to 999 dots.	**0 dot**
Reference Y		**0 dot**
Code page	Set the code page of international character set.	**850**
Country	Set the country code	**001**

Note: If printing from enclosed software/driver, the software/driver will send out the commands, which will overwrite the settings set from the panel.

6.3.2 ZPL2

This “ZPL2” category can set up the printer settings for ZPL2.

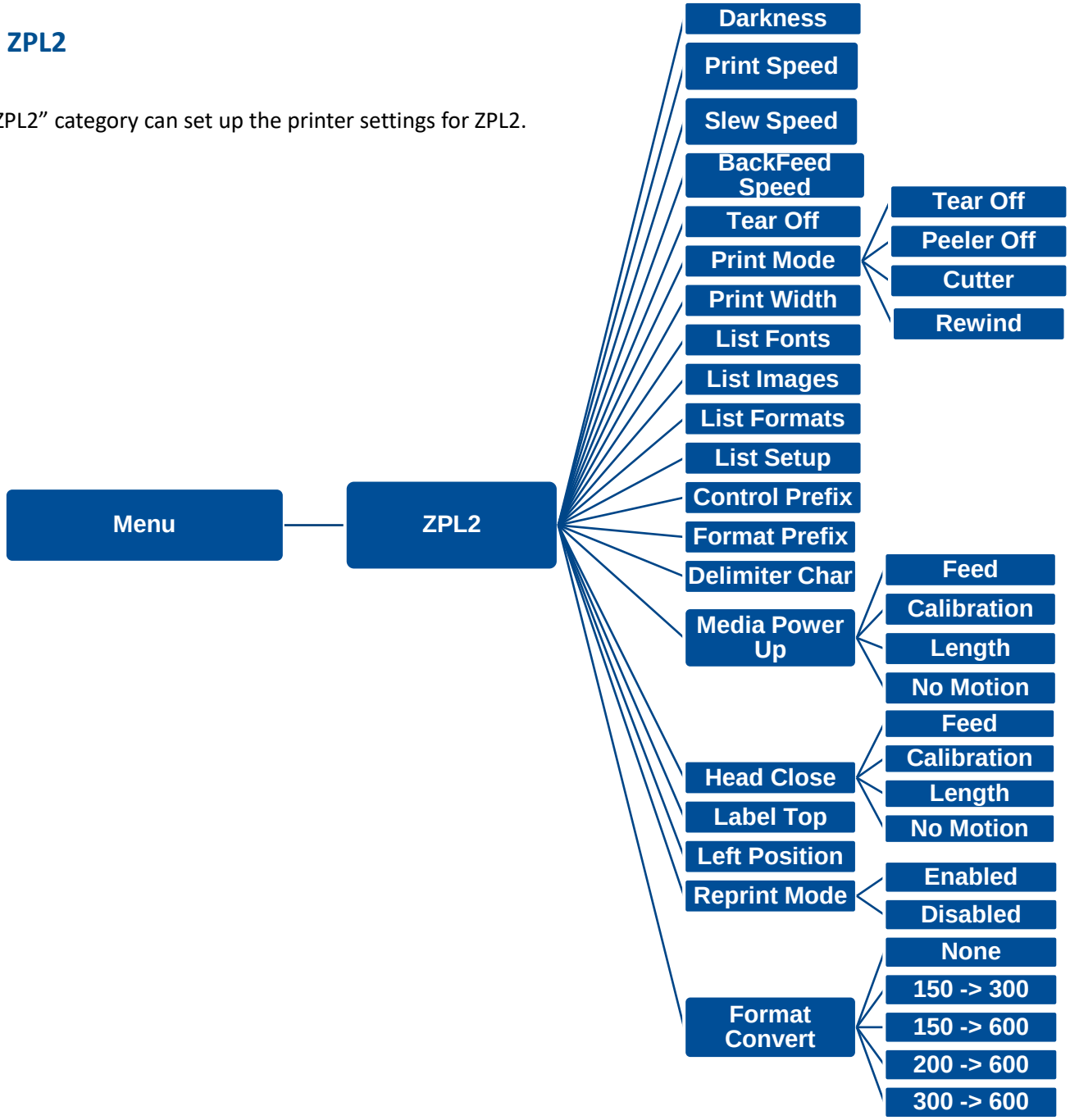

Item	Description	Default
Density	Set the printing darkness. Available setting range: 0 to 30.	**16**
Print Speed	Set the print speed. Available setting range is 2~18 for 203dpi and 2~14 for 300dpi; 1.5~6 for 300dpi	**203 dpi: 6** **300 dpi: 4**
Slew Speed	Set feed speed	**203 dpi: 6** **300 dpi: 4**
Back Speed	Set back speed	**2**
Tear Off	Adjust media stop location. Available setting value range: -120~120 dots.	**0 dot**
Print mode	Set the print mode. There are 4 modes: **Tear Off:** Next label top of form is aligned to the print head heating line location. **Peeler Off**: Enable the label peel off mode. **Cutter**: Enable the label cutter mode **Rewind**: Enable the label rewind mode **Applicator**: The printer prints a label when it receives a signal from the applicator.	**Tear Off**
Print Width	Set the print width. Available setting range: 2 ~ 999 dots.	**812**
List Fonts	Print the current fonts list from the memory devices to the label.	**N/A**
List Images	Print current printer available images list stored at the memory device to the label.	**N/A**
List Formats	Print current printer available formats list from the memory devices to the label.	**N/A**
List Setup	Print current printer configuration to the label.	**N/A**
Control Prefix	Set control prefix character.	**7E(~)**
Format Prefix	Set format prefix character.	**5E(^)**
Delimiter Char	Set delimiter character.	**2C(,)**

Item	Description	Default
Media Power Up	Set the action of the media when turning on the printer. **Feed:** Printer will advance one label. **Calibration:** Printer will make calibration. **Length:** Printer determine length and feed label. **No Motion:** Printer will not move media.	**No Motion**
Head Close	Set the action of the media when closing the print head. **Feed:** Printer will advance one label. **Calibration:** Printer will make calibration. **Length:** Printer determine length and feed label. **No Motion:** Printer will not move media.	**No Motion**
Label Top	Adjust print position vertically on the label. Value range: -120 to +120 dots.	**0**
Left Position	Adjust print position horizontally on the label. Value range: -9999 to +9999 dots.	**0**
Reprint Mode	Reprint the last label by pressing button on printer's control panel.	**Disabled**
Format Convert	Select the bitmap scaling factor. The first number is the original dots per inch (dpi) value; the second the dpi which you would like to scale.	**None**

Note: printing from other software/drive will overwrite the settings set from the panel.

1.4 Sensor

Sensor is used to calibrate the selected sensor.

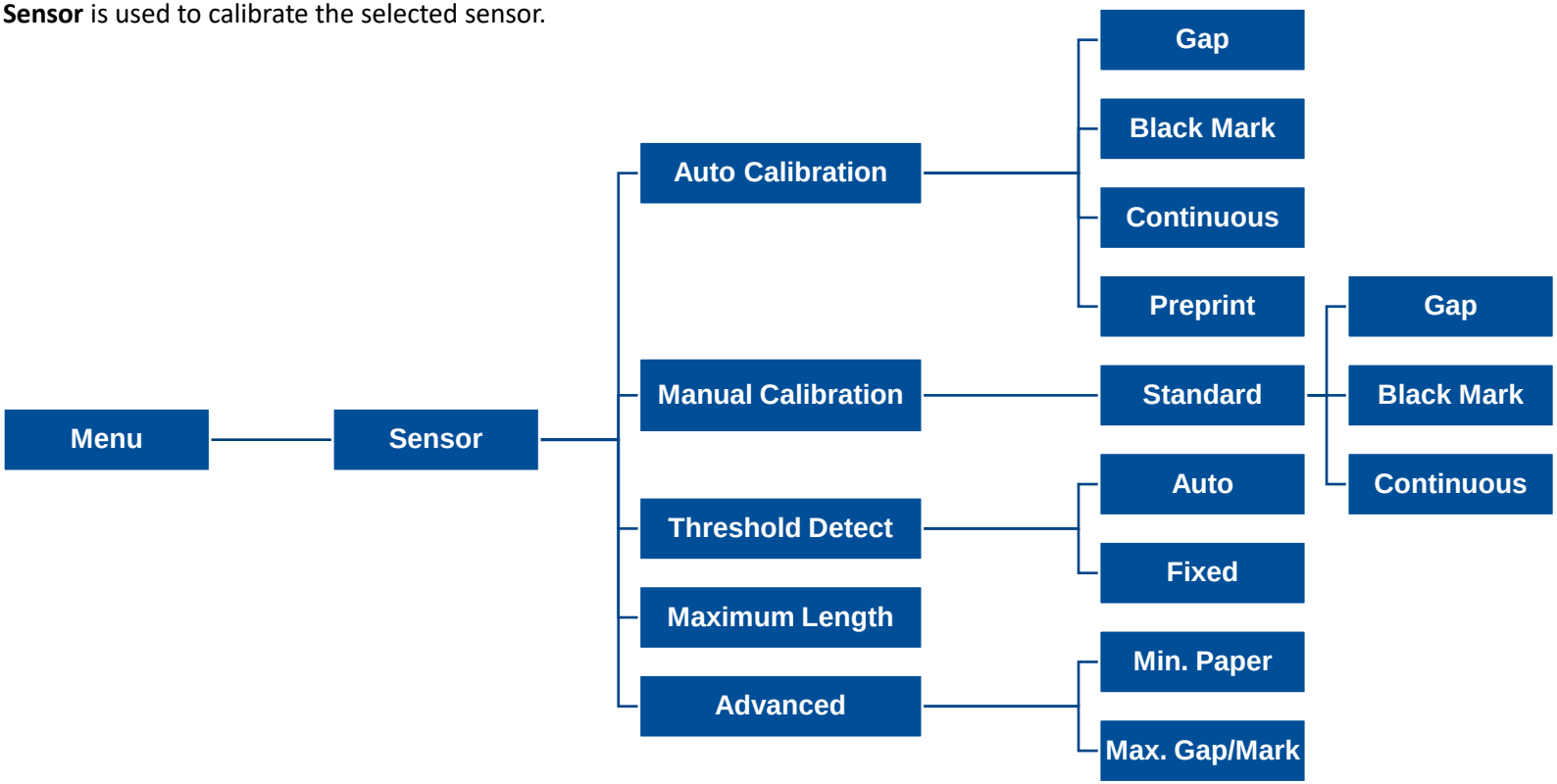

Item	Description	Default
Auto Calibration	Set the media sensor type and calibrate the selected sensor automatically.	**N/A**
Manual Calibration	In case Auto Calibration does not work, please use “Manual” function to set the paper length and gap/bline size to complete the calibration setting.	**N/A**
Threshold Detect	Set sensor sensitivity in fixed or auto.	**Auto**
Maximum Length	Set the maximum length for label calibration.	**762 mm**
Advanced	Set the minimum paper length and maximum gap/bline length for auto-calibration.	**0 mm**

1.5 Interface

Interface can set the printer interface settings.

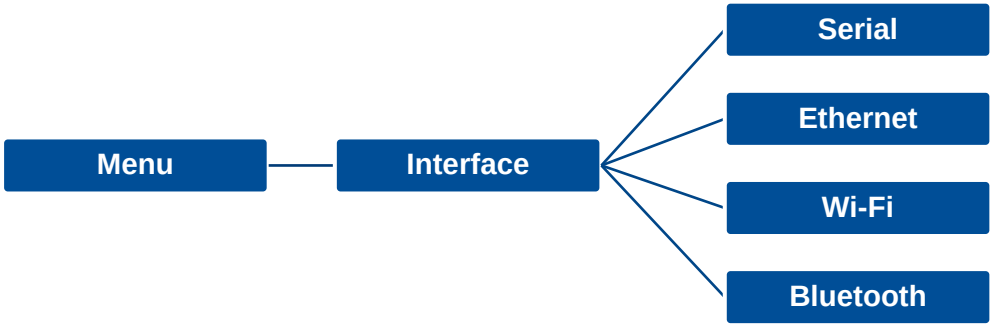

Note:

To comply with the new European RED (Radio Equipment Directive) requirements, the Network Block must be disabled before the printer's first network connection. To enable standard network functions, follow the steps below.

- **For USB setup (recommended in Europe):**
  1. Connect the printer via USB.
  2. Open **TSC Console** and go to **Functions > PRTSecure > Security Mode**.
  3. Set it to **"Standard"**.
- **For printers with LCD:**
  1. Go to **Menu > Advanced > PRTSecure**.
  2. Set Security Mode to **"Standard"**.

For detailed instructions, see the **TSC Console Utility** and **Advanced** sections.

6.5.1 Serial Comm

Serial comm can set the printer RS-232 settings.

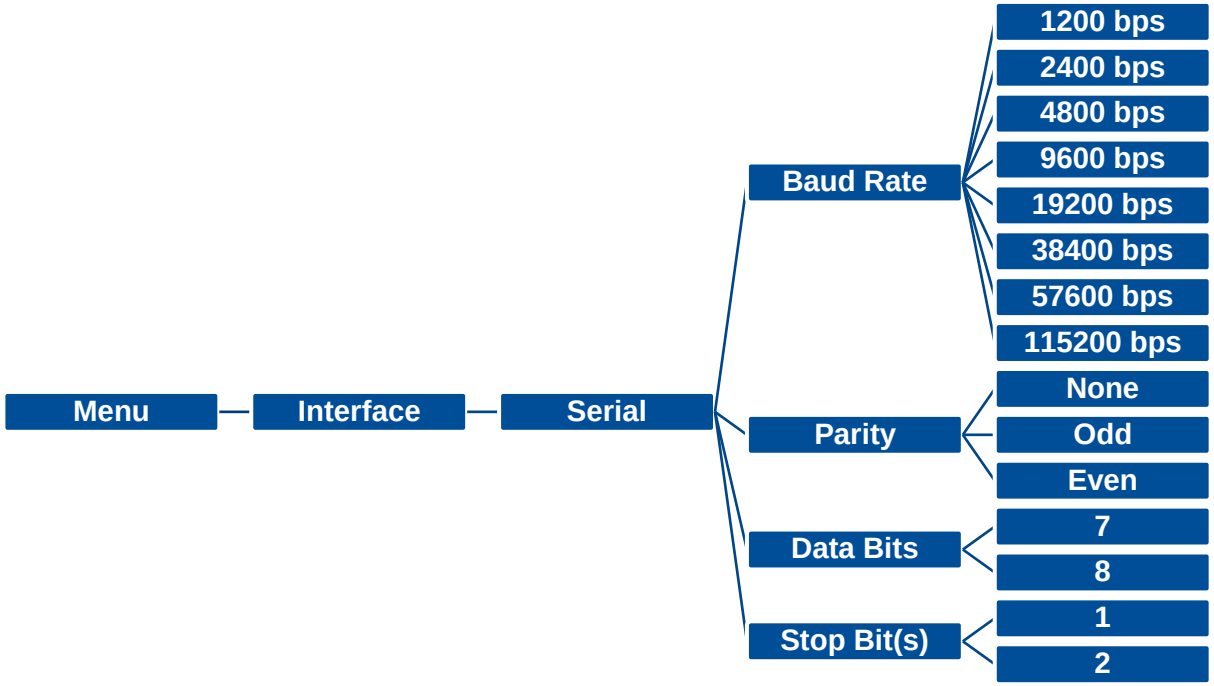

Item	Description	Default
Baud Rate	Set the RS-232 baud rate.	**9600**
Parity	Set the RS-232 parity.	**None**
Data Bits	Set the RS-232 Data Bits.	**8**
Stop Bit(s)	Set RS-232 Stop Bits.	**1**

6.5.2 Ethernet

Ethernet configures internal Ethernet configuration and checks the printer's Ethernet module status, and reset the Ethernet module.

Item	Description	Default
Status	Check the Ethernet IP address and MAC setting status.	**N/A**
Config.	**DHCP:** On or OFF the DHCP (Dynamic Host Configuration Protocol) network protocol. **Static IP:** Use this menu to set the printer's IP address, subnet mask and gateway.	**DHCP**

6.5.3 Wi-Fi

Wi-Fi can set the printer Wi-Fi settings.

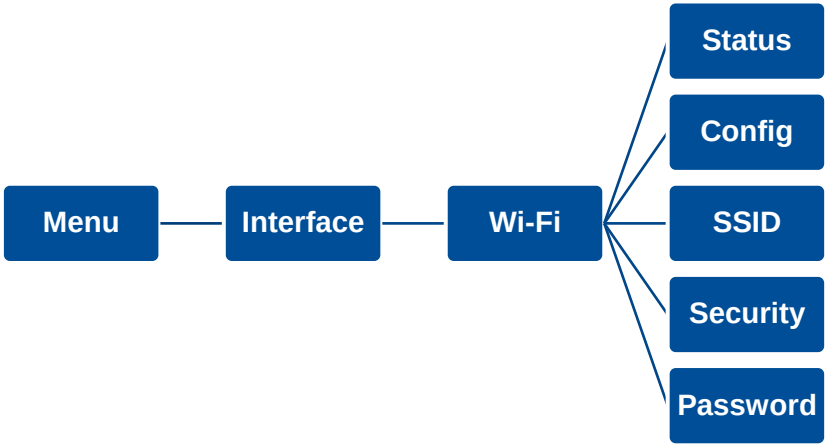

Item	Description	Default
Status	Check the Wi-Fi IP address, MAC setting status,…etc.	**N/A**
Config.	**DHCP:** ON/OFF the DHCP (Dynamic Host Configuration Protocol) network protocol. **Static IP:** Set the printer's IP address, subnet mask and gateway.	**DHCP**
SSID	Set Wi-Fi SSID.	**N/A**
Security	Set Wi-Fi security.	**Open**
Password	Set Wi-Fi password.	**N/A**

6.5.4 Bluetooth

Bluetooth can set the printer Bluetooth settings.

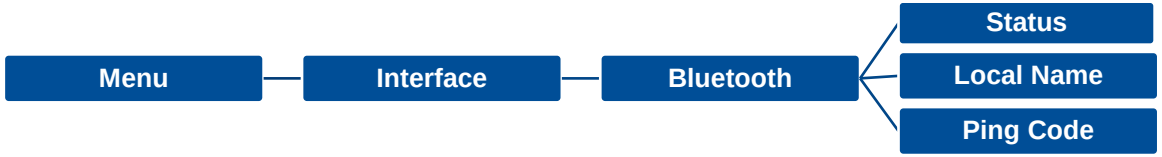

Item	Description	Default
Status	Check the Bluetooth status.	**N/A**
Local Name	Set the local name for Bluetooth.	**N/A**
Ping Code	Set the local ping code for Bluetooth.	**0000**

1.6 Advanced

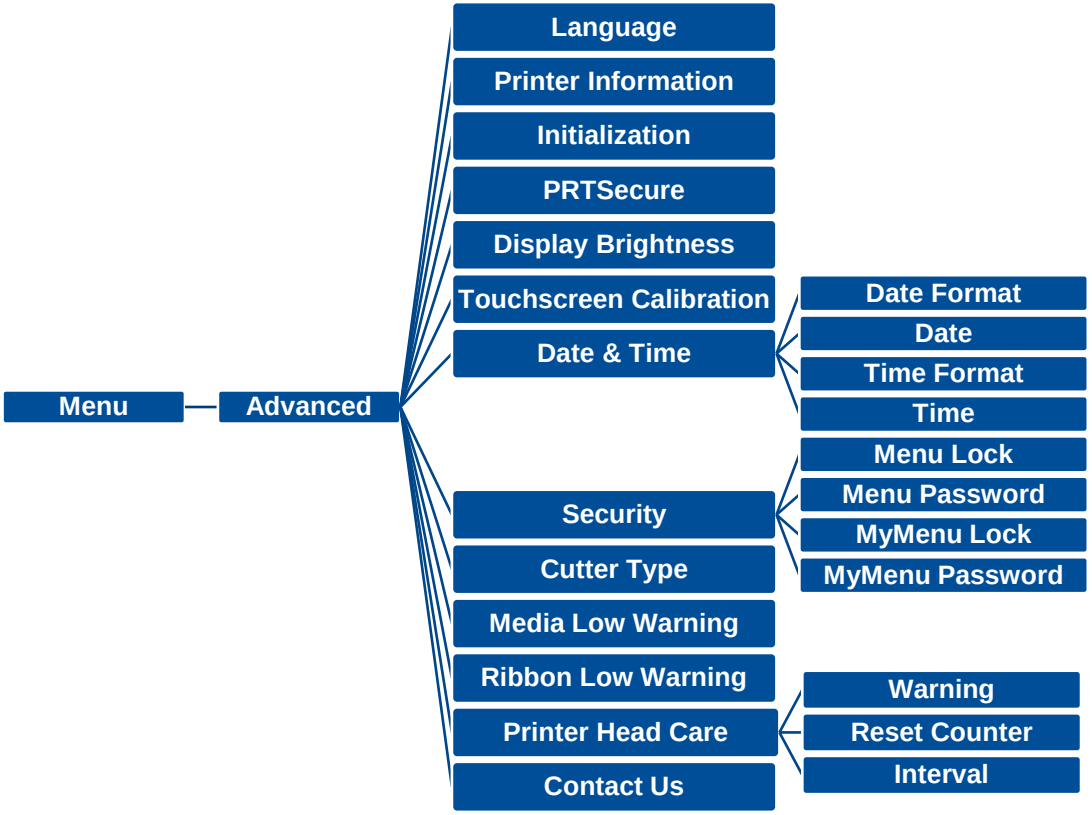

Item	Description	Default
Language	Switch the language on display.	**English**
Printer Information	Check the printer's serial number, printed mileage (m), printed labels (pcs) and cutting counter.	**N/A**
Initialization	Restore printer settings to defaults.	**N/A**

Item	Description	Default
PRTSecure	Set up the Printer Secure. • **Strict:** Enable this security setting - Network setup via network is blocked • **Standard:** Disable this security setting - Normal network setup allowed If you want to use **Strict Mode** to connect to the network, please refer to the TSC Network Security Manual for more details. Click the document link or scan the QR code below to access the manual.	**Europe Unit: Strict (Network Block enabled)**
Display Brightness	Set the brightness for display. Range: 0~100.	**50**
Touchscreen Calibration	Calibrate the touchscreen for best result.	**N/A**
Date & Time	Setup the date and time on display.	**N/A**
Security	Set the password for locking the menu or favorites. The default password is 8888.	**Disable**
Cutter Type	Set the cutter type.	**Guillotine**
Media Low Warning	Set the warning for media low %. if setting value is 10%, media capacity was lower than 10%, the % will be shown in red.	**10%**
Ribbon Low Warning	Set the warning for ribbon low. For example, if setting value is 30m, when ribbon capacity was lower than 30m, the will be shown in red.	**30M**

Item	Description	Default
Printer Head Maintn	Check print head status and to set the settings for print head care. **Warning**: Enable/disable the print head clean warning. If enable this feature, once print head has been reached the setting mileage then the warning icon will be shown on printer UI for reminding user to clean the print head. The default setting is disable. **Reset Counter**: Reset the print head clean warning mileage after cleaning print head. **Interval:** This item is used to set the expected mileage for reminding user to clean the print head. You have to enable the “TPH warning lock” for use. The default setting is 1 km. **Key sound:** This item is used to enable/disable the sound of front panel buttons.	**N/A**
Contact us	Check the contact information for tech support service	**N/A**

1.7 File Manager

File Manager is used to check the printer available memory, show the files list, delete the files or run the files that saved in the printer DRAM/Flash/Card memory.

1.8 Diagnostic

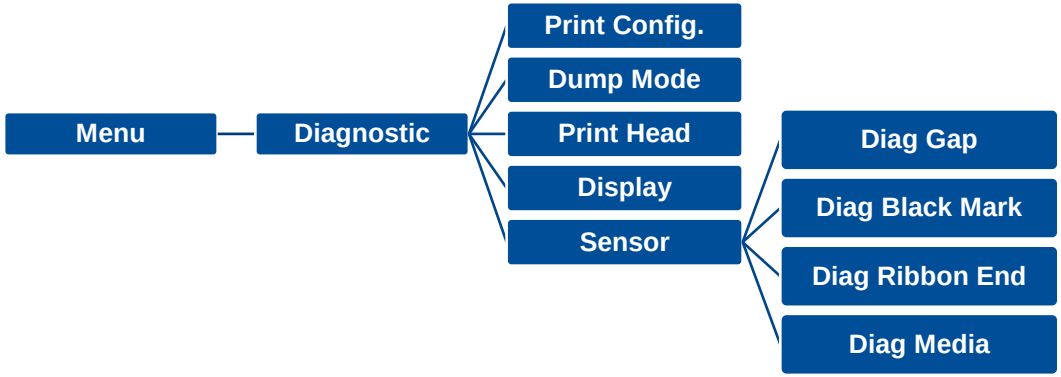

Item	Description
Print Config.	Print current printer configuration to the label. The configuration printout contains print head test pattern, which is useful for checking the dot damage on the print head heater.
Dump Mode	Captures the data from the communications port and prints out the data received by printer. In the dump mode, all characters will be printed in 2 columns. The left side characters are received from your system and right-side data are the corresponding hexadecimal value of the characters. It allows users or engineers to verify and debug the program. **Dump mode requires 4” wide paper width.**
Print Head	Check print head’s temperature and bad dots.
Display	Check LCD’s color state.
Sensor	Check sensors intensity and reading state.

1.9 Favorites

Favorites helps users build a commonly used list. Arrange the commonly used setting options by **Favorites** .

Add items: Touch and hold the item > window of **Join Favorites** will pop up > tap **Yes** to add the item to **Favorites.**

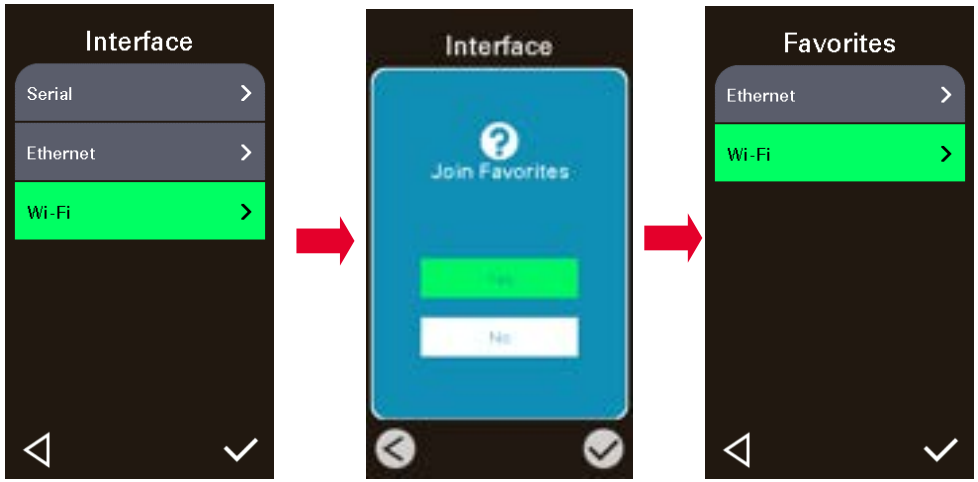

Delete items: Touch and hold the item > window of **Delete Favorites** will pop up > tap **Yes** to delete the item.

7. Troubleshooting

Problem	Possible Cause	Recovery Procedure
Power indicator does not illuminate	■ The power cord is not properly connected. ■ The power switch is closed.	■ Plug the power cord in printer and outlet. ■ Switch the printer on.
Carriage Open	■ The printer carriage is open.	■ Close the print carriage.
Not Printing	■ Check if interface cable is well connected. ■ Check if wireless or Bluetooth device is well connected. ■ The port in the Windows driver is not correct.	■ Re-connect cable to interface or change a new cable. ■ Reset the wireless device setting. ■ Select the correct printer port in the driver. ■ Clean the printhead. ■ Printhead's harness connector is not well connected with printhead. Turn off the printer and plug the connector again. ■ Check your program if there is a command - PRINT at the end of the file and there must have CRLF at the end of each command line.
No print on the label	■ Label or ribbon is loaded not correctly. ■ Use wrong type paper or ribbon	■ Follow the instructions in loading the media and ribbon. ■ Ribbon and media are not compatible. ■ Verify the ribbon-inked side. ■ The print density setting is incorrect.
No Ribbon	■ Running out of ribbon. ■ The ribbon is installed incorrectly.	■ Supply a new ribbon roll. ■ Refer to user's manual to reinstall the ribbon.
No Paper	■ Running out of label. ■ The label is installed incorrectly. ■ Gap/black mark sensor is not calibrated.	■ Supply a new label roll. ■ Refer to user's manual to reinstall the label roll. ■ Calibrate the gap/black mark sensor.
Paper Jam	■ Gap/black mark sensor is not set properly. ■ Make sure label size is set properly.	■ Calibrate the media sensor. ■ Set media size correctly.

Problem	Possible Cause	Recovery Procedure
	■ Labels may be stuck inside the printer mechanism.	■ Remove the stuck label inside the printer mechanism.
Take Label	■ Peel function is enabled.	■ If peeler module is installed, please remove the label. ■ If there is no peeler module in front of the printer, please switch off the printer and install it. ■ Check if the connector is plugging correctly.
Can't downloading the file to memory (FLASH / DRAM/CARD)	■ The space of memory is full.	■ Delete unused files in the memory.
Poor Print Quality	■ Ribbon and media is loaded incorrectly. ■ Dust or adhesive accumulation on the print head. ■ Print density is not set properly. ■ Printhead element is damaged. ■ Ribbon and media are incompatible. ■ The printhead pressure is not set properly.	■ Reload the supply. ■ Clean the print head. ■ Clean the platen roller. ■ Adjust the print density and print speed. ■ Run printer self-test and check the print head test pattern if there is dot missing in the pattern. ■ Change proper ribbon or proper label media. ■ Adjust the printhead pressure adjustment knob. ■ The release lever does not latch the printhead properly.
Missing printing on the left or right side of label	■ Wrong label size setup.	■ Set the correct label size.
Gray line on the blank label	■ The print head is dirty. ■ The platen roller is dirty.	■ Clean the print head. ■ Clean the platen roller. ■ (Please refer to chapter 8)
Irregular printing	■ The printer is in Hex Dump mode. ■ The RS-232 setting is incorrect.	■ Turn off and on the printer to skip the dump mode. ■ Re-set the RS-232 setting.
Label feeding is not stable (skew) when printing	■ The media guide does not touch the edge of the media.	■ If the label is moving to the right side, please move the label guide to left. ■ If the label is moving to the left side, please move the label

Problem	Possible Cause	Recovery Procedure
		guide to right.
Skip labels when printing	■ Label size is not specified properly. ■ Sensor sensitivity is not set properly. ■ The media sensor is covered with dust.	■ Check if label size is setup correctly. ■ Calibrate the sensor by Auto Gap or Manual Gap options. ■ Clear the GAP/Black mark sensor by blower.
Wrinkle Problem	■ Printhead pressure is incorrect. ■ Ribbon installation is incorrect. ■ Media installation is incorrect. ■ Print density is incorrect. ■ Media feeding is incorrect.	■ Please refer to the chapter 4. ■ Please set the suitable density to have good print quality. ■ Make sure the label guide to touch the edge of the media guide.
RTC time is incorrect when reboot the printer	■ The battery has run down.	■ Check if there is a battery on the main board.
The left side printout position is incorrect	■ Wrong label size setup. ■ The parameter Shift X in LCD menu is incorrect.	■ Set the correct label size. ■ Press [Menu] → [Setting] → [Shift X] to fine tune the parameter of Shift X.
The printing position of small label is incorrect	■ Media sensor sensitivity is not set properly. ■ Label size is incorrect. ■ The parameter Shift Y in the LCD menu is incorrect. ■ The vertical offset setting in the driver is incorrect.	■ Calibrate the sensor sensitivity again. ■ Set the correct label size and gap size. ■ Press [Menu] → [Setting] → [Shift Y] → to fine tune the parameter of Shift Y. ■ Set the vertical offset in the driver if you’re using BarTender.
LCD panel is dark and keys are not working	■ The cable between main PCB and LCD panel is loose.	■ Check if the cable between main PCB and LCD is secured or not.
LCD panel is dark but the LEDs are light	■ The printer initialization is unsuccessful.	■ Turn OFF and ON the printer again. ■ Initialize the printer.
Ribbon end sensor doesn’t work	■ The ribbon sensor hole is covered with dust.	■ Clear the dust in the sensor hole by the blower.

Problem	Possible Cause	Recovery Procedure
Cutter is not working	■ The connector is loose.	■ Plug in the connect cable correctly.

8. Maintenance

This session presents the clean tools and methods to maintain the printer.

- **For Cleaning**

  Depending on the media used, the printer may accumulate residues (media dust, adhesives, etc.) as a by-product of normal printing. To maintain the best printing quality, you should remove these residues by cleaning the printer periodically. Regularly clean the print head and supply sensors once change a new media to keep the printer at the optimized performance and extend printer life.

- **For Disinfecting**

  Sanitize your printer to protect yourself and others and can help prevent the spread of viruses.

- **Important**

  - Set the printer power switch to O (Off) prior to performing any cleaning or disinfecting tasks. Leave the power cord connected to keep the printer grounded and to reduce the risk of electrostatic damage.
  - Do not wear rings or other metallic objects while cleaning any interior area of the printer.
  - Use only the cleaning agents recommended in this document. Use of other agents may damage the printer and void its warranty.
  - Do not spray or drip liquid cleaning solutions directly into the printer. Apply the solution on a clean lint-free cloth and then apply the dampened cloth to the printer.
  - Do not use canned air in the interior of the printer as it can blow dust and debris onto sensors and other critical components.
  - Only use a vacuum cleaner with a nozzle and hose that are conductive and grounded to drain off static build up.
  - All reference in these procedures for use of isopropyl alcohol requires that a 99% or greater isopropyl alcohol content be used to reduce the risk of moisture corrosion to the printhead.
  - Do not touch printhead by hand. If you touch it careless, please use 99% Isopropyl alcohol to clean it.
  - Always taking personal precaution when using any cleaning agent.

Cleaning Tools

- Cotton swab
- Lint-free cloth
- Brush with soft non-metallic bristles
- Vacuum cleaner
- 75% Ethanol (for disinfecting)
- 99% Isopropyl alcohol (for printhead and platen roller cleaning)
- Genuine printhead cleaning pen
- Mild detergent (without chlorine)

Cleaning Process:

Printer Part	Method	Interval
Print Head	**I.** Always turn off the printer before cleaning the printhead. **II.** Allow the printhead to cool for at least one minute. **III.** Use a cotton swab and 99% Isopropyl Alcohol or genuine print head cleaning pen to clean the print head surface.	Clean the print head when changing a new label roll.
Platen Roller	**I.** Turn off the printer. **II.** Rotate the platen roller and wipe it thoroughly with the lint-free 99% Isopropyl Alcohol.	Clean the platen roller when changing a new label roll
Peel Bar	Use the lint-free cloth with 99% Isopropyl Alcohol to wipe it.	As needed
Sensor	Use brush with soft non-metallic bristles or a vacuum cleaner, to remove paper dust. Clean upper and lower media sensors to ensure reliable Top of Form and Paper Out sensing.	Monthly
Exterior	Clean the exterior surfaces with a clean, lint-free cloth (water-dampened cloth). If necessary, use a mild detergent or desktop cleaning solution then use the 75% Ethanol to wipe it.	As needed
Interior	Clean the interior of the printer by removing any dirt and lint with a vacuum cleaner, as described above, or use a brush with soft non-metallic bristles then use the 75% Ethanol to wipe it.	As needed

9. Agency Compliance and Approvals

Note:

There may have certification differences in the series models, please refer to product label for accuracy.

EN 55032, Class A
EN 55024
EN 55035
EN 62368-1
This is a class A product. In a domestic environment this product may cause radio interference in which case the user may be required to take adequate measures.

FCC part 15B, Class A
ICES-003, Class A

This equipment has been tested and found to comply with the limits for a Class A digital device, pursuant to Part 15 of the FCC Rules. These limits are designed to provide reasonable protection against harmful interference when the equipment is operated in a commercial environment.
This equipment generates, uses, and can radiate radio frequency energy and, if not installed and used in accordance with the manufacturer's instruction manual, may cause harmful interference with radio communications. Operation of this equipment in a residential area is likely to cause harmful interference, in which case you will be required to correct the interference at your own expense.

This Class A digital apparatus complies with Canadian ICES-003.
Cet appareil numérique de la classe A est conform à la norme NMB-003 du Canada.

This device complies with Part 15 of the FCC Rules. Operation is subject to the following two conditions: (1) This device may cause harmful interference, and (2) this device must accept any interference received, including interference that may cause undesired operation.

AS/NZS CISPR 22, Class A

	UL 60950-1 (2nd Edition) CSA C22.2 No. 60950-1-07 (2nd Edition) UL 62368-1, 2nd Edition CAN/CSA C22.2 No. 62368-1-14, 2nd Edition
	Energy Star for Imaging Equipment Version 3.0
Mexico Registration	UL 60950-1
	EN 62368-1
	KN 32 KN 35 KN 60950-1 이 기기는 업무용(A 급) 전자파적합기기로서 판매자 또는 사용자는 이 점을 주의하시기 바라며, 가정외의 지역에서 사용하는 것을 목적으로 합니다.
	GB 17625.1-2022; GB 4943.1-2022; GB/T 9254.1-2021(A 级) 警告：在居住环境中，运行此设备可能会造成无线电干扰。
	IS 13252(Part 1)/ IEC 60950-1
	TP TC 004 TP TC 020

	CNS 13438 CNS 14336-1 CNS 15663
	IEC 60950-1

Important safety instructions:

1. Read all of these instructions and keep them for later use.
2. Follow all warnings and instructions on the product.
3. Disconnect the power plug from the AC outlet before cleaning or if fault happened.
   Do not use liquid or aerosol cleaners. Using a damp cloth is suitable for cleaning.
4. The mains socket shall be installed near the equipment and easily accessible.
5. The unit must be protected against moisture.
6. Ensure the stability when installing the device, Tipping or dropping could cause damage.
7. Make sure to follow the correct power rating and power type indicated on marking label provided by manufacture.
8. Please refer to user manual for maximum operation ambient temperature.

WARNING:

Moving parts, keep fingers and other body parts away.

CAUTION:

(For equipment with RTC (CR2032) battery or rechargeable battery pack)

Risk of explosion if battery is replaced by an incorrect type.

Dispose of used batteries according to the Instructions as below.

1. DO NOT throw the battery in fire.
2. DO NOT short circuit the contacts.
3. DO NOT disassemble the battery.

4. DO NOT throw the battery in municipal waste.
5. The symbol of the crossed out wheeled bin indicates that the battery should not be placed in municipal waste.

CAUTION:

Hot surface for printhead. Do not touch the printhead before it cooling.

WARNING:

Remove the power from AC inlet before opening the media cover for cleaning or repairing faults. After cleaning or fixing faults, media cover closing before power connecting to AC inlet.

CAUTION:

Any changes or modifications not expressly approved by the grantee of this device could void the user's authority to operate the equipment.

CE Statement:

This equipment complies with EU radiation exposure limits set forth for an uncontrolled environment. This equipment should be installed and operated with minimum distance 20 cm between the radiator & your body.

All operational modes:

2.4GHz: 802.11b, 802.11g, 802.11n (HT20), 802.11n (HT40)

5GHz: 802.11a, 802.11ac.

The frequency, mode and the maximum transmitted power in EU are listed below:

2412 MHz – 2472 MHz: 19.72 dBm (EIRP)(Wi-Fi)

5180 MHz – 5700 MHz: 22.5 dBm (EIRP)(Wi-Fi)

2402 MHz – 2480 MHz: 7.4 dBm (EIRP)(Bluetooth)

2402 MHz – 2480 MHz: 2.35 dBm (EIRP)(Bluetooth-BLE)

Requirements in AT/BE/BG/CZ/DK/EE/FR/DE/IS/IE/IT/EL/ES/CY/LV/LI/LT/LU/HU/MT/NL/NO/PL/PT/RO/SI/SK/TR/FI/SE/CH/UK/HR.

5150MHz~5350MHz is for indoor use only.

5150-5350MHz for Only indoor use

5470-5725MHz for indoor/outdoor use

Restrictions In AZE

National restrictions information is provided below

Frequency Band	Country	Remark
5150-5350MHz	**Azerbaijan**	**No license needed if used indoor and power not exceeding 30mW**
5470-5725MHz		

Hereby, TSC Auto ID Technology Co., Ltd. declares that the radio equipment type [Wi-Fi] IEEE 802.11 a/b/g/n/ac is in compliance with Directive 2014/53/EU

The full text of the EU declaration of conformity is available at the following internet address: http://www.tscprinters.com/cms/theme/index-39.html

Canada, Industry Canada (IC) Notices

This Class B digital apparatus complies with Canadian ICES-003 and RSS-210.

Operation is subject to the following two conditions: (1) this device may not cause interference, and (2) this device must accept any interference, including interference that may cause undesired operation of the device.

Radio Frequency (RF) Exposure Information

The radiated output power of the Wireless Device is below the Industry Canada (IC) radio frequency exposure limits. The Wireless Device should be used in such a manner such that the potential for human contact during normal operation is minimized.

Canada, avis de l'Industry Canada (IC)

Cet appareil numérique de classe B est conforme aux normes canadiennes ICES-003 et RSS-210.

Son fonctionnement est soumis aux deux conditions suivantes : (1) cet appareil ne doit pas causer d'interférence et (2) cet appareil doit accepter toute interférence, notamment les interférences qui peuvent affecter son fonctionnement.

NCC 警語:

經型式認證合格之低功率射頻電機，非經許可，公司、商號或使用者均不得擅自變更頻率、加大功率或變更原設計之特性及功能。(即低功率電波輻射性電機管理辦法第十二條)

低功率射頻電機之使用不得影響飛航安全及干擾合法通信；經發現有干擾現象時，應立即停用，並改善至無干擾時方得繼續使用。

前項合法通信，指依電信法規定作業之無線電通信。低功率射頻電機須忍受合法通信或工業、科學及醫療用電波輻射性電機設備之干擾。(即低功率電波輻射性電機管理辦法第十四條)

BSMI Class A 警語:

這是甲類的資訊產品，在居住的環境使用中時，可能會造成射頻干擾，在這種情況下，使用者會被要求採取某些適當的對策。

單元Unit	限用物質及其化學符號 Restricted substances and its chemical symbols					
	鉛Lead (Pb)	汞Mercury (Hg)	鎘Cadmium (Cd)	六價鉻 Hexavalent chromium (Cr^{+6})	多溴聯苯 Polybrominated biphenyls (PBB)	多溴二苯醚 Polybrominated diphenyl ethers (PBDE)
內外塑膠件	o	o	o	o	o	o
內外鐵件	-	o	o	o	o	o
滾輪	o	o	o	o	o	o
銘版	o	o	o	o	o	o
電路板	-	o	o	o	o	o
晶片電阻	-	o	o	o	o	o
積層陶瓷表面黏著電容	o	o	o	o	o	o
集成電路-IC	-	o	o	o	o	o
電源供應器	o	o	o	o	o	o
印字頭	-	o	o	o	o	o
馬達	-	o	o	o	o	o
液晶顯示器	-	o	o	o	o	o
插座	-	o	o	o	o	o
線材	-	o	o	o	o	o

備考 1.〝超出 0.1 wt %〞及〝超出 0.01 wt %〞係指限用物質之百分比含量超出百分比含量基準值。

Note 1：“Exceeding 0.1 wt %” and “exceeding 0.01 wt %” indicate that the percentage content of the restricted substance exceeds the reference percentage value of presence condition.

備考 2.〝o〞係指該項限用物質之百分比含量未超出百分比含量基準值。

Note 2：“o” indicates that the percentage content of the restricted substance does not exceed the percentage of reference value of presence.

備考 3.〝 - 〞係指該項限用物質為排除項目。

Note 3：The “–” indicates that the restricted substance corresponds to the exemption.

Revision History

Date	Content	Editor
2023/08/10	Removed CD disk from the packing list, page 4.	Peter Yao
2024/10/9	- Modified the section 2.3 (Operator Control) - Modified the section 3.2 (Loading the Ribbon) - Added the section 3.3 (Removing the Used Ribbon) - Modified the section 3.4 (Loading the Media) - Added the section 4.2 (Ribbon Tension Adjustment Knob) - Modified the section 4.3 (Mechanism Fine Adjustment to Avoid Ribbon Wrinkle) - Added the section 2.4 (Power-on Utilities)	Camille Pao
2025/5/14	Update the Trademark and Copyright Notice info.	Camille Pao
2025/7/21	- Update the CCC info. - Add rMQR code	Camille Pao
2025/8/13	- Update the Product Specification (add PDF Print Dongle) - Updated the "LCD Control Panel Icon Indication" section (add PDF Print Dongle icon) - Add the "Using the PDF Print Dongle" section	Camille Pao
2025/11/10	- Update the TSC Console Utility section - Add a note to Interface section (RED) - Update the Advance section for adding PRTSecure item.	Camille Pao

www.tscprinters.com