CITIZEN

LINE THERMAL PRINTER

MODEL CL-E300/CL-E303/ CL-E300EX/CL-E303EX/ CL-H300SV

User's Manual

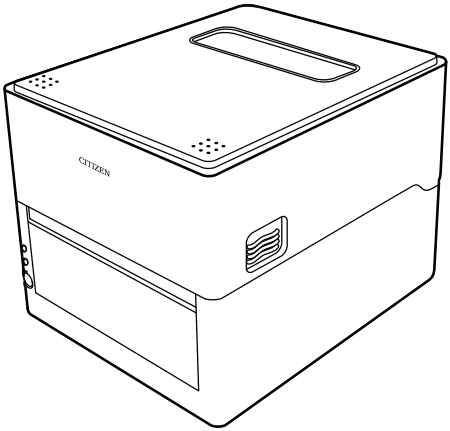

CITIZEN SYSTEMS JAPAN CO., LTD.

WEEE MARK

En If you want to dispose of this product, do not mix it with general household waste. There is a separate collection systems for used electronics products in accordance with legislation under the WEEE Directive and is effective only within European Union.

Ge Wenn Sie dieses Produkt entsorgen wollen, dann tun Sie dies bitte nicht zusammen mit dem Haushaltsmüll. Es gibt im Rahmen der WEEE-Direktive innerhalb der Europäischen Union gesetzliche Bestimmungen für separate Sammelsysteme für gebrauchte elektronische Geräte und Produkte.

Fr Si vous souhaitez vous débarrasser de cet appareil, ne le mettez pas à la poubelle avec vos ordures ménagères. Il existe un système de récupération distinct pour les vieux appareils électroniques conformément à la législation WEEE sur le recyclage des déchets des équipements électriques et électroniques qui est uniquement valable dans les pays de l'Union européenne.

Les appareils et les machines électriques et électroniques contiennent souvent des matières dangereuses pour l'homme et l'environnement si vous les utilisez et vous vous en débarrassez de façon inappropriée.

Sp Si desea deshacerse de este producto, no lo mezcle con residuos domésticos de carácter general. Existe un sistema de recogida selectiva de aparatos electrónicos usados, según establece la legislación prevista por la sobre residuos de aparatos eléctricos y electrónicos (RAEE), vigente únicamente en la Unión Europea.

It Se desiderate gettare via questo prodotto, non mescolatelo ai rifiuti generici di casa. Esiste un sistema di raccolta separato per i prodotti elettronici usati in conformità alla legislazione RAEE, valida solo all'interno dell'Unione Europea.

Du Deponeer dit product niet bij het gewone huishoudelijk afval wanneer u het wilt verwijderen. Er bestaat ingevolge de WEEE-richtlijn een speciaal wettelijk voorgeschreven verzamelsysteem voor gebruikte elektronische producten, welk alleen geldt binnen de Europese Unie.

Da Hvis du vil skille dig af med dette produkt, må du ikke smide det ud sammen med dit almindelige husholdningsaffald. Der findes et separat indsamlingssystem for udtjente elektroniske produkter i overensstemmelse med lovgivningen under WEEE-direktivet, som kun er gældende i den Europæiske Union.

Por Se quiser deitar fora este produto, não o misture com o lixo comum. De acordo com a legislação que decorre da Directiva REEE – Resíduos de Equipamentos Eléctricos e Electrónicos, existe um sistema de recolha separado para os equipamentos electrónicos fora de uso, em vigor apenas na União Europeia.

Pol Jeżeli zamierzasz pozbyć się tego produktu, nie wyrzucaj go razem ze zwykłymi domowymi odpadkami. Według dyrektywy WEEE obowiązującej w Unii Europejskiej dla używanych produktów elektronicznych należy stosować oddzielne sposoby utylizacji.

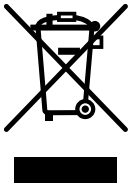

Compliance Statement for European Users

CE marking shows conformity to the following criteria and provisions:

Low Voltage Directive (2014/35/EU), EMC Directive (2014/30/EU), and RoHS directive (2011/65/EU)

Full text of the EU declaration of conformity is available at the following internet address:

http://www.citizen-systems.co.jp/en/printer/download/eu_doc.html

FCC Compliance Statement for American Users

FCC Related Information

This equipment has been tested and found to comply with the limits for a **Class B** digital device, pursuant to Part 15 of the FCC Rules.

These limits are designed to provide reasonable protection against harmful interference in a residential installation. This equipment generates, uses and can radiate radio frequency energy and, if not installed and used in accordance with the instructions, may cause harmful interference to radio communications.

However, there is no guarantee that interference will not occur in a particular installation. If this equipment does cause harmful interference to radio or television reception, which can be determined by turning the equipment off and on, the user is encouraged to try to correct the interference by one or more of the following measures:

- Reorient or relocate the receiving antenna.
- Increase the separation between the equipment and receiver.
- Connect the equipment into an outlet on a circuit different from that to which the receiver is connected.
- Consult the dealer or an experienced radio/TV technician for help.

Pursuant to FCC regulations, you are cautioned that any changes or modifications not expressly approved in this manual could void your authority to operate this equipment.

Sicherheitshinweis

Die Steckdose zum Anschluß dieses Druckers muß nahe dem Gerät angebracht und leicht zugänglich sein.

EMI Compliance Statement for Canadian Users

This **Class B** Information Technology Equipment (ITE) complies with Canadian CAN ICES-3(B)/NMB-3(B).

This equipment generates and uses radio frequency energy and if not installed and used properly, that is, in strict accordance with the manufacturer's instructions, may cause interference to radio and television reception. This Information Technology Equipment (ITE) does not exceed the **Class B** limits for radio noise emissions from digital apparatus set out in the Radio Interference Regulations of the Canadian Department of Communications. This equipment is designed to provide reasonable protection against such interference in a residential installation.

However, there is no guarantee that interference will not occur in a particular installation. If this equipment does cause interference to radio or television reception, which can be determined by turning the equipment off and on, the user is encouraged to try to correct the interference by one or more of the following measures:

- Reorient or relocate the receiving antenna.
- Increase the separation between the equipment and receiver.
- Connect the equipment into an outlet on a circuit different from that to which the receiver is connected.
- Consult the dealer or an experienced radio/TV technician for help.

État de conformité EMI à l'usage des utilisateurs Canadiens

Cet Équipements informatiques (EI) de la **classe B** est conforme à la norme CAN ICES-3(B)/NMB-3(B) du Canada.

Cet équipment produit et utilise l'énergie à radiofréquences et s'iln'est pas installé et utilisé correctment, c'esst à dire en accord strict avec les instructions du fabricant, il risque de provoquer des intérferences avec la réception de la radio et de latélévision.

Le présent Équipements informatiques (EI) n'émet pas de bruite radio électriques dépassant les limites applicables aux appareils numériques de la **classe B** prescrites dans le Réglement sur le brouillage radioélectrique édicté par le ministère des Communications du Canada.

Cet équipment est conçu pour fournir une protection satisfaisante contre de telles interférences dans une installation résidentielle.

Cependant, il n'y a pas de garantie contre les interférences avec les réceptions radio ou télévision, provoquées par la mise en et hors circuit de l'équipment; aussi, il est demandé a l'utilisateur d'essayer de corriger l'interférence par l'une ou plus des mesures suivantes:

- Réorienter l'antenne de réception.
- Installer l'ordinateur autre part, par égard pour le récepteur.

- Brancher l’ordinateur dans une prise de courant différente de façon à ce que l’ordinateur et le récepteur soient branchés sur des circuits différents.
- Consulter le revendeur ou un technicien radio/ TV expérimenté pour toute assistance.

GENERAL PRECAUTIONS

- Before using this product, be sure to read through this manual. After having read this manual, keep it in a safe, readily accessible place for future reference.
- The information contained herein is subject to change without prior notice.
- Reproduction or transfer of part or all of this document in any means is prohibited without permission from Citizen Systems.
- Note that Citizen Systems is not responsible for any operation results regardless of omissions, errors, or misprints in this manual.
- Note that Citizen Systems is not responsible for any trouble caused as a result of using options or consumables that are not specified in this manual.
- Except explained elsewhere in this manual, do not attempt to service, disassemble, or repair this product.
- Citizen Systems Japan Co., Ltd. shall not be liable for damages caused by improper or incorrect usage or by the usage environment.
- Data is basically for temporary use and not stored for an extended period of time or permanently. Please note that Citizen Systems is not responsible for damage or lost profit resulting from the loss of data caused by accidents, repairs, tests or other occurrences.
- If you find omissions, errors, or have questions, please contact your Citizen Systems dealer.

NOTICE

IN NO EVENT SHALL CITIZEN (INCLUDING ANY OF ITS PARENT, SUBSIDIARY OR AFFILIATED COMPANIES) BE LIABLE TO PURCHASER OR OTHERS FOR ANY COLLATERAL, CONSEQUENTIAL, INDIRECT, INCIDENTAL, GENERAL OR EXEMPLARY DAMAGES, INCLUDING WITHOUT LIMITATION ANY DAMAGES INCURRED AS OR IN CONNECTION WITH ANY LOSS OF USE, DATA, REVENUES OR PROFITS, ARISING OUT OF OR CONNECTED IN ANY WAY WITH THE PURCHASE OR USE OF ITS PRINTER PRODUCTS (INCLUDING PARTS, SUPPLIES, SOFTWARE, FIRMWARE, OR OTHER ITEMS OR SERVICES SOLD OR LICENSED BY IT), HOWSOEVER ARISING AND REGARDLESS OF THE FORM OF ACTION (INCLUDING NEGLIGENCE) AND WHETHER CITIZEN HAS BEEN INFORMED OF THE POSSIBILITY THEREOF.

WARRANTY: TERMS AND CONDITIONS OF ANY WARRANTY APPLICABLE TO THIS AND OTHER CITIZEN PRODUCTS, TOGETHER WITH OTHER USEFUL INFORMATION ABOUT CITIZEN PRODUCTS AND SERVICES, CAN BE FOUND AT THE CITIZEN (U.S./CSA) WEBSITE:

https://www.citizen-systems.com/us/

THE WARRANTY, IF ANY, APPLICABLE TO ANY CITIZEN PRODUCT AND SERVICE SHALL BE THAT OF THE APPLICABLE CITIZEN SELLING ENTITY, IN EFFECT ON THE DATE OF PRODUCT OR SERVICE PURCHASE.

Use of the Made for Apple badge means that an accessory has been designed to connect specifically to the Apple product(s) identified in the badge and has been certified by the developer to meet Apple performance standards.

Apple is not responsible for the operation of this device or its compliance with safety and regulatory standards.

Please note that the use of this accessory with an Apple product may affect wireless performance.

- Apple, Apple TV, Apple Watch, iPad, iPad Air, iPad Pro, iPhone, and Lightning are trademarks of Apple Inc., registered in the U.S. and other countries. tvOS is a trademark of Apple Inc. The trademark "iPhone" is used in Japan with a license from Aiphone K.K.
- CITIZEN is a registered trademark of Citizen Watch Co., Ltd.
- QR Code is a registered trademark of DENSO WAVE INCORPORATED.
- Ethernet is a registered trademark of Fuji Xerox Corporation.
- Bluetooth® is a registered trademark of Bluetooth-SIG Inc.
- Android is registered trademarks of Google Inc, in the United States and/or other countries.
- Datamax® is a registered trademark of Honeywell International Inc.
- Maxi Code is a registered trademark of UPS.
- Zebra®, Eltron®, ZPL2™, and EPL2™ are registered trademarks of ZIH Corp., USA
- PDF417 is a trademark or registered trademark of Motorola, Inc. in the U.S. and other countries.
- TrueType™ is a trademark of Apple Inc.
- BarTender is a registered trademark of SEAGULL SCIENTIFIC, INC.
- All other trademarks are the property of their respective owners.
- Citizen Systems use these trademarks in accordance with the license of relevant owners.

Copyright© CITIZEN SYSTEMS JAPAN CO., LTD. 2020

SAFETY PRECAUTIONS...WHICH SHOULD BE STRICTLY OBSERVED

Before using this product for the first time, carefully read these SAFETY PRECAUTIONS. Improper handling may result in accidents (fire, electric shock or injury).

In order to prevent injury to operators, third parties, or damage to property, special warning symbols are used in the User's Manual to indicate important items to be strictly observed.

- After having read this Manual, keep it in a safe, readily accessible place for future reference.
- Some of the descriptions contained in this manual may not be relevant to some printer models.

The following describes the degree of hazard and damage that could occur if the printer is improperly operated by ignoring the instructions indicated by the warning symbols. Be sure to read this information carefully.

⚠ WARNING
Neglecting precautions indicated by this symbol may result in fatal or serious injury.

⚠ CAUTION
Neglecting precautions indicated by this symbol may result in injury or damage to property.

⚠ This symbol is used to alert your attention to important items.

Warnings

⚠ WARNING

■ **Do not perform any of the following actions as they may result in damage or malfunction of the device, overheating, the generation of smoke, fire, or electric shock. If the device is damaged or defective, turn off the power, disconnect the power plug from the electrical outlet, and contact your retailer.**

- Do not step on, drop, hit, or otherwise subject the device to significant force or impact.
- Do not use the device in environments of poor ventilation or in a manner that blocks device vents.
- Do not use the device in environments, such as laboratories, where chemical reactions occur or environments exposed to air that contains salt or toxic gases.
- Use the device in environments at specified power supply voltage and frequency (100 to 240 V and 50/60 Hz).
- Do not connect or disconnect the power cord or an interface cable by holding the cable itself. Do not pull or carry the device while cables are under load.
- Do not drop or insert small objects such as clips or push-pins into the device.
- Do not connect too many power cords to a single electrical outlet.
- Do not spill tea, coffee, juice, or other beverages onto the device. Do not subject the device to insecticides. If liquid is spilled onto the device, turn off the power, disconnect the power plug from the electrical outlet, and contact your retailer.
- Do not disassemble or modify the device.
- Do not use non-specified AC adapters.
- Use only the included power cord. Do not use the included power cord with other devices.
- Do not use deformed or damaged power cords.
- Do not unnecessary process power cords.

■ **Exposed wire due to damaged power cords or melted sheaths may cause current leakage, malfunction, or electric shock. Contact your retailer if the power cord becomes damaged.**

- Do not place objects around the power plug.

PRECAUTIONS IN HANDLING THE PRINTER

⚠ CAUTION

Caution label is attached in the position shown in the following figure. Carefully read the handling precautions before using the printer.

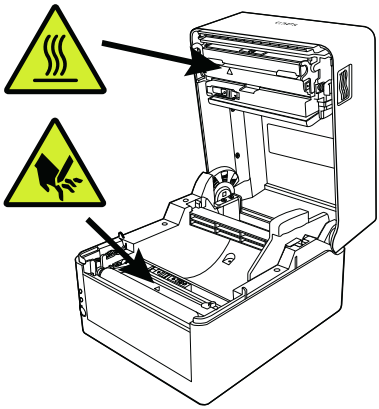

These labels indicate that the head becomes hot, so touching it may cause burns, and touching the auto cutter and manual cutter when opening the paper cover may cause cuts on hands.

⚠ CAUTION

- **Do not touch the area around the thermal head during or right after the printing process. This area will be hot and may cause burns.**
- **Do not drop or insert small objects such as clips or pins into the printer. Doing so may result in failure.**
- **Exercise caution when carrying or transporting the device. Dropping the device may damage other objects or cause injury.**
- **Make sure to open the printer cover fully when it needs to be opened. Failure to do so may result in the printer closing unexpectedly, which may cause injury.**
- **Exercise caution when the printer cover is open. Contact with edges may result in injury.**
- **Do not open the printer cover while the printer is printing.**
- **Do not use thinner, trichlene, benzene, ketone-based solvents, or cleaning cloths with chemicals to clean the case surface.**
- **Do not use the device in environments exposed to significant levels of oil, metal shavings, waste, and dust.**
- **Do not spill liquids onto the device or expose the device to spray chemicals.**
- **Do not step on, drop, hit, or otherwise subject the device to significant force or impact.**
- **Make sure to use the control panel correctly. Pressing buttons randomly may cause malfunction and even failure. Do not use sharp objects including tips of pens to operate the control panel.**
- **If some abnormality occurs during use, immediately stop using the device and disconnect the power plug from the electrical outlet.**
- **Do not disassemble the device for repairs in case of failure. Always contact the dealer for repairs.**
- **The auto cutter has internal blades near the media discharge port. Never insert hands inside the media discharge port whether the printer is operating or not.**
- **There is a risk of the thermal head being damaged by static electricity. Take measures to prevent the charging of static electricity in advance, and do not directly touch the thermal head heating element and connector terminal parts when handling the printer.**
- **Clean the platen regularly because printing or cutting at the correct position may become impossible if it is dirty.**

PRECAUTIONS ON PRINTER INSTALLATION

⚠ CAUTION

- **Do not use or store the device in environments exposed to excessive heat, moisture, direct sunlight, near heaters, extremely high or low altitudes, excessive humidity, or excessive dust.**
- **Do not use the device in environments, such as laboratories, where chemical reactions occur.**
- **Do not use the device in environments exposed to air that contains salt or toxic gases.**
- **Place printers on level, stable surfaces in environments with good ventilation. (Do not place the printer such that the vents are against walls.)**
- **Do not place objects on top of the device.**
- **Using the device near radios or televisions or plugging the power cord into the same electrical outlet as used by such devices may cause reception interference.**
- **Use the device in environments at specified power supply voltage and frequency.**
- **Use only the included power cord. Do not use the included power cord with other devices.**
- **Do not place objects or step on power cords.**
- **Do not pull or attempt to carry the device by the power cord or an interface cable.**
- **Do not connect too many power cords to a single electrical outlet.**
- **Do not bundle the power cord.**
- **Hold the power cord by the power plug to connect and disconnect to/from electrical outlets.**
- **Ensure connectors are properly connected. In particular, reversing the polarity may damage internal parts.**
- **Turn the power switch off before connecting or disconnecting interface cables.**
- **Do not run long signal lines or make connections with noisy devices to the extent possible. If necessary, use shielded twisted pair cables for signal lines and take any other necessary steps to ensure signal integrity.**
- **Place the device near an electrical outlet and ensure that the power plug can be unplugged easily so that the power to the device can be cut quickly if necessary.**
- **Use electrical outlets with ground terminal screws. Using electrical outlets without ground terminals may result in injury due to static electricity.**
- **Do not install the printer in a location where there is vibration or in an unstable location.**

THE TABLE OF CONTENTS

1. GENERAL OUTLINE 15

1.1 Features 15
1.2 Unpacking 17
1.3 Model Classification 18

2. Part Names and Function 20

2.1 Front of Printer 20
2.2 Operation panel 23
2.3 FEED Key Operation Depending on Printer Status 24
2.4 Rear of Printer 25
2.5 Inside of Printer 27

3. SETUP 31

3.1 Printing Preparation Process 31
3.2 Loading Paper 32
3.3 Adjusting Media Sensor Positions 56
3.4 Connecting the AC Adapter 59
3.5 Connecting the Printer to a Host Computer 62
3.6 Connecting with a Peripheral Device 64
3.7 USB Power Supply Port 65
3.8 Install the Printer Driver 65

4. Configuring Printer Settings Using the Specialized Utility 66

4.1 List of Settings 66
4.2 Obtaining the LabelPrinterUtility 74
4.3 Using the LabelPrinterUtility 74

5. Configuring the Wired LAN Network Settings Using the Utility Software 75

5.1 Network Seeker 75
5.2 NetToolK 77

6. Configuring Printer Settings Using LinkServer 85

6.1 LinkServer user roles 85
6.2 LinkServer menu configuration 86
6.3 LinkServer connection procedure 87

7. Configuring the Printer Using the Operation Panel 93

7.1 Sensor Adjustment Mode 95
7.2 Test print mode 99
7.3 Configuration Print Mode 101
7.4 Emulation switching mode 103
7.5 HEX Dump Mode 104
7.6 Initialization Mode 105

8. Online Configuration Mode 107

9. Clearing Jobs Stored in the Printer 108

10. Cutter lock release mode 109

11. Maintenance 110

11.1 Plastic Surface of Printer and Platen 111
11.2 Thermal head 111
11.3 Peeler 111

12. Appendices 112

12.1 Error/Alarm Indications 112
12.2 Emulation Auto Detect setting 113
12.3 Troubleshooting 115
12.4 Basic Specifications 118
12.5 Usage Conditions 130
12.6 Storage Conditions 130
12.7 Interfaces 130

1. GENERAL OUTLINE

Thank you for purchasing the Citizen Systems Line Thermal Printer CL-E300 / CL-E303 / CL-E300EX / CL-E303EX / CL-H300SV.

This printer is a line direct thermal printer developed for labels, tags, tickets, and many other applications.

1.1 Features

< Compact and Stylish Design >

- Boasting the smallest footprint in the industry, this printer was designed to be compact to free users from placement restrictions.
- The stylish design enables the device to be used in different environments.
- Exterior color options include black and pure white.

< High-speed, High-quality Printing >

- This printer utilizes the direct thermal method and a thermal print head and includes a 32-bit RISC CPU with a maximum operating frequency of 216 MHz and thermal history control to provide high-speed, high-quality performance up to 8 IPS with the CL-E300/CL-E300EX/CL-H300SV model and up to 6 IPS with the CL-E303/CL-E303EX model.

< Adjustable Sensors Provided as Standard >

- Adjustable media/black line sensors are provided as standard so that the detection position can be adjustable horizontally. This enables sensors to be placed at detection positions suitable for different types of media.

< Interface >

- Standard interfaces include a 9-pin, DSUB RS-232C interface, full-speed USB 2.0 port, and an Ethernet port that supports 10BASE-T and 100BASE-TX . These interfaces enable high-speed connections to many peripheral devices (CL-E300/CL-E303).
- Support is available for RS-232C, Bluetooth, wired LAN, wireless LAN (2G/5G), and wired/wireless LAN interface with USB host thanks to an interchangeable interface board (CL-E300EX/CL-E303EX/CL-H300SV).
- XML print functions are provided for the wired/wireless LAN interface (CL-E300EX/CL-E303EX/CL-H300SV).

< Excellent Usability >

- Manual media cutters are installed at the top and bottom of the media discharge port to cut media after being printed for better usability in many different environments.
- The operation panel has been designed to have a different color than the main exterior color for better visibility and stress-free operation.
- Thermal heads and platen rollers can be easily replaced without the use of tools.

< Easy to Use >

- Use the LabelPrinterUtility developed by Citizen to configure printer settings from a host computer.
- The built-in LinkServer™ printer tool can be used over wired LAN or USB connections (Android device) to change settings and perform other operations (CL-E300/CL-E303).
- Printer includes functionality to enable users to quickly adjust head balance.

< Models with cutter, models with peeler and models with AC adapter storage case are available >

- Models equipped with an auto cutter and models equipped with a peeler are also available.
- The auto cutter models that are available include the integrated fixed blade/adjustable blade model*1 and the interchangeable fixed blade/adjustable blade model*2.
- Models that allow you to store the AC adapter at the bottom of the printer are also available.

*1 Standard cutter capable of cutting paper up to 0.19 mm thick.

*2 Economy cutter capable of cutting paper up to 0.15 mm thick.

< Silver ion coating model available >

- Models compatible with silver ion coating are also available.

1.2 Unpacking

Make sure the following items are included with your printer.

NAME	Exterior appearance
Printer	**Standard model and optional interface model** **Model with AC adapter storage case** **Integrated cutter model** 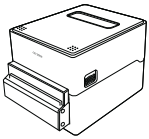 **Separable cutter model** **Peeler model**
AC adapter	*** All models except models with an AC adapter storage case** 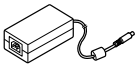

NAME	Exterior appearance
AC cord	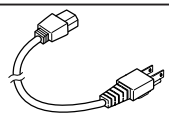
Media shaft	
Media shaft guide	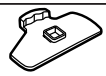
USB cable	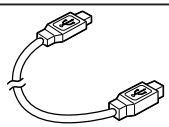
Quick Start Guide* Safety Instructions	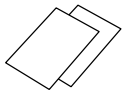

* You can download the driver, SDK, utility and BarTender (label creation software) from the URL listed in the Quick Start Guide.

1.3 Model Classification

Model numbers indicate printer features according to the following system.

CL - E300 X E B N N A

1 2 3 4 5 6 7

1: Model name

CL-E300: 203 DPI

CL-E303: 300 DPI

CL-E300EX: 203 DPI

CL-E303EX: 300 DPI

CL-H300SV: 203DPI (Silver ion containing)

2: Fixed value

3: Market

A: Asia

C: China

E: Europe

U: North America

4: Body case color

B: Black

W: Pure white

5: Interface

CL-E300/CL-E303

N: USB port, wired LAN, and serial port

CL-E300EX/CL-E303EX/CL-H300SV

RS: Serial RS-232C

BT: Bluetooth

ET: Wired LAN

HET: Wired LAN+USB host

WX2/WX5: Wireless LAN (2.4G/5G)

HWX5: Wireless LAN+USB host

NN:USB

6: Cutter/Peeler

N: None

BC: Integrated cutter

PC: Separable cutter

PE: Peeler

7: AC adapter storage case

A: Not available

S: Available

Certain combinations may not be available. Please contact us for inquiries on desired configurations.

2. Part Names and Function

2.1 Front of Printer

Standard model and optional interface model

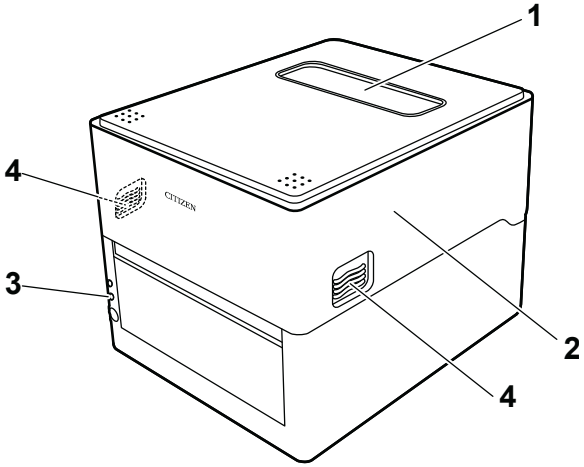

Model with AC adapter storage case (The figure illustrates the standard model with AC adapter case)

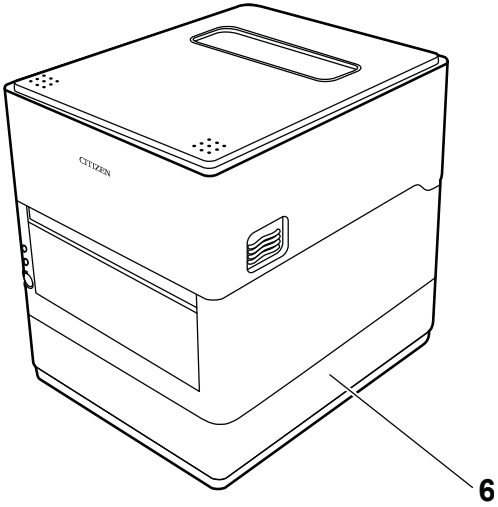

Integrated cutter model

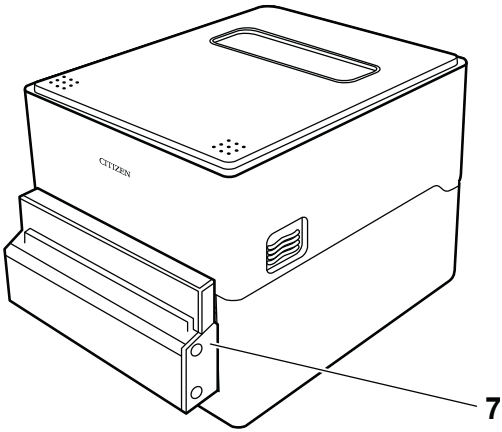

Separable cutter model

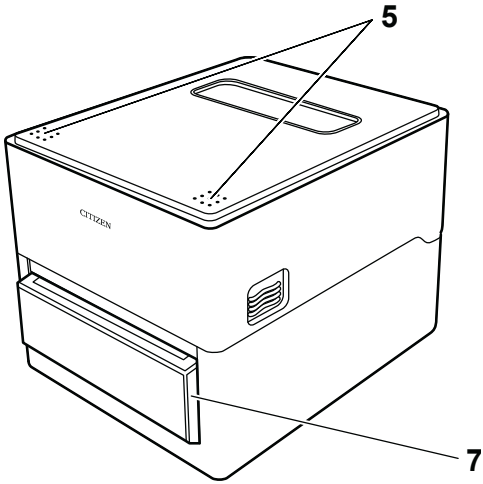

Peeler model

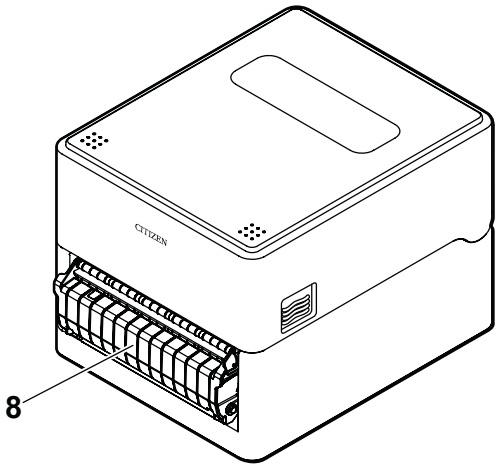

1: Media window

Enables users to check the media level.

2: Top cover

Opens upward so users can replace or set media.

3: Operation panel

Includes 2 LEDs and 1 key.

Enables users to perform different printer operations and check printer status.

Refer to 2.2 Operation panel

4: Cover release buttons

The cover is opened by pressing the buttons on both the right and left sides.

5: Push marks

6: AC adapter case

7: Auto cutter

8: Peeler

2.2 Operation panel

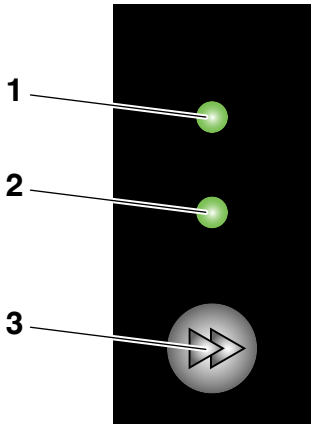

The operation panel includes 2 LEDs and 1 key.

1: Power LED

Turns on when the power is turned on and turns off when the power is turned off.

2: Status LED

Turns on or flashes in green, red, and amber depending on the printer status.

Color	Lights/ flash- es	Status
Green	On	Printer is online
	Flash- es	Receiving data
Amber	On	Startup
Red, green, amber	Flash- es	Error or alarm
-	Off	Paused

3: FEED key

2.3 FEED Key Operation Depending on Printer Status

Startup

Turning on the power to the printer while pressing and holding the FEED key with the cover closed changes starts the printer in the special function mode.

Refer to 7. Configuring the Printer Using the Operation Panel

Online state (status LED is solid green)

(1) Press the FEED key while the printer is not receiving data to feed media.

- If label media is specified, the printer automatically stops after detecting the beginning of media. If continuous media is specified, the printer stops after a certain amount of feed operation.
- If Tear off mode is selected in the Function Select setting, the printer feeds media to the tear-off position.
- For models with a cutter, the printer will feed media to the cut position and then cut the media.

(2) Press and hold the FEED key for at least 3 seconds while the printer is not receiving data to change the operation mode to the online configuration mode.

Refer to 8. Online Configuration Mode

(3) While the printer is not receiving data, and you continue to press and hold the FEED key until you perform the cut operation, the cut operation will be performd once. This function is effective only for integrated cutters.

Refer to 10. Cutter lock release mode

Printing (status LED is solid or flashing in green)

Press the FEED key while the printer is printing or receiving data to pause the printer.

- The status LED turns off, and the printer pauses.
- If the FEED key is pressed while the printer is printing, the printer will finish printing the current label and then stop.

  Press the FEED key again to resume printing operation for the remaining labels in the print job.

Paused (status LED is off)

Press and hold the FEED key to change to the clear job mode.

Refer to 9. Clearing Jobs Stored in the Printer

Error/alarm has occurred (status LED flashes in red, green, or amber)

Press the FEED key to clear the error or alarm.

2.4 Rear of Printer

Standard model

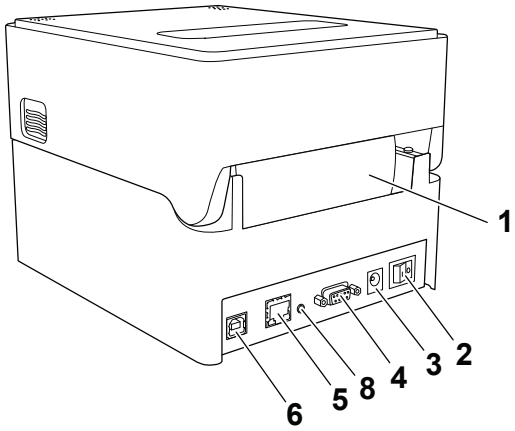

Model with AC adapter storage case

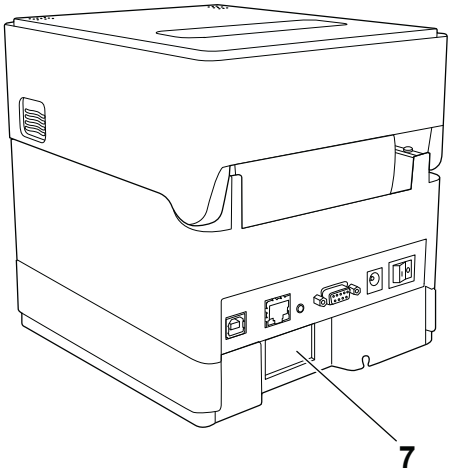

Optional interface model

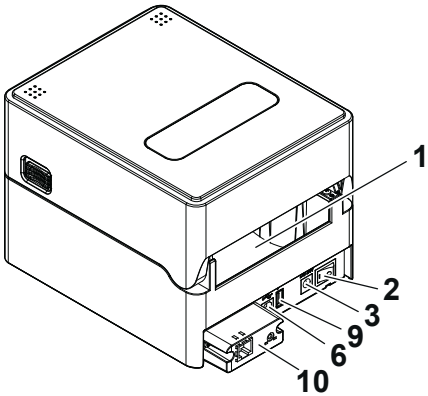

1: External media feed port

This port is used to feed media into the printer.

2: Power switch

Turns the printer power supply on and off.

3: DC jack

Connects to the included AC adapter.

4: Serial interface (9-pin D-SUB male)

5: Ethernet Interface

6: USB interface

7: AC port

8: Panel button

This button prints and initializes network settings.

9: USB power supply connector

Supplies power to USB devices.

10: Interface connector (Wired LAN, etc.)

Connect to the interface cable.

CAUTION

Do not connect a USB cable to the Ethernet interface. Doing so may damage connectors/interfaces.

2.5 Inside of Printer

Standard model and optional interface model

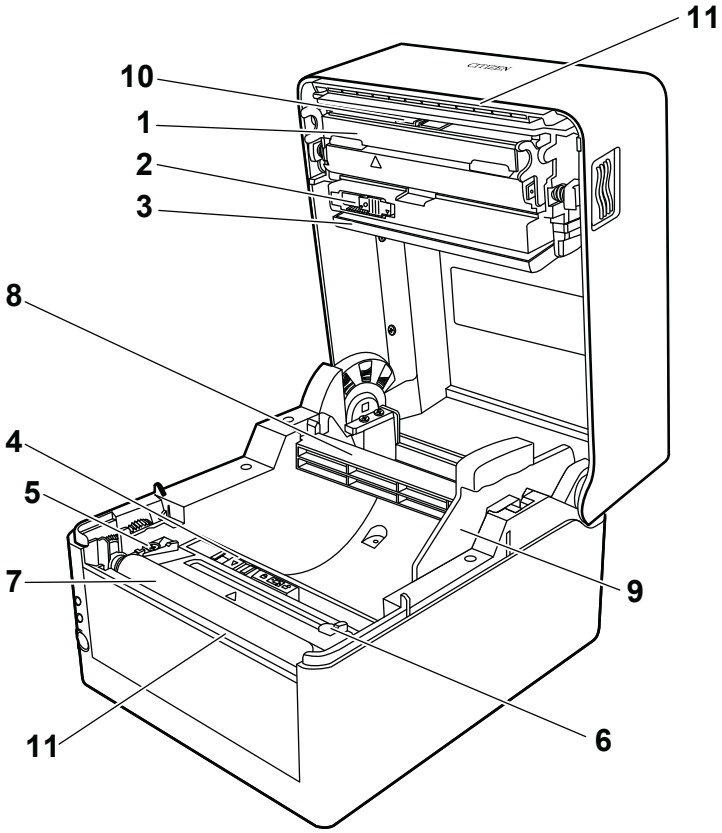

Integrated cutter model

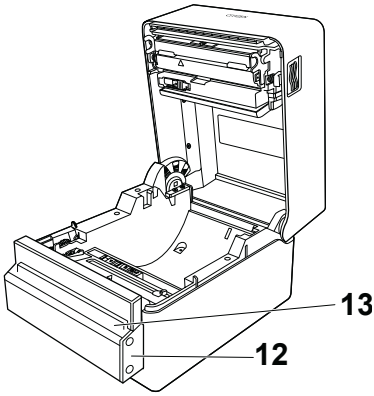

Separable cutter model

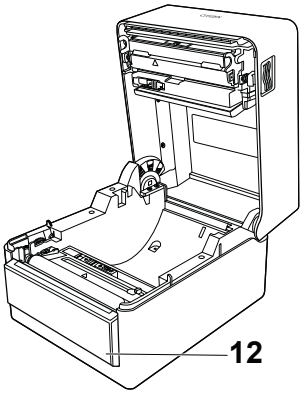

Peeler model

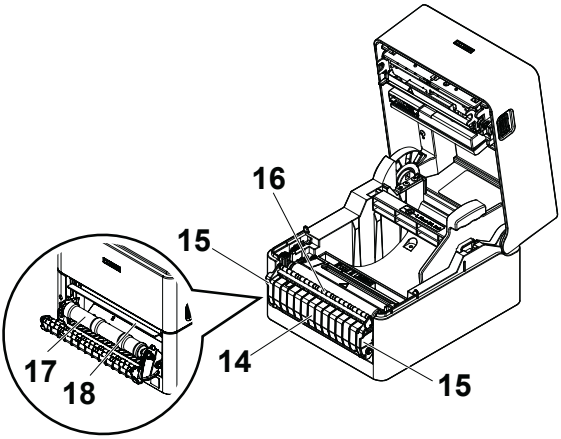

1: Thermal head

Prints characters and graphic data on paper (paper rolls).

2: Upper sensor

This sensor detects the media position.

3: Media damper

When using roll media, absorbs tension generated by media feed operations to prevent print errors.

4: Bottom sensor

This sensor detects the media position.

Devices are equipped with lock mechanisms.

5: Fixed left-side media guide

6: Adjustable right-side media guide

7: Platen roller

This roller transports media.

8: Media shaft

9: Media shaft guide

10: Head balance adjustment slider

11: Manual cutter (Upper/Bottom)

12: Auto cutter

13: Media discharge port

14: Peeler cover

15: Opening handle

16: Media hold-down bar

17: Peeler roller

18: Peeling plate

3. SETUP

3.1 Printing Preparation Process

The printer must be set up according to the following process before printing can be performed.

Refer to the description of each section for detailed information on each step of the process.

1. Unpack and check the package contents

Refer to 1.2 Unpacking

2. Physical installation

3. Loading Media

Refer to 3.2 Loading Paper

4. Adjusting Media Sensor Positions

Refer to 3.3 Adjusting Media Sensor Positions

5. Connecting the AC Adapter

Refer to 3.4 Connecting the AC Adapter

6. Connecting the Printer to a Host Computer

Refer to 3.5 Connecting the Printer to a Host Computer

7. Operation Check

Refer to 7.2 Test print mode

8. Installing the Printer Driver onto the Host Computer

Refer to 3.8 Install the Printer Driver

9. Installing the Configuration Application onto the Host Computer

Refer to 4.2 Obtaining the LabelPrinterUtility

10. Printing

Perform a test print from the printer driver installed on the host computer.

3.2 Loading Paper

Loading roll media (Standard model and cutter model)

1. Press the cover release buttons on both the right and left sides to open the top cover.

CAUTION

Note the following precautions when the top cover is open.

- Do not touch the thermal head.
- Do not touch the cutter blades.

2. Insert the media shaft through the core of the media roll and then install the media shaft guide.

- The media shaft is designed to accommodate both 1-inch and 1.5-inch media roll cores by flipping it upside down. The media shaft has markings indicating which side supports the different core sizes. Select the media shaft orientation in accordance with the size of the media roll core.

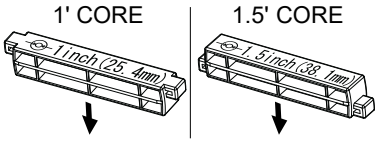

Notes

- Use media rolls that have the print surface on the outer side. Do not use media rolls that have the print surface on the inner side. Labels may peel when such media roll is backfed.
- If the media shaft is not installed correctly, the top cover or bottom of the printer will prevent media from feeding properly and cause paper jams.

3. Set the media so that the media shaft guide is on the right side of the media when looking at the front of the printer.

4. Press the media shaft guide onto the media roll so that the center of the media aligns with the center of the media shaft and then set the media into the printer.

1. Assemble the media shaft and media shaft guide.
2. Insert the media shaft through the core of the media roll and then set the assembly into the printer.
3. Set the media in the printer and slide the media to the left from the perspective of looking at the front of the printer. Insert the media shaft guide into the paper at this position.

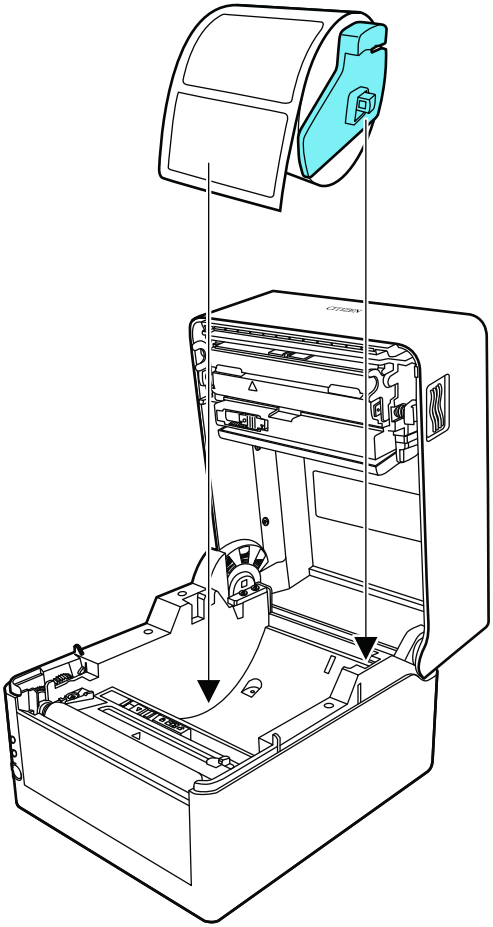

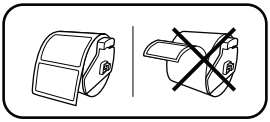

Notes
Too much abutment force by media shaft guide may cause improper feeding of media, which may negatively impact print quality.

5. If using an integrated cutter model, insert the media through the cutter slit.

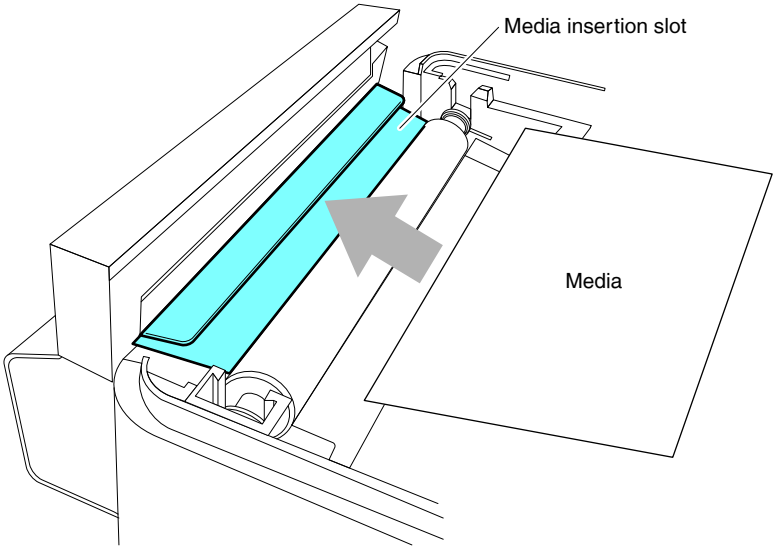

Notes
Insert media into the slit correctly. Failure to do so may result in improper feeding of media, which may cause paper jams.

6. **Make sure the media is in abutment with the left media guide and then adjust the position of the right media guide in accordance with the media width.**

   From the front of the printer, set in front of the edge of media by approximately 10 mm.

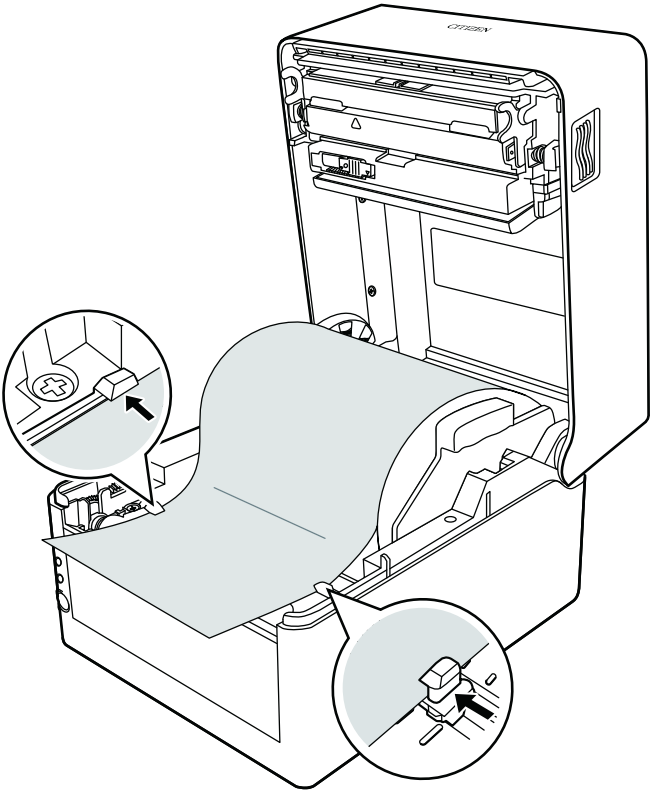

Notes
Too much abutment force of the right movable paper guide may cause improper feeding of media, which may negatively impact print quality.

7. **Slide the head balance adjustment slider located near the thermal head along the media size scale (inch) so that the position of the notch in the slider matches the media width.**

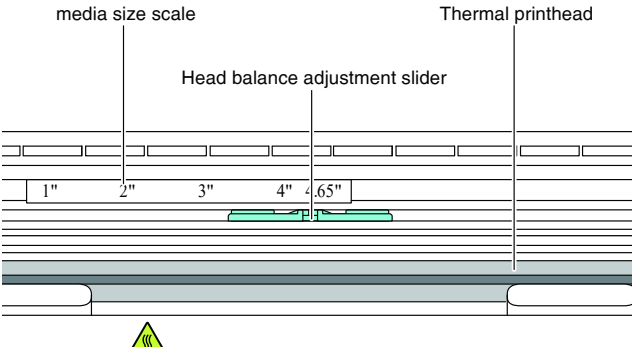

CAUTION

Adjust the head pressure horizontal balance carefully so as not to damage the thermal head.

Damaged thermal heads will result in poor printing, paper jams, and malfunction.

8. **Close the top cover.**

Press the push marks on left and right sides at the top of the top cover and ensure that the top cover hooks on each side lock securely.

CAUTION

If the top cover is not securely locked, this may cause print errors, paper jams, and malfunction.

Loading Paper (Peeler model)

1. Check whether the print mode is set to peeling mode.

Check whether the value of “Function Select” in the “After Print Setup” menu is set to “Peel”.

Refer to 4.1 List of Settings

CAUTION
The peeler model can only be used in the peeling mode.

2. Perform the operations of procedure 1 to procedure 4 in section “3.2 Loading Paper”.

Refer to 3.2 Loading Paper

3. Peel the label from the backing paper.

Make sure that the area with the backing paper only is at least 20 cm from the end of the backing paper (illustration A).

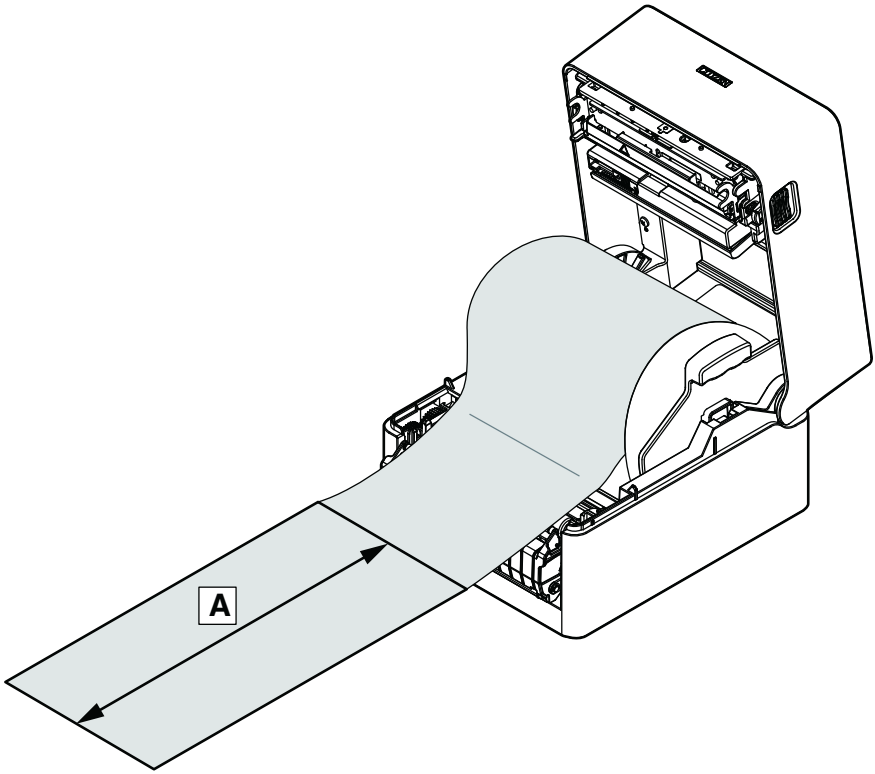

4. Grip the opening handles with both hands, and gently pull forward.

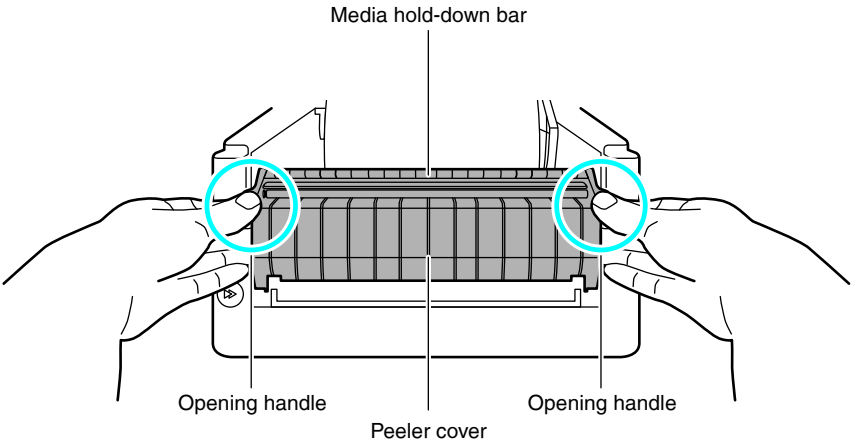

CAUTION

- If the media hold-down bar is held down with a finger and the peeler cover is opened, there is a possibility of damage to the media hold-down bar.
- Do not apply a strong downward force to the peeler cover while it is open. Doing so may damage the peeler.

5. **When the peeler cover is open, pass the backing paper between the peeling plate and the peeler roller.**

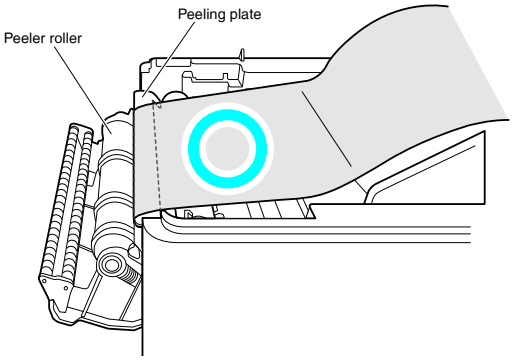

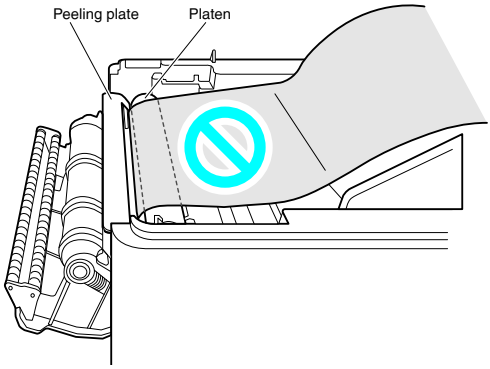

6. **Pull down the backing paper further, so that it extends at least 7 cm from the peeler cover (illustration A).**

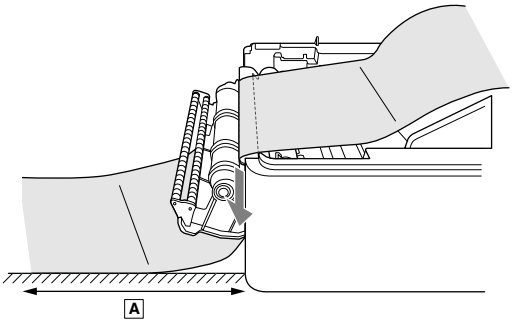

7. Make sure the media is in abutment with the left media guide and then adjust the position of the right media guide in accordance with the media width.

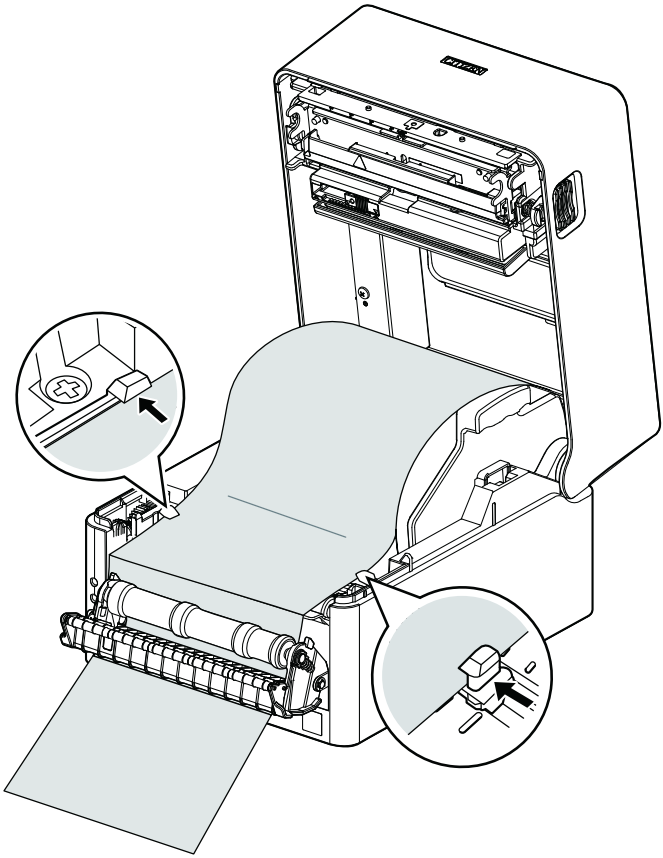

At this time, check that the label is not over the bottom sensor or fed past the bottom sensor (check that only the backing paper passes the bottom sensor).

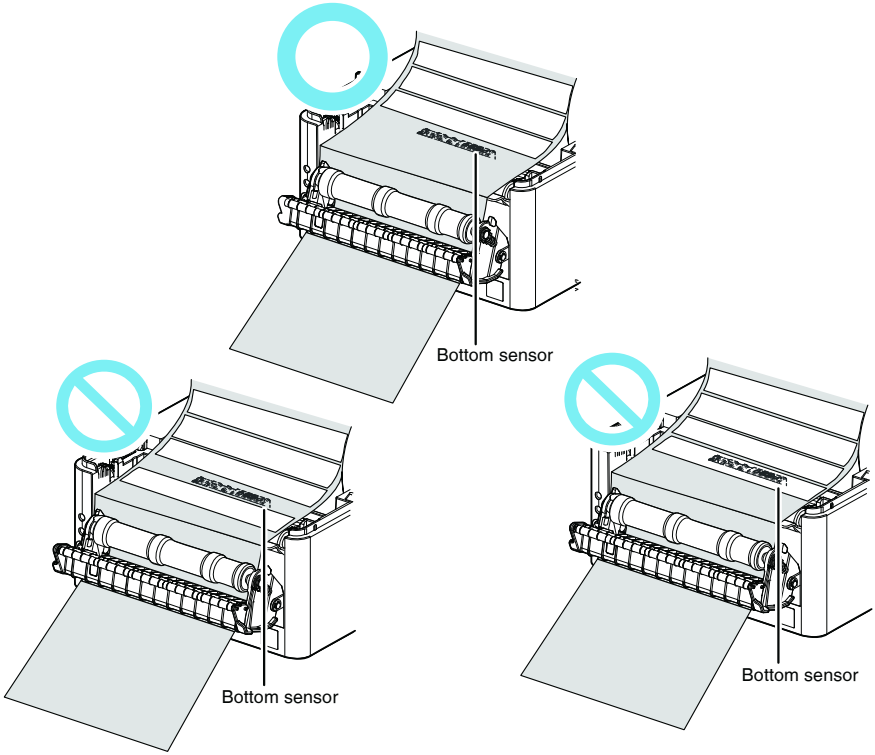

Notes

- Do not push the media guide against the media with too much force. This may negatively impact print quality.
- If the label is over the bottom sensor, it may not peel off correctly during the first paper feed.

8. **Slide the head balance adjustment slider located near the thermal head along the media size scale (inch) so that the position of the notch in the slider matches the media width.**

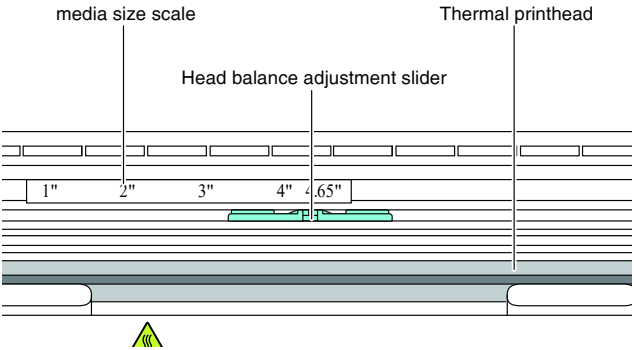

CAUTION

Adjust the head pressure horizontal balance carefully so as not to damage the thermal head.

Damaged thermal heads will result in poor printing, paper jams, and malfunction.

9. Close the top cover.

Press the push marks on left and right sides at the top of the top cover and ensure that the top cover hooks on each side lock securely.

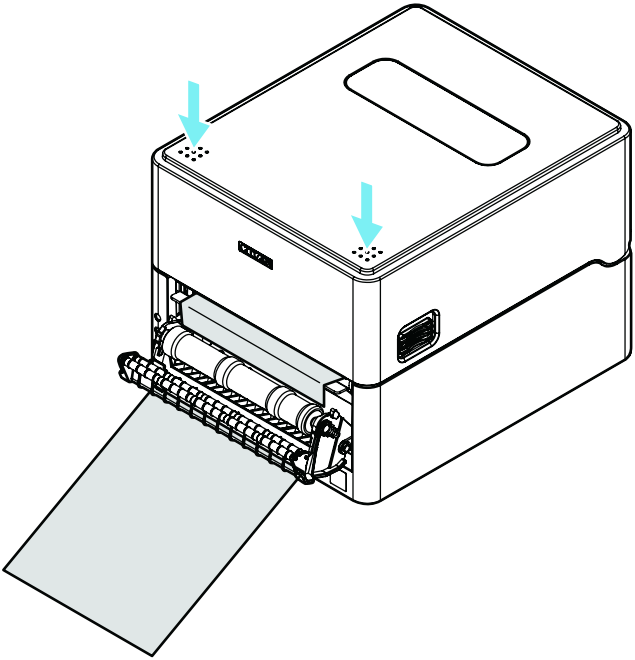

CAUTION
If the top cover is not securely locked, this may cause print errors, paper jams, and malfunction.

10. **Pull the backing paper extending from the peeler cover downwards, and eliminate the slack.**

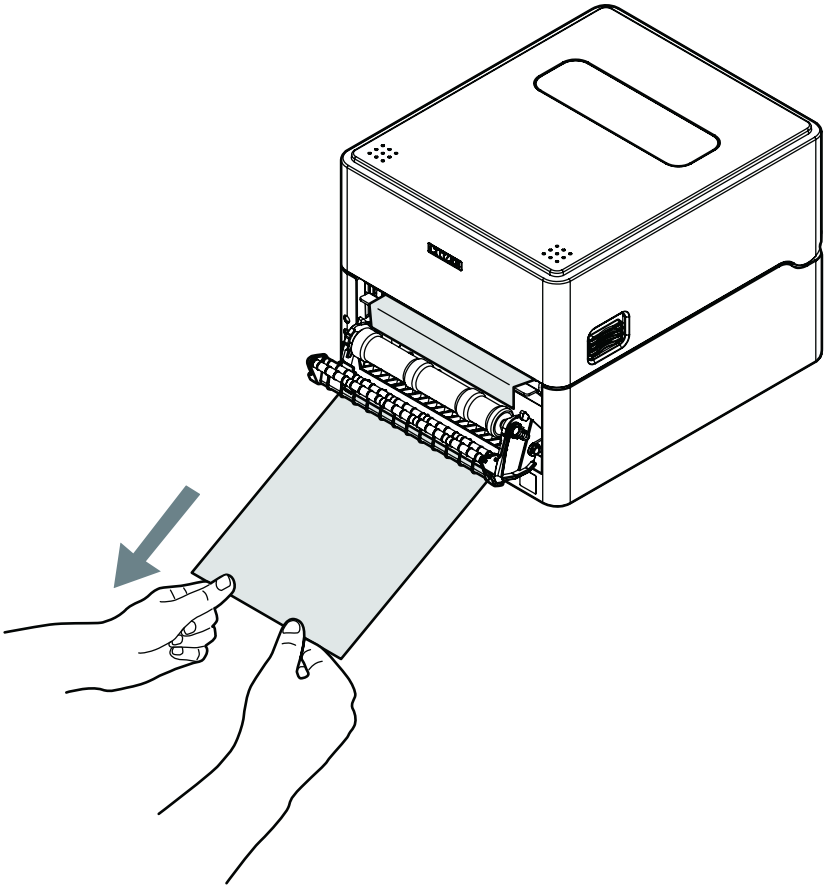

11. Close the peeler cover.

Turn on the power to the printer, and press the FEED key on the operation panel.

Feed the media and check that it stops at the position where one label has been peeled.

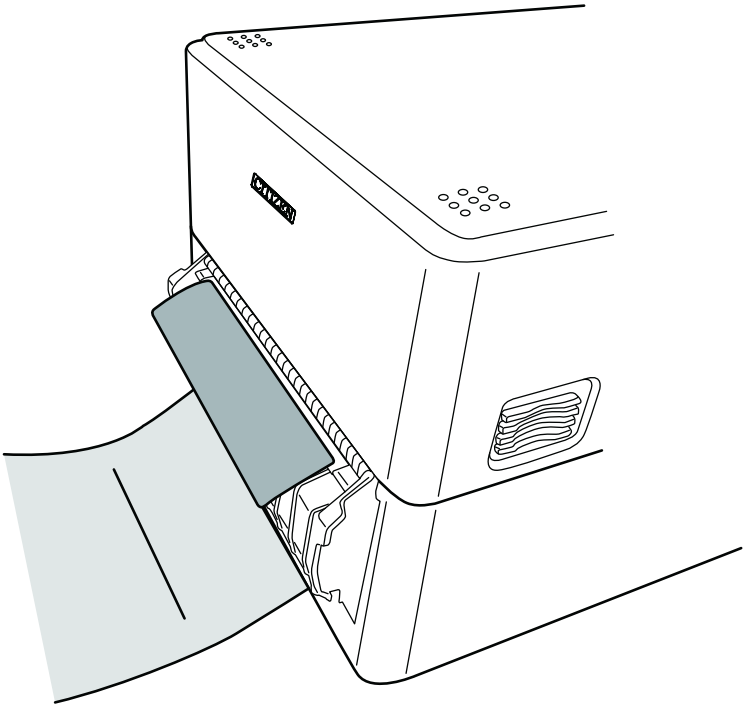

Notes
If the peeled label has not stopped at an appropriate position, due to differences in media types, media width, etc., adjust the MACHINE PEEL POSITION using the label printer utility extension function.

Refer to 4.2 Obtaining the LabelPrinterUtility

CAUTION

- Do not apply a strong downward force to the peeler cover while it is open. Doing so may damage the peeler.
- Ensure that the backing paper does not block the backing paper outlet after it is peeled off, and that it hangs perpendicular to the printer installation surface.

  Also, when a large quantity of the backing paper after peeling has accumulated, the backing paper does not hang vertically, and the backing paper may become entangled in feet causing the printer to fall or an injury.

  It is recommended that the backing paper be disposed of before it has accumulated in a large quantity.
- If the peeler cover is left closed for a long period of time, the components around the platen may become deformed.

  During transport, keep the peeler cover open.

Notes

- Factors such as label media quality, adhesive, surface treatment, and the humidity and environmental temperature where the device is being used may prevent the label from peeling off properly.
- If the peeling sensor is exposed to strong light such as direct sunlight, the peeling sensor may malfunction and the peeler may not operate correctly.
- If the media does not peel normally and becomes wound around the peeler roller or the platen, or if there is a paper jam, open the peeler cover and remove the media.

  If the media, etc., within the peeler cannot be removed, do not apply unreasonable force, but contact your retailer or representative office.
- When label media or backing paper is wound around the peeler roller, the peeler does not operate normally. Only use the peeler after eliminating the blockage.
- If the peeled label media is removed by peeling in the parallel or downward direction, deviation of the media may occur.

  Be sure to peel away from the backing paper in the upward direction.
- External media feed cannot be used. Set label media with a roll outer diameter of ϕ127 or less in the printer for use.
- If the media width changes after long-term use, there is a possibility that printing or feeding will be affected, depending on the state of wear of the platen and the peeler roller.

  If it is not possible to clean the platen and peeler roller or to improve the adjustment of the head balance and the media guide, it is recommended that the thermal head or the platen be replaced.
- It is recommended that the platen be replaced after 5 to 10 km (50,000 to 100,000 labels of length 10 cm), because the printing quality is affected.
- If dust or dirt is adhering to the peeling sensor, the peeling sensor may not operate correctly, so it should be periodically cleaned.
- If label media adhesive or paper dust are deposited on the platen, the peeler roller or the media hold-down bar, deviation of the peeling position or peeling defects may occur, so it is recommended that they be cleaned when replacing the media.

Refer to 11. Maintenance

Loading fanfold media

1. Press the cover release buttons on both the right and left sides to open the top cover.

2. **Insert the fanfold media through from the external media feed port at the back of the printer.**

⚠ CAUTION
Note the following precautions when the top cover is open. • Do not touch the thermal head. • Do not touch the cutter blades.

3. **Leaving the specified gap from the printer, place the fanfold paper so that it is at the same height as the printer and becomes parallel with the printer as shown in the figures below.**

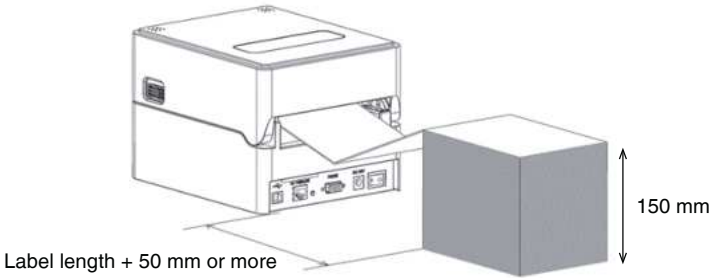

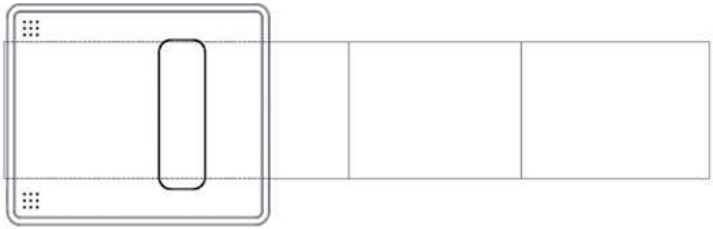

Place the fanfold media so that it is parallel with the printer.

4. Insert the fanfold media through below the media shaft and set the media shaft guide by aligning it with the media width.

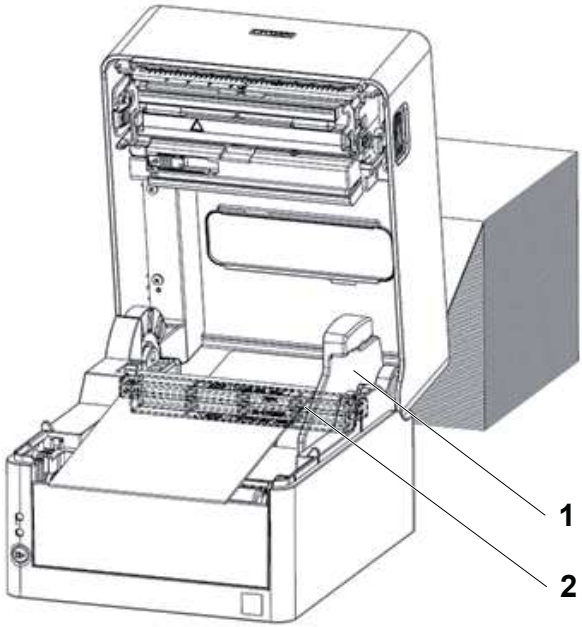

1. Media shaft guide
2. Media shaft

5. If using an integrated cutter model, insert the media through the cutter slit.

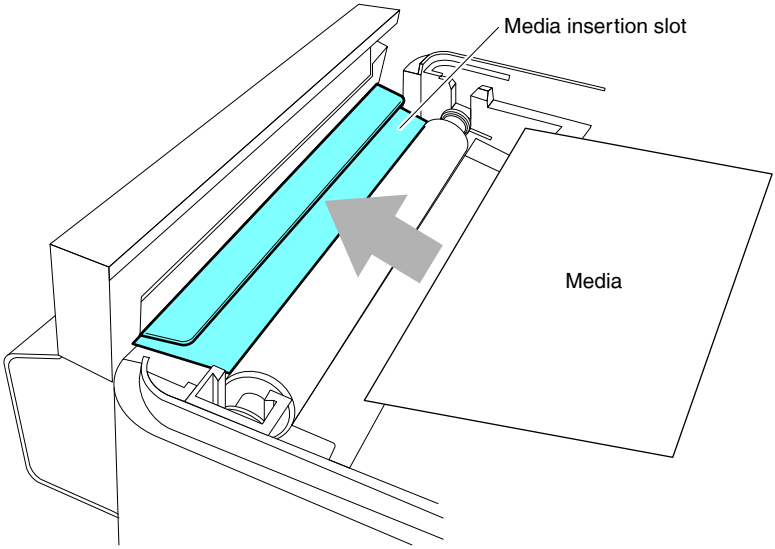

Notes
Insert media into the slit correctly. Failure to do so may result in improper feeding of media, which may cause paper jams.

6. **Make sure the media is in abutment with the left media guide and then adjust the position of the right media guide in accordance with the media width.**

   From the front of the printer, set in front of the edge of media by approximately 10 mm.

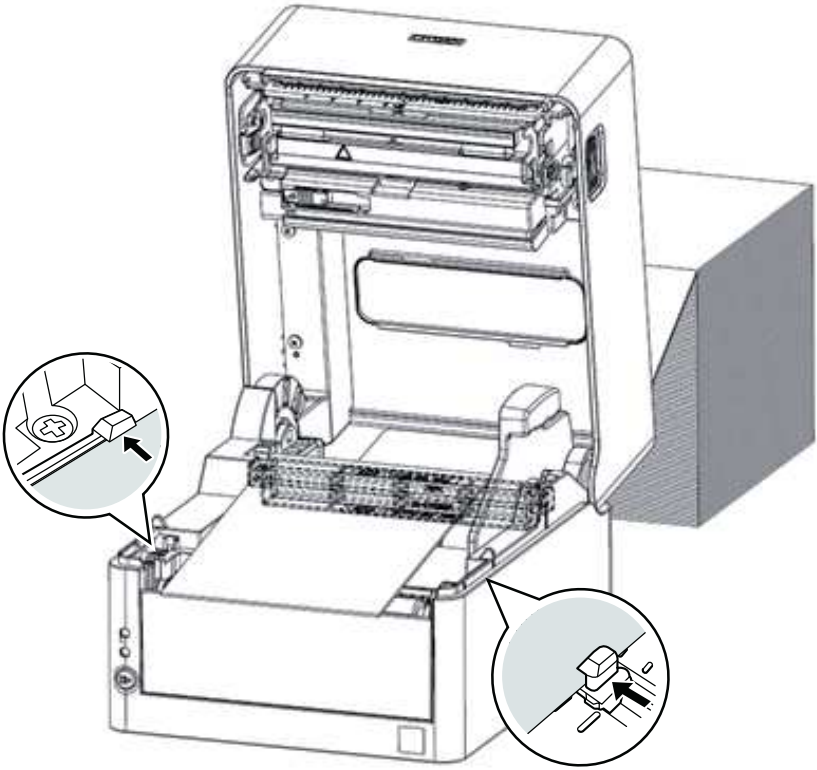

Notes
Too much abutment force of the right movable paper guide may cause improper feeding of media, which may negatively impact print quality.

7. **Slide the head balance adjustment slider located near the thermal head along the media size scale (inch) so that the position of the notch in the slider matches the media width.**

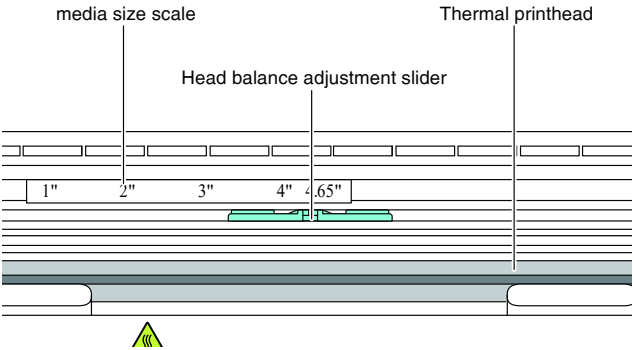

CAUTION

Adjust the head pressure horizontal balance carefully so as not to damage the thermal head.

Damaged thermal heads will result in poor printing, paper jams, and malfunction.

8. **Close the top cover.**

Press the push marks on left and right sides at the top of the top cover and ensure that the top cover hooks on each side lock securely.

CAUTION

If the top cover is not securely locked, this may cause print errors, paper jams, and malfunction.

Cut position of media with a perforated line

- For models with cutters

  When cutting media with perforated lines with the auto cutter, adjust the media stop position so that the media is cut at a position after a perforated line.

  When making the adjustment, set the vertical printing position to a value larger than the media stop position. Otherwise, the media may come off the platen during back feeding.

  Adjust each setting using the printer driver or LabelPrinterUtility.

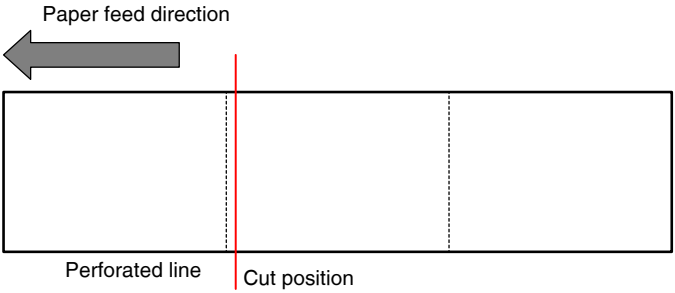

- For standard models

  When tearing manually, the media can be torn at the position of the perforated line.

  When adjusting the paper stop position, set the vertical printing position to a value larger than the media stop position. Otherwise, the media may come off the platen during back feeding.

  Adjust each setting using the printer driver or LabelPrinterUtility.

Compatible Paper Types

CAUTION

Do not directly cut the label part in cutter models. Doing so may cause the label media adhesive to accumulate on cutter blades, which could result in failure.

Refer to the following specification table for information on the types of media compatible with this printer.

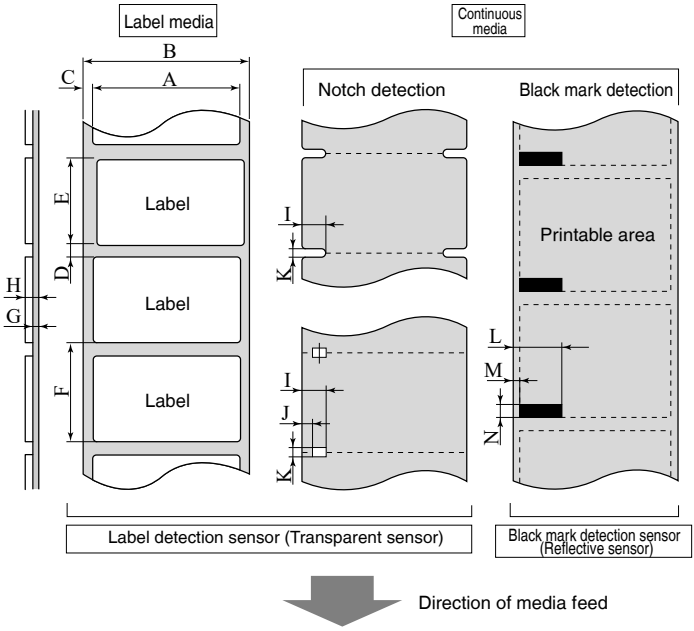

		Minimum value		Maximum value	
		mm	inch	mm	inch
A	Label width	21.50	0.83	118.00	4.65
B	Backing paper width	25.40	1.00	118.00	4.65
C	Left edge position of label	0	0	2.54	0.10
D	Label gap length	2.54	0.10	2,539.75 (CL-E300/CL-E300EX/CL-H300SV) 1,270.00 (CL-E303/CL-E303EX)	99.99 (CL-E300/CL-E300EX/CL-H300SV) 50.00 (CL-E303/CL-E303EX)
E	Label length	6.35 25.40 (Peeler model)	0.25 1.00 (Peeler model)	2,539.75 (CL-E300/CL-E300EX/CL-H300SV) 1,270.00 (CL-E303/CL-E303EX) 120.00 (Peeler model)	99.99 (CL-E300/CL-E300EX/CL-H300SV) 50.00 (CL-E303/CL-E303EX) 4.72 (Peeler model)
F	Label pitch	8.89 27.94 (Peeler model)	0.35 1.10 (Peeler model)	2,539.75 (CL-E300/CL-E300EX/CL-H300SV) 1,270.00 (CL-E303/CL-E303EX) 122.54 (Peeler model)	99.99 (CL-E300/CL-E300EX/CL-H300SV) 50.00 (CL-E303/CL-E303EX) 4.82 (Peeler model)
G	Backing paper thickness	0.06	0.0025	0.125	0.0049

		Minimum value		Maximum value	
		mm	inch	mm	inch
H	Total media thickness (standard / integrated cutter)	0.06	0.0025	0.19	0.0075
	Total media thickness (separable cutter)	0.06	0.0025	0.15	0.0059
	Total media thickness (Peeler model)	0.06	0.0025	0.17	0.0067
I	Notch right edge position	8.3	0.32	60.80	2.39
J	Notch left edge position	0	0	57.20	2.25
K	Notch length	2.54	0.10	17.80	0.70
L	Black line right edge position	15.00	0.59	66.50	2.62
M	Black line left edge position	0	0	51.50	2.02
N	Black line length	3.18	0.125	17.80	0.70

- Use a label detection sensor (Transparent sensor) for label media gaps and media with black marks.
- Use the continuous media detection sensor (Reflective sensor) for continuous media with no notches or black marks.
- Use a label detection sensor (Transparent sensor) for fan fold media.
- Cutting at perforated lines is not recommended because an extremely large amount of paper dust and paper scraps will be generated.

  Furthermore, cleaning the platen at the start of use is recommended.
- If the label pitch is 1 inch or less, configure an accurate label pitch with the [Small Media Adjustment] setting.
- Use carbon-based ink with an OD value of at least 1.5 to print black lines.
- The stop position and cut position may change depending on the width or type of media that is used.

  Adjust these positions using the Paper Position setting.
- Media with perforated lines (including fanfold paper) cannot be used in the peeler model.

3.3 Adjusting Media Sensor Positions

Three types of media sensors can be used: the label detection sensor (transparent sensor), the black mark detection sensor (reflective sensor), and the continuous media detection sensor (reflective sensor).

The printer comes from the factory equipped with the label detection sensor (transparent sensor). Depending on the media used, it may be necessary to switch to using the black mark detection sensor (reflective sensor) or the continuous media detection sensor (reflective sensor).

Refer to 7.1 Sensor Adjustment Mode

Range of Paper Sensor Adjustment

The following figure illustrates the range of media sensor adjustment.

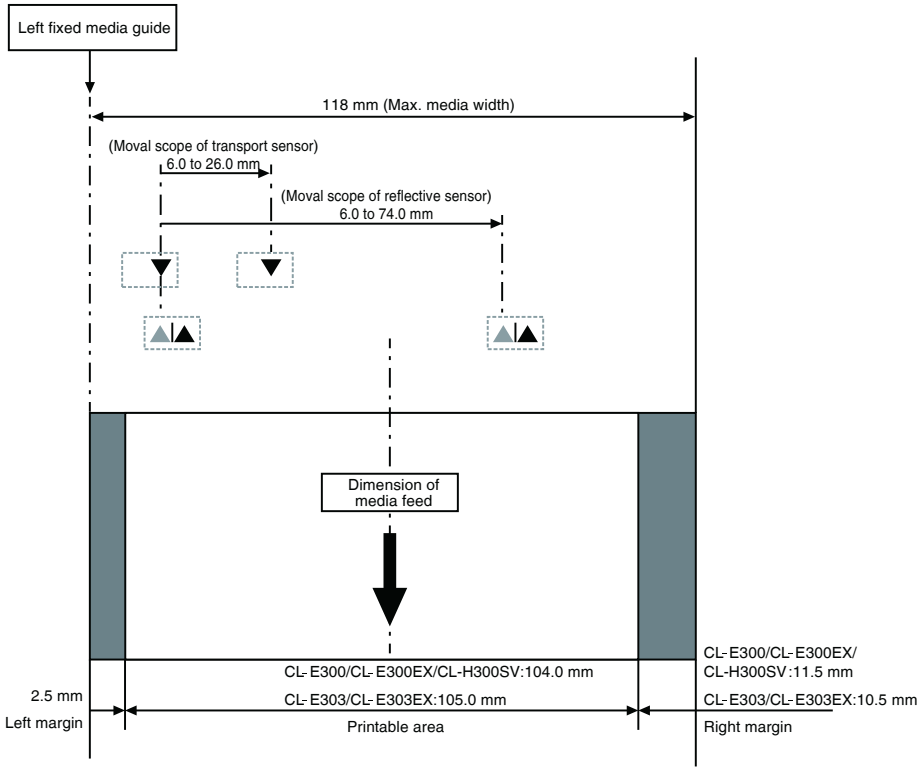

When using a label detection sensor (transparent sensor)

- **Adjust the position of the bottom sensor and upper sensor in accordance with the media width.**

  Be careful that media with black marks does not pass the media sensor.

  Move the bottom sensor and upper sensor by the same number of steps from the position of the triangle (▲).

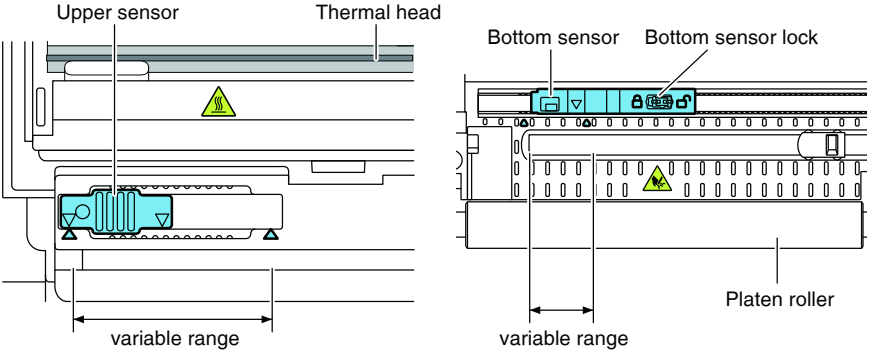

The range of bottom sensor and upper sensor horizontal adjustment is 10 steps between the triangle marks (▲).

Use a pen or other object with a narrow tip to unlock the bottom sensor and then reposition it.

Lock the sensor in place once the new position has been determined.

CAUTION
Attempting to move the sensor while still locked may damage it.

Notes
The bottom sensor and upper sensor must be in alignment with each other.

When using a black mark detection sensor (Reflective sensor)

- **Set the bottom sensor at a position so that the center of the sensor window is in alignment with the center of the black line.**

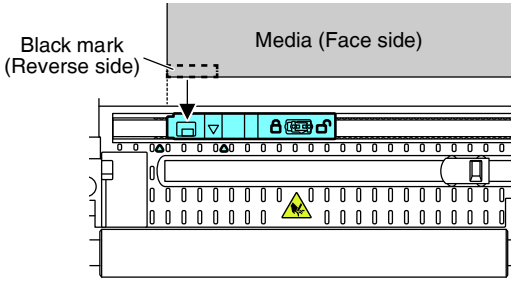

Notes
● Do not install the upper sensor directly above the bottom sensor. Normal operation may not be possible.

When using the continuous media detection sensor (reflective sensor)

- **Move the bottom sensor close to the center of the width of the media.**

  Be careful that media with black marks does not pass the media sensor.

Notes
● Do not install the upper sensor directly above the bottom sensor. Normal operation may not be possible.

3.4 Connecting the AC Adapter

CAUTION

- Use the dedicated AC adapter designed for this device.
- Make sure of the following before connecting the AC adapter.
  The power switch on the printer is turned off.
  The plug of the AC cord is removed from the electrical outlet.
- Insert the AC adapter connector completely into the DC jack.

1. Insert the DC plug on the output side of the AC adapter into the DC jack in the printer.

Standard model

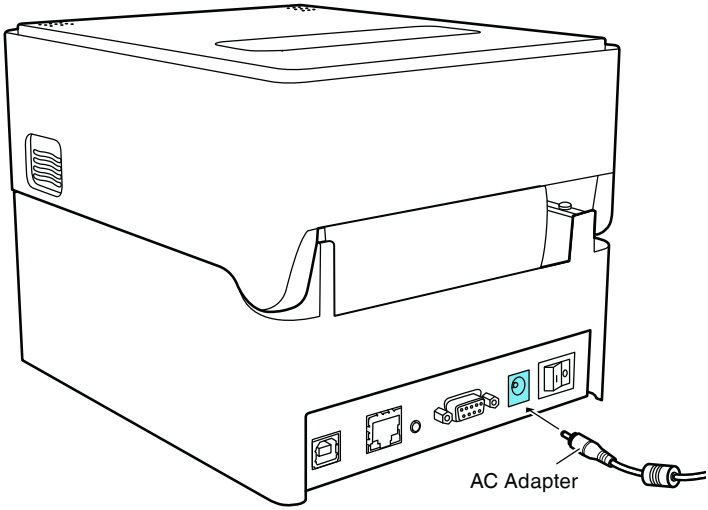

Optional interface model

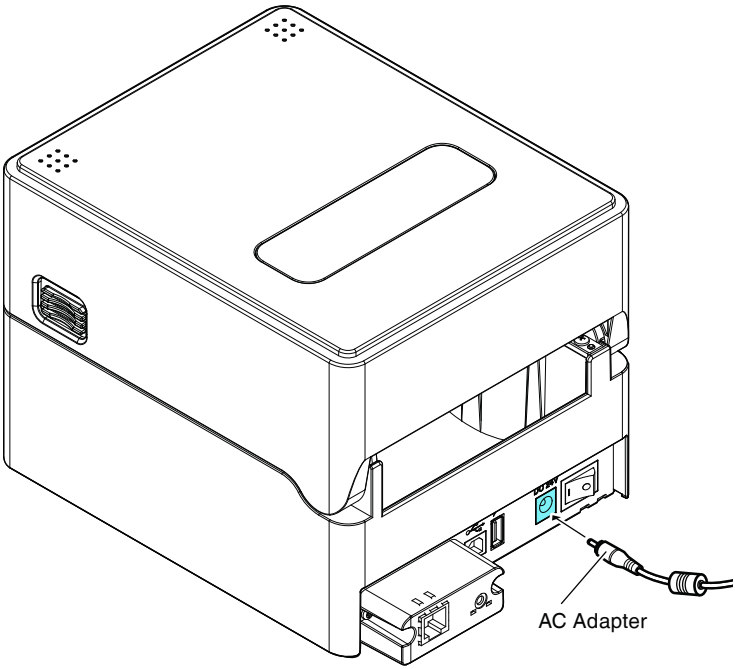

2. Insert the plug of the AC cord into an electrical outlet.

For a model with an AC adapter storage case

- Insert the plug of the AC cord into the AC port.

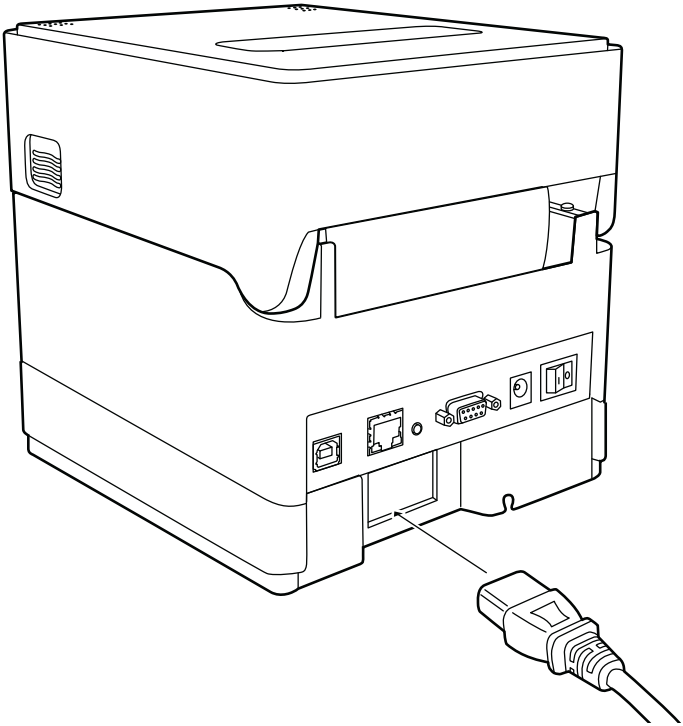

3.5 Connecting the Printer to a Host Computer

Use the following procedure to connect this printer to a host computer.

CAUTION

- Do not connect a USB cable to the wired LAN interface. Doing so may damage connectors.

Notes

- Interface cables are required to connect the printer to a host computer.
- When using an expansion interface, do not use two or more interfaces at the same time (the printer gives priority to USB on the main unite side).

1. Turn off the power to the printer and host computer.

2. Insert the cable into the appropriate interface port at the back of the printer.

Tighten any locking screws to secure the cable.

CL-E300/CL-E303

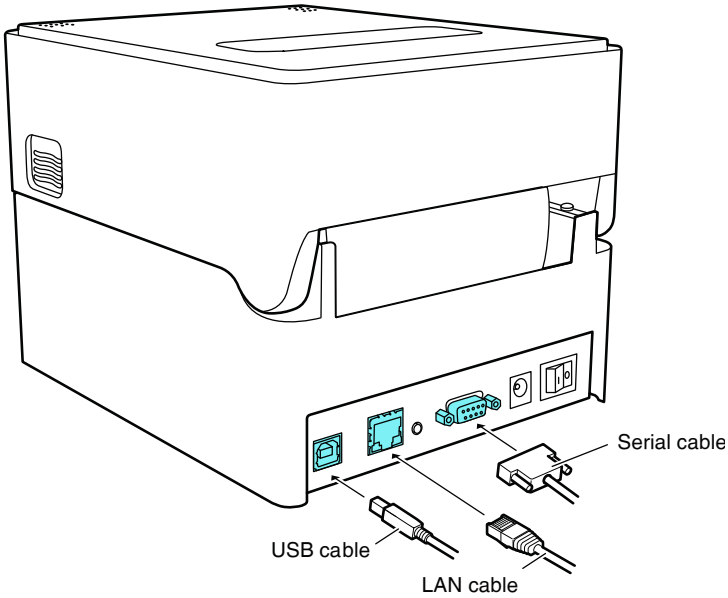

CL-E300EX/CL-E303EX/CL-H300SV

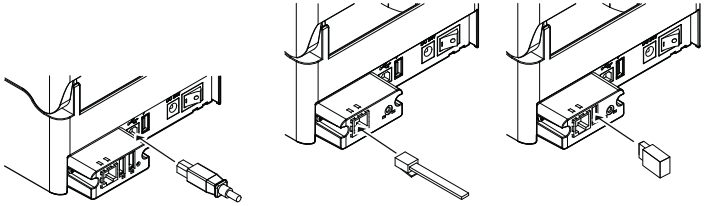

USB cable (Type-B) LAN cable Wireless LAN adapter

3. Insert the other end of the cable into the appropriate interface port in the host computer.

Tighten any locking screws to secure the cable.

Using an Ethernet connection

Configure network settings as necessary.

Refer to 5. Configuring the Wired LAN Network Settings Using the Utility Software

Refer to 5.2 NetToolK

3.6 Connecting with a Peripheral Device

Connect a peripheral device as described in the following procedure. For details on this board, including explanations about the USB host function and XML peripheral device support, refer to the separate manual.

1. Turn off the power.

2. Connect the cable of a peripheral device to this port.

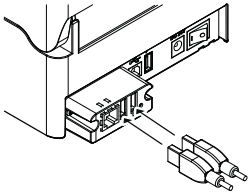

USB cable (Type-A)

Notes
A peripheral device cannot be controlled if it is connected to the USB power supply port. Be sure to connect it to the USB port of the interface board.

3.7 USB Power Supply Port

Power (max. 2.1 A) can be supplied to a mobile device or other USB device by connecting the cable of the USB device to the power supply port.

Connecting Mobile Device or Other Device

1. Turn off the power.

2. Connect the cable of a mobile device or other device to the USB power supply port.

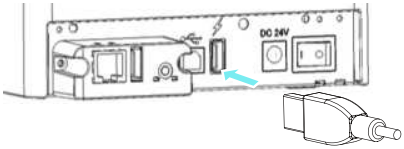

Notes

- This port does not support USB data communication.
- Power may not be able to be supplied depending on the USB device to be used.
  In this case, use the device's dedicated AC adapter or battery charger.
- A USB cable for power supply is not included with this product.
  Use a commercially available USB cable or the one that comes with the USB device.

3.8 Install the Printer Driver

Install the printer driver onto the host computer.

Printer drivers are available for download from the Citizen Systems support website.

The latest documentation, drivers, utilities, and other support information are also available from this website.

https://www.citizen-systems.co.jp/en/printer/download/

Once a printer driver has been downloaded, follow the on-screen instructions to install the driver.

4. Configuring Printer Settings Using the Specialized Utility

Use the LabelPrinterUtility configuration application to change printer settings.

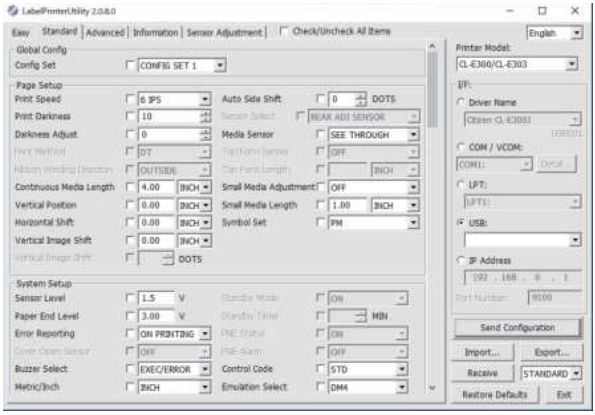

Refer to the following sections for more information on obtaining and using LabelPrinterUtility.

Refer to 4.2 Obtaining the LabelPrinterUtility

Refer to 4.3 Using the LabelPrinterUtility

4.1 List of Settings

This section describes the procedures to configure printer settings using the LabelPrinterUtility.

For details on changing various settings of a wired/wireless LAN expansion interface board, refer to the following explanation.

Refer to 5.2 NetToolK

The following table lists the settings configurable with “LabelPrinterUtility”.

Home menu: Page Setup

Sub menu	Default	Configurable range	Notes
Print Speed	6 IPS	CL-E300/CL-E300EX/CL-H300SV: 2 to 8 IPS CL-E303/CL-E303EX: 2 to 6 IPS	Sets the print speed * In the peeler model, even when this is set to 5 IPS or higher, the setting is 4 IPS.
Print Darkness	10	00 to 30	Adjusts the print density
Darkness Adjust	00	-10 to 10	Fine adjustment of the density command
Continuous Media Length	4.00 inch 101.6 mm	CL-E300/CL-E300EX/CL-H300SV: 0.25 to 99.99 inch 6.4 to 2539.7 mm CL-E303/CL-E303EX: 0.25 to 50.00 inch 6.4 to 1,270.0 mm	Sets the length of continuous media The lower row shows millimeter values when using the printer in mm mode
Vertical Position	0.00 inch 0.0 mm	-1.00 to 1.00 inch -25.4 to 25.4 mm	Adjusts the printing start position
Horizontal Shift	0.00 inch 0.0 mm	-1.00 to 1.00 inch -25.4 to 25.4 mm	Adjusts the horizontal image position
Vertical Image	(Datamax) 0.00 inch 0.0 mm	0.00 to 32.00 inch 0.0 to 812.8 mm	Adjusts the start position for creating images
	(Zebra/Eltron) 000 dots	-120 to 120 dots	
Auto Side Shift	0 dots	0 to 15 dots	Shifts the horizontal print position by the specified number of dots for each sheet/label. This is useful when significant load is placed on the portion of the thermal head, such as when printing vertical borders.
Media Sensor	See Through	See Through Reflect None	Selects the type of label sensor type
Small Media Adjustment	Off	On Off	Setting for small label support
Small Media Length	1.00 inch 25.4 mm	0.25 to 1.00 inch 6.4 to 25.4 mm	Sets the length for small label media
Symbol Set	PM	50 options	Sets the character set

Home menu: System Setup

Sub menu	Default	Configurable range	Notes
Sensor Level	1.5 V	0.0 V to 3.3 V	Sets the sensor threshold
Paper End Level	3.00 V	0.01 V to 3.30 V	Sets the paper end level

Sub menu	Default	Configurable range	Notes
Error Reporting	On Printing	On Printing Immediate	Error reporting setting
Buzzer Select	Exec/Err	Exec/Err All Error Key None	Sets the conditions at which the buzzer is triggered
Metric/Inch	Inch	Inch mm	Sets the unit of measure
Max Media Length	10.00 inch 254.0 mm	CL-E300/CL-E300EX/CL-H300SV: 1.00 to 99.99 inch 25.4 to 2539.7 mm CL-E303/CL-E303EX: 1.00 to 50.00 inch 25.4 to 1,270.0 mm	Sets the maximum length of label media
Settings Lock	Off	On Off	Prevents changes via setting commands
Keyboard Lock	Off	On Off	Prevents changes via key operation
Control Code	STD	STD ALT ALT-2	Changes the command mode for DMX mode (only when Datamax® emulation is selected)
Media Power Up	Off	On Off	Sets the media length measuring function when the power is turned on (only when Zebra® emulation mode is selected on international models)
CI Lock	Off	On Off	Prevents changes via CI commands (only when Zebra® emulation mode is selected on international models)
Emulation Select	DM4 (Datamax®) ZPI2 (Zebra®)	DM4 DMI DPP ZPI2 EPI2	Datamax®/Zebra® compatibility selection DM4 Datamax® 400 DMI Datamax® IClass™ DPP Datamax® Prodigy Plus® ZPI2 Zebra® ZPL2™ EPI2 Zebra® EPL2™
Emulation Auto Detect	Full Auto	On Off Full Auto	Sets the emulation sensing function (international models only)

Home menu: After Print

Sub menu	Default	Configurable range	Notes
AutoConfigure	On	On Off	Enables/disables the auto configuration of optional equipment. On - Enables auto configuration (automatically sets each mode when equipped with a cutter or peeler, regardless of the Function Select setting) Off - Disables auto configuration. Turn this setting Off and select operation with Function Select when you do not want to use the cutter if installed. * In the peeler model, print modes other than the peeling mode cannot be used, so the AutoConfigure must be On.
Function Select	Tear	Off Tear Cut On(only valid for models with cutters) Peel (enabled only for the peeler model)	Selects the operation mode when AutoConfigure is Off. Each option has a specified media stop position. Enables operation of the applicable device when selected.
Cutter Action * Only valid for models with cutters	Backfeed	Backfeed Through	Cutter action setting Prints only when AutoConfigure for a model with a cutter is On or when [Backfeed] is selected for the Function Select setting. The [Backfeed] option performs a back-feed after each cut operation. The [Through] option continues the print operation at the trailing edge of each sheet/label from the first sheet/label to the n-1 sheet/label when the number of copies is set to n. A back-feed operation is then performed at the trailing edge of the last sheet/label or when printing a single sheet/label.
Paper Position	0.00 inch 0.00 mm	STD (Printing start position (platen-centered)) 0.00 to 2.00 inch 0.0 to 50.8 mm Cut/Tear/Peel (Tear position/Peal On position/Cut On position) -1.00 to 1.00 inch -25.4 to 25.4 mm	Adjusts the stop position This setting is dependent on the Metric/Inch setting. Each device has an initial stop position as configured with the settings previously described. This setting sets a relative value from these other settings.

Sub menu	Default	Configurable range	Notes
Feed Key Action	Feeds Media	Repeat Last Set Repeat Last One Feeds Media	Changes the operation of the FEED key Repeat Last Set Reprints a set of labels. This setting is ignored when Zebra® emulation mode is selected. Repeat Last One Reprints the last page only. Prints only 1 sheet/label from the current number when using counts. Feeds Media Functions as the FEED key. Disables reprinting.

Home menu: Interface *1

Sub menu	Default	Configurable range	Notes
RS-232C Baud Rate *2	9600	115200 57600 38400 19200 9600 4800 2400	Sets the baud rate of the serial interface
RS-232C Parity *2	None	None Odd Even	Sets the communication parity of the serial interface
RS-232C Length *2	8 bits	8 bits 7 bits	Sets the data length for the serial interface
RS-232C Stop bit *2	1 bit	1 bit 2 bits	Sets the stop bits for the serial interface
RS-232C X-ON *2	Yes	Yes No	Enables/disables X-ON flow control for the serial interface
USB Device Class	Printer	Printer VCOM	Sets the USB device class
USB VCOM Protocol	Auto	Auto DTR X-ON	Sets the USB VCOM protocol (flow control)

Sub menu	Default	Configurable range	Notes
IPv4 Address *3	169. 254. 001. 010	000. 000. 000. 000 to 255. 255. 255. 255	Sets the IPv4 network address
IPv4 Subnet Mask *3	255. 255. 000. 000	000.000.000.000 to 255.255.255.255	Sets the IPv4 subnet mask
IPv4 Gateway *3	000. 000. 000. 000	000.000.000.000 to 255.255.255.255	Sets the IPv4 gateway
IPv4 DHCP *3	On	On Off	Enables/disables IPv4 DHCP
Host Name *3	CL-E300: CL-E321/300Print Server CL-E303: CL-E331/303Print Server	Any length from 0 to 31 characters long using single-byte letters (uppercase and lowercase), numbers, and symbols	Name to assign to the device to identify the printer
Port Number *3	9100	1024 - 65535	Print port number
Timeout *3	60	0 - 300	Timeout time (in seconds) for connection with host machine When the set number of seconds elapses without data being received from the host in the state in which a session is established, a timeout occurs and the session is disconnected. If this is set to 0, there will be no timeout.
Action at timeout *3	Close all	Close all Move next	Pending session processing when timeout Sets whether to disconnect all other sessions or to enable sending and receiving when there are two or more sessions established and a timeout occurs for the session that was established first
Transmits buffered data *3	Disable	Disable Enable	Transmission data processing when host machine not connected
IPv6 *3	On	On Off	Enables/disables IPv6

Sub menu	Default	Configurable range	Notes
Fixed IPv6 Address *3	On	On Off	Enables/disables IPv6 static network address
IPv6 Address *3	0.0.0.0.0.0.0 .0. 0.0.0.0.0.0.0 .0	0.0.0.0.0.0.0.0. 0.0.0.0.0.0.0.0 - 255.255.255.255. 255.255.255.255. 255.255.255.255. 255.255.255.255	Sets a IPv6 network address Example: If the network address you wish to set is 2001:0db8:0000:0123:4567:89ab:cdef:feed, specify the value for each network address field in decimal notation separated by periods as shown below. 32.1.13.184.0.0.1.35.69.103.137.171.205.239.254.237
IPv6 Prefix Length *3	64	1 - 128	IPv6 prefix length setting (in bits)
IPv6 Gateway *3	0.0.0.0.0.0.0 .0. 0.0.0.0.0.0.0 .0	0.0.0.0.0.0.0.0. 0.0.0.0.0.0.0.0 - 255.255.255.255. 255.255.255.255. 255.255.255.255. 255.255.255.255	IPv6 gateway address setting For how to specify an address, refer to the Notes column in “IPv6 Address”.

*1 Contains menus of option interface settings that can be configured for this printer.

*2 CL-E300/CL-E303 or Serial Interface option card model only

*3 CL-E300/CL-E303 only

Home menu: Interface

(Enabled only when a Bluetooth interface board is installed.)

Sub menu	Default	Configurable range	Notes
Bluetooth Security Setting	Medium	Medium High	Sets the security level of the Bluetooth interface
Bluetooth Connection Destination	All Devices	All Devices Authenticated Devices	Sets the connection destination of the Bluetooth interface
Bluetooth Device Search	On	On Off	Sets device searching of the Bluetooth interface
Bluetooth iOS Reconnect Request	On	On Off	Sets the reconnect request made to iOS by the Bluetooth interface
Bluetooth PIN Code	-	****	PIN code of the Bluetooth interface The initial setting is the last 4 digits of the 12-digit address (excluding the :)
Bluetooth Device Name	-	CL-E300_XX CL-E303_XX CL-H300SV_XX	Device name of the Bluetooth interface

Home menu: Global Configuration

Sub menu	Default	Configurable range	Notes
-	Config Set 1	Config Set 1 Config Set 2 Config Set 3	Configuration number setting

Home menu: Machine Information

Sub menu	Default	Configurable range	Notes
Model Number *1	-	CL-E300	Displays the model name * Appears as “CL-E300EX” for the CL-E300EX model, “CL-E303” for the CL-E303 model, “CL-E303EX” for the CL-E303EX model, and “CL-H300SV” for the CL-H300SV model
Serial Number	-	RH********	Displays the serial number
Boot Version *1	-	*.*	Displays the boot version
ROM Version *1	-	********	Displays the ROM version
ROM Date *1	-	**/**/**	Displays the ROM creation date
ROM Check-Sum *1	-	****	Displays the ROM checksum
Head Check *2	-	**	Displays whether the resistance value of the head is within the specification range
Print Counter *3	-	****.*** km	Displays the print counter
Service Counter *3	-	****.*** km	Displays the service counter
Cut Counter	-	*******	Displays the cut counter only for models with cutters
Sensor Monitor *1	-	*.* V	Displays the sensor level
Optional Interface *2	-	**********	Displays the type of interface board installed
MAC Address *1	-	**.**.**.**.**.**	Displays the MAC address

*1 This cannot be obtained with LabelPrinterUtility. To check the value, print the list of settings.

*2 CL-E300EX/CL-E303EX/CL-H300SV only

*3 If the double heat function is enabled, the value doubles.

This function reduces print fading.To enable this function, configure the setting via Windows driver properties or LabelPrinterUtility. See the respective manual for how to configure the setting.

Refer to 7.3 Configuration Print Mode

4.2 Obtaining the LabelPrinterUtility

1. Access the following URL from a PC to download the LabelPrinterUtility.

https://www.citizen-systems.co.jp/en/printer/download/

2. Save the downloaded LabelPrinterUtility.exe to the desired folder.

4.3 Using the LabelPrinterUtility

- **Start LabelPrinterUtility.exe.**

  Refer to the user manual for more information on using the application.

5. Configuring the Wired LAN Network Settings Using the Utility Software

You can check and change the settings of the wired LAN interface board by using utility software that runs in Windows.

The utility software includes CITIZEN Network Seeker which can be used with CL-E300/CL-E303 and NetToolK which can be used with CL-E300EX/CL-E303EX/CL-H300SV.

5.1 Network Seeker

(1) Starting Network Seeker

After obtaining the program “NetSeeker.exe” from our website, double click the program. A dialog box appears.

Start a search for printers by clicking the “Seek” button.

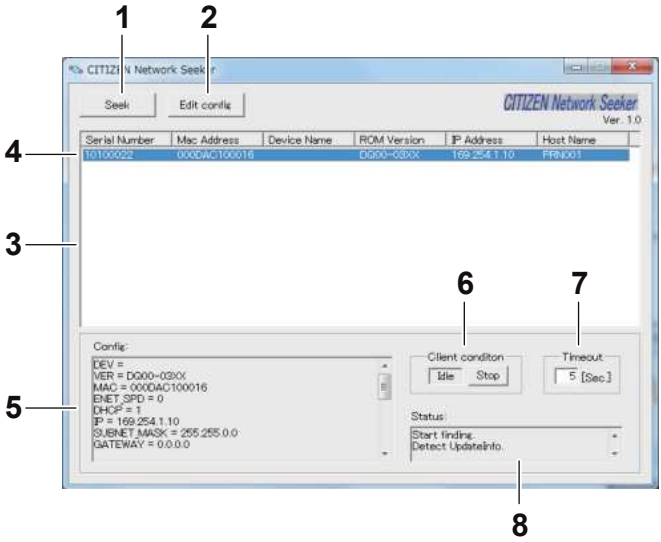

1: “Seek” button

Start a search for Ethernet interface boards on the network.

Waits for a response during the time configured with [Communication timeout].

2: “Edit config” button

Change the settings of the selected board.

3: Board information list

Single click to select a board and double click to change settings.

4: Board information

Single click to select a board and double click to change settings.

5: Configuration display section

View the settings of the selected board.

6: Client condition display

When “Busy” is displayed, operations to search, change settings, and so on are prohibited.

If you click “Stop”, the “Busy” status is cleared forcibly.

7: Communication timeout

You can configure the time-out duration for searches and other operations.

8: Status log

View the status of the utility.

(2) Changing Settings

You can configure an Ethernet interface board by selecting it at the main dialog box, and then clicking “Edit config”.

- These are unalterable parameters.

  These parameters are for display purposes only.

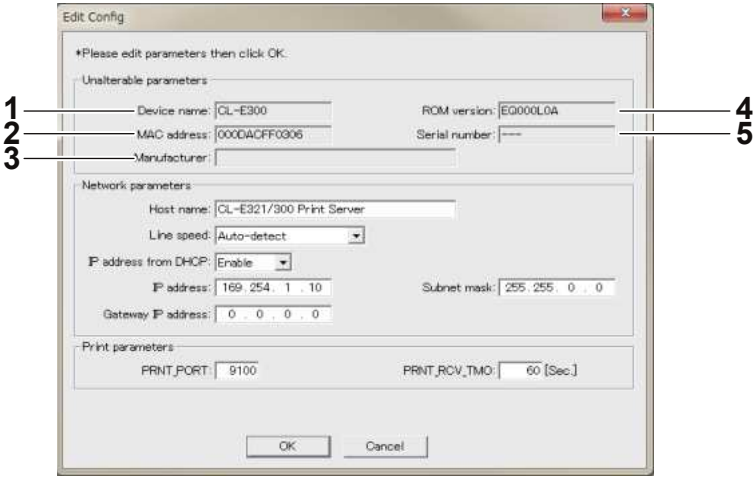

1: Device name

2: MAC address

3: Manufacturer

4: ROM version

5: Serial number

- These are changeable parameters.
  Users can change these parameters.

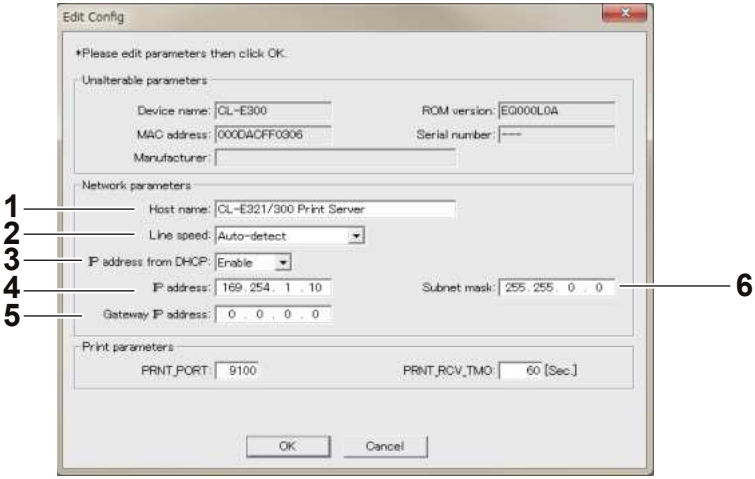

1: Host name

2: Line speed

3: IP address from DHCP

4: IP address

5: Gateway IP address

6: Subnet mask

5.2 NetToolK

(1) Installing the NetToolK

After obtaining “NetToolkSetup.exe” from our website, start it.
Refer to the user manual for more information on using the installer.

(2) Information list window

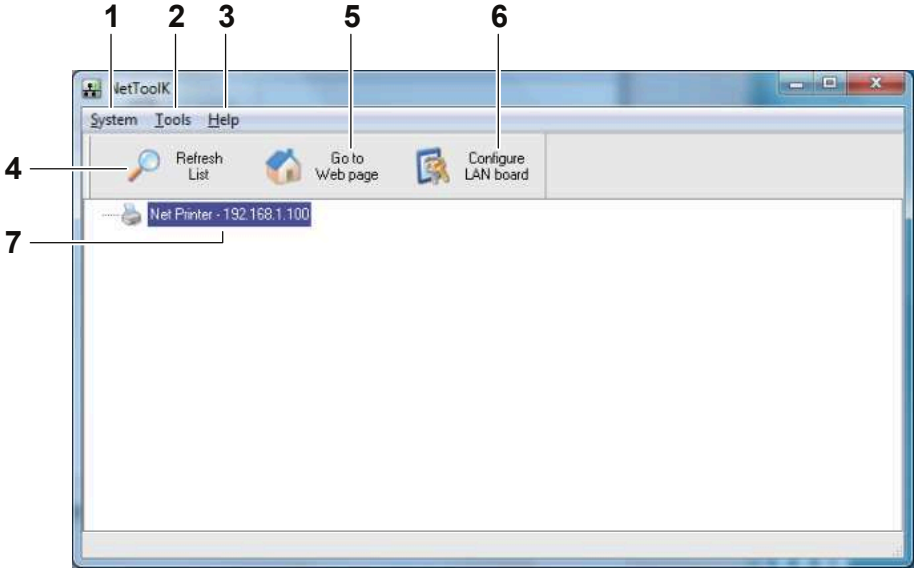

1: ”System”

Select ”System” – ”Exit” to exit the NetToolK.

2: ”Tools”

Select ”Tools” – ”Settings” to switch the display of the LAN interface board information.

When the “Show LAN board information” check box is selected, the LAN interface board operation status can be displayed as shown below.

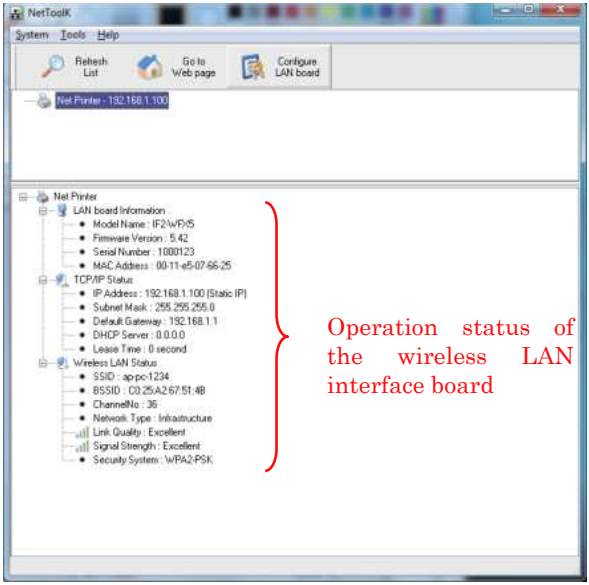

3: ”Help” menu

Select ”Help” – ”About” to display the version information of NetToolK.

4: ”Refresh List” button

Refresh the list of the LAN interface board. The application periodically refreshes the list, but you can refresh the list manually by clicking this button.

5: ”Go to Web Page” button

Select the LAN interface board you want to configure, and then click “Configure using a web browser”. The browser starts and displays the Web manager.

6: ”Configure the LAN Board” button

Select the LAN interface board you want to configure, and then click “Configure Select the LAN See Board”. See Setup Window.

7: LAN interface board list

The list displays the LAN interface boards connected to network.

The LAN interface boards connected to the same subnet are displayed.

(3) Setup Window

You can configure the LAN interface board by selecting the LAN interface board from the list screen and clicking “Configure the LAN Board”.

To login at the login screen, enter a username and password.

Username: admin (factory default)

Password: admin (factory default)

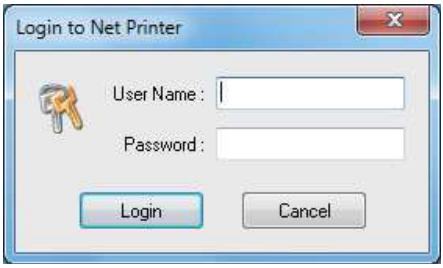

1: “General“ Tab

Use the “General“ tab to configure WLAN board name and IP address.

2: “Wireless LAN“ Tab

Use the “Wireless LAN“ tab to configure LAN.

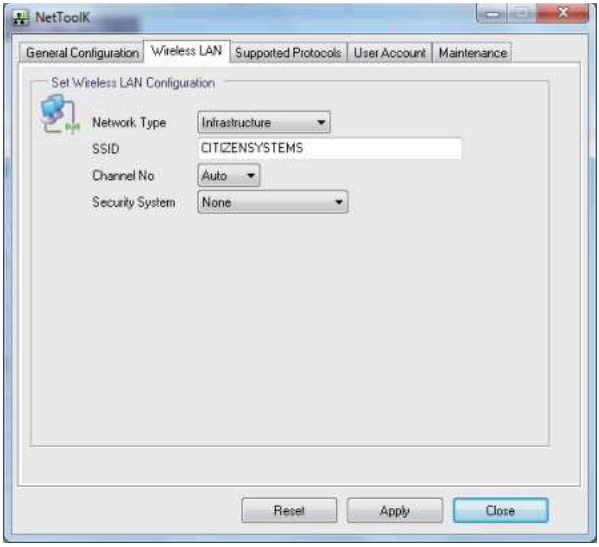

3: “Supported Protocols“ Tab

Use the “Supported Protocols" tab to enable LPR and the RAW protocol, set printer timeout duration, enable "Priority to Ethernet", and enable UPnP.

4: “User Account“ Tab

Use the “User Account“ tab to change the administrator name and password.

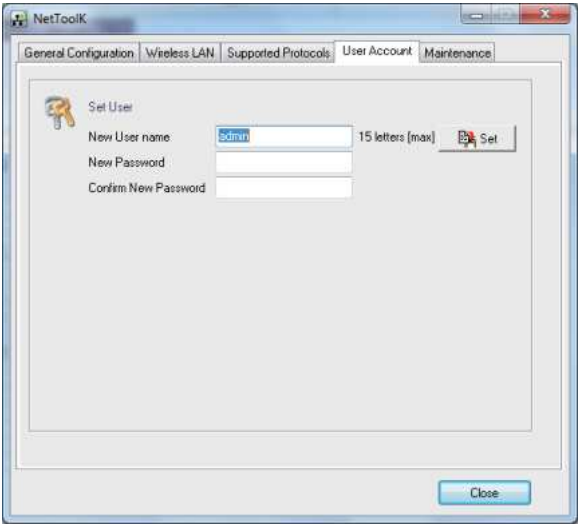

5: “Maintenance“ Tab

Use the “Maintenance“ tab to restart the wired/wireless LAN interface board, return the settings to the factory default settings, and update the firmware.

* Contact us for details on updating the firmware.

Notes

- If you forget the new username and password, settings must be returned to the factory default settings.
- If the computer at which you are performing configuration and LAN interface board have different subnet values, a message like the one shown below appears in red letters.

  If this message appears, set the IP address using the “Configure WLAN Board” button before configuring the LAN interface board.

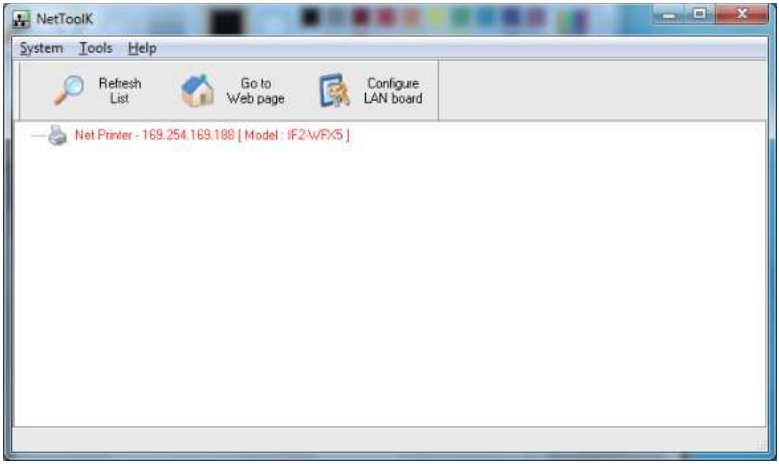

Only the server name and IP address can be configured.

Configure the IP address correctly one time before configuring the wireless LAN interface board.

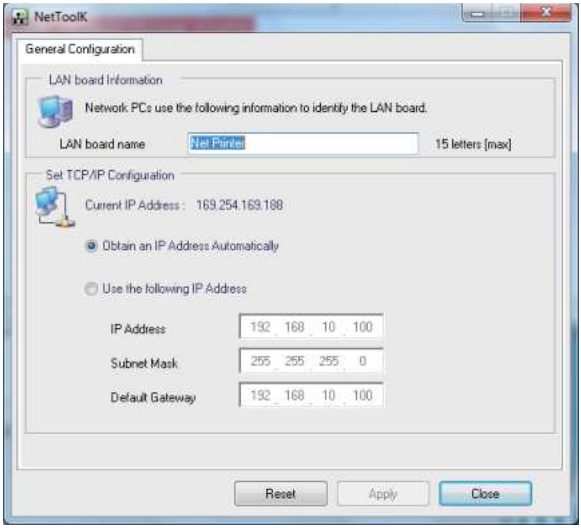
NetToolK
General Configuration
LAN board Information
Network PCs use the following information to identify the LAN board.
LAN board name
Net Printer
15 letters [max]
Set TCP/IP Configuration
Current IP Address : 169.254.169.188
Obtain an IP Address Automatically
Use the following IP Address
IP Address
192 168 10 100
Subnet Mask
255 255 255 0
Default Gateway
192 168 10 100
Reset
Apply
Close

6. Configuring Printer Settings Using LinkServer

Printer and network settings can be configured using a Web browser or Android app via the LinkServer function built into the CL-E300/CL-E303.

Notes
For Android, you need to download the app and provide a USB cable yourself.

The Android app can be downloaded from Google Play.

https://play.google.com/store/apps/details?id=com.citizen.app.linkserver

6.1 LinkServer user roles

LinkServer has the following three user roles available: User, Operator, and Administrator

The menus that appear for each user role can be changed to restrict operational access to LinkServer.

The Home screen for the user role appears when first connecting.

6.2 LinkServer menu configuration

The following figure illustrates the LinkServer menu configuration.

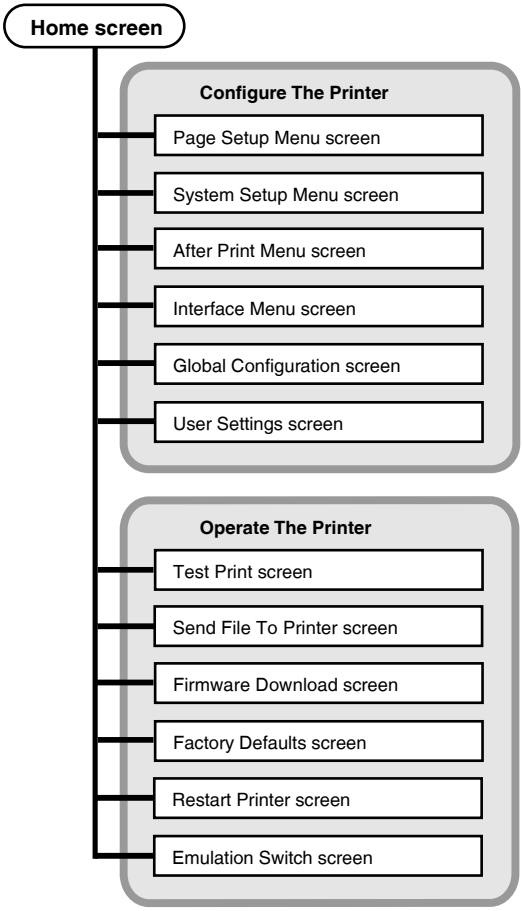

6.3 LinkServer connection procedure

Wired LAN

1. **Open a Web browser and enter the IP address of the desired printer into the address bar (area circled in red).**

   The example illustrates the entry of “http://169.254.1.10”.

2. Press the [LOG IN] to display the authentication window.

3. Enter your user name and password.

The default authentication credentials for the Operator role are as follows.

- User name: Operator
- Password: Operator

The default authentication credentials for the Administrator role are as follows.

- User name: Admin
- Password: Admin

The user name and password for the Operator and Administrator roles can be changed in the User Settings menu. User names and passwords can contain up to 20 single-byte, alpha-numeric characters and symbols.

After successful authentication, the Home screen for the Operator or Administrator role appears.

Administrator Home Screen

The menus that appear for the User and Operator roles can be changed from the User Settings menu.

4. Press the Menu button on the Home screen to perform printer operations.

- Printer Information: Displays printer information.
- Configure The Printer: Provides access to the same settings as configured with LabelPrinterUtility.
- Operate The Printer: Used to operate the printer.

5. Once you are finished, press the [LOG OUT] button to log out.

The Home screen for the User role appears again after logging out.

USB (Android device)

1. Preparation

You will need a so-called USB OTG (On-The-Go) adapter.

Which has a micro USB or Type-C male connecter on the Android side (depending on your Android device) and a Type-A female connecter on the other side.

Then you can connect a regular USB cable for printer which has a Type-A male and Type-B male to connect to a printer.

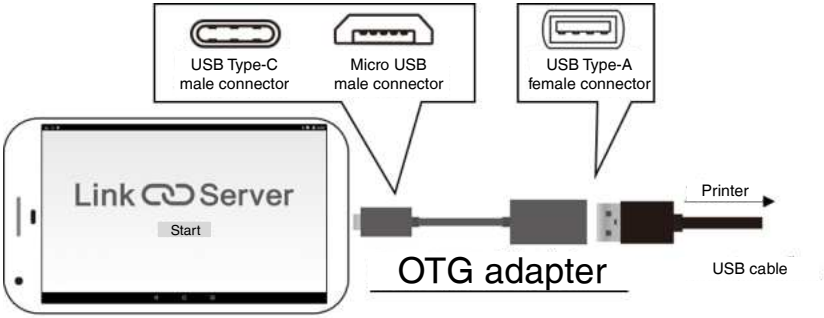

2. Usage

The LinkServer app automatically starts up when a supported printer model is connected by USB to your Android device.

The app shows you the printer information or lets you set up the printer.

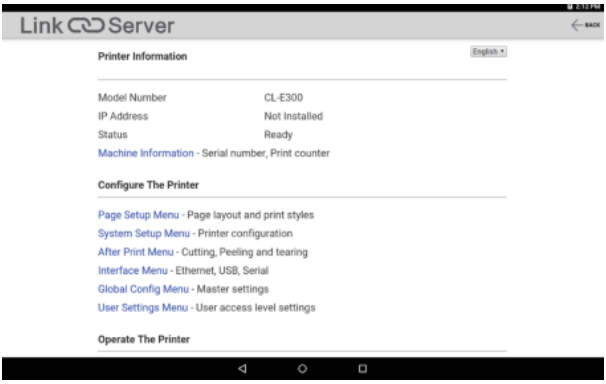

Press “SAVE” to apply changes.

The printer will automatically restart and save the new settings.

Wait until the printer starts up completely if you wish for further operations.

Link Server
Page Setup Configuration
Print Speed
Print Darkness
Darkness Adjust
Continuous Media Length
inch
Vertical Position
inch
Horizontal Shift
inch
Vertical Image Shift
inch
Auto Side Shift
Media Sensor
Small Media Adjustment
Small Media Length
inch
Symbol Set
Save settings and
return to main menu

7. Configuring the Printer Using the Operation Panel

The following operations can be performed from the control panel after changing the printer operation mode to the special mode.

- Adjust media sensors
- Print test samples
- Print the settings configuration
- Change emulation modes
- HEX dump mode
- Initialize the printer
- * This device is not equipped with the [Menu Configuration Mode] featured in other models.

1. **With the top cover closed, turn on the power to the printer while pressing and holding the FEED key.**

   The printer changes to the special mode.

   The buzzer emits 3 short tones and the status LED flashes alternately in green and red.

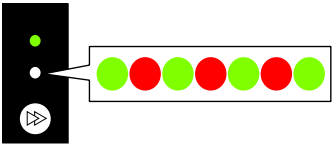

2. Press the FEED key to select the desired operation mode.

Mode	Buzzer	Status LED	
		Color	Interval
Special function mode	3 short tones	Alternately in green and red	Flashes quickly
Press the FEED key ↓			
Sensor Adjustment Mode	1 short tones	Green	Flashes
Press the FEED key ↓			
Test print mode	2 short tones	Green	Flashes quickly
Press the FEED key ↓			
Configuration print mode	3 short tones	Amber	Flashes
Press the FEED key ↓			
Emulation switching mode	4 short tones	Red	Flashes quickly
Press the FEED key ↓			
HEX dump mode	5 short tones	Red	Flashes
Press the FEED key ↓			
Initialization mode	6 short tones	Red	Flashes quickly
Press the FEED key ↓			
Returns to the sensor adjustment mode.			

3. Once the desired operation mode has been selected, press and hold the FEED key for at least 3 seconds.

4. Release the FEED key once the buzzer emits a long tone.

The printer is now in the desired operation mode.

5. After finishing use of operation modes, press and hold the FEED for at least 3 seconds to return to the normal startup mode.

After you have finished configuring each mode, restart the printer.

- **To return to the normal startup mode without selecting an operation mode after changing to the special function mode, press and hold the FEED key for at least 3 seconds.**

  If you continue to press and hold the FEED key for at least 3 seconds after the buzzer emits a long tone, the buzzer will emit 4 short tones, and then printer restarts.

  The printer restarts, and changes to normal mode.

7.1 Sensor Adjustment Mode

Use this mode to adjust media sensors (upper or lower) in accordance with the media used.

Use the label printer utility to adjust the media sensor easily from the host computer.
If you are not using the label printer utility, use the following procedure to adjust the sensor.

Refer to 4.2 Obtaining the LabelPrinterUtility

Refer to 4.3 Using the LabelPrinterUtility

Set the sensor position and media before starting this adjustment procedure.

Setting label detection sensor (transparent sensor) positions and media

1. Align the bottom sensor and upper sensor with each other at the same position.

Refer to When using a label detection sensor (transparent sensor)

2. Peel a label and set the media so that only the backing paper (glassine paper) reaches the platen roller and media sensor.

If the media has black lines, do not set the media so that a black line is between the sensors.

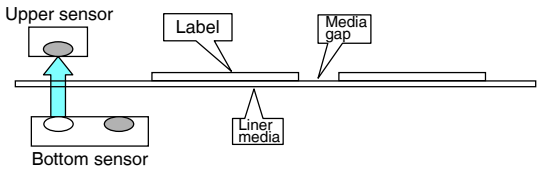

3. Adjust the sensors.

Refer to Sensor adjustment (when using the label detection sensor (transparent sensor) or black mark detection sensor (reflective sensor))

Setting black mark detection sensor (reflective sensor) positions and media

1. Adjust the bottom sensor so that it is underneath the media.

2. Set the media so that the media covers the platen roller and media sensor.

Set that media so that black lines or gaps between labels do not cover the sensor.

- Using continuous media and label media without gaps

  Set the media so that a section without a black line (or label face stock for label media) does cover the platen roller and media sensor.

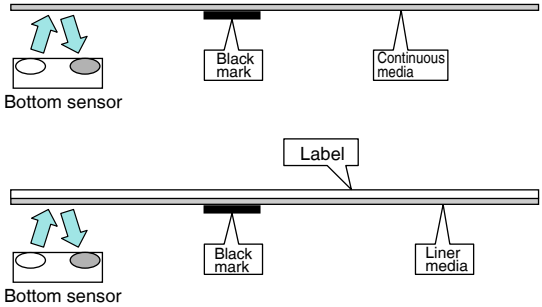

- Using label media with gaps

  Peel a label and set the media so that only the backing paper (glassine paper) reaches the platen roller and media sensor.

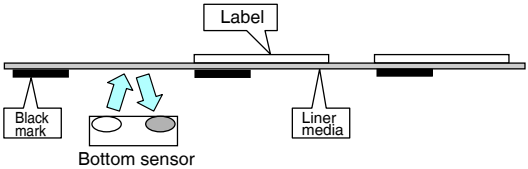

3. Adjust the sensors.

Refer to Sensor adjustment (when using the label detection sensor (transparent sensor) or black mark detection sensor (reflective sensor))

Notes
Do not install the upper sensor directly above the bottom sensor. Normal operation may not be possible.

Setting continuous media detection sensor (reflective sensor) positions and media

1. Adjust the bottom sensor so that it is underneath the media.

2. Set the media so that it covers the platen roller and media sensor.

If the media has black lines, do not set the media so that a black line is between the sensors.

3. **Adjust the sensors.**

Refer to Sensor adjustment (when using the continuous media detection sensor (reflective sensor))

Notes
Do not install the upper sensor directly above the bottom sensor. Normal operation may not be possible.

Sensor adjustment (when using the label detection sensor (transparent sensor) or black mark detection sensor (reflective sensor))

1. **Turn on the power to the printer while pressing and holding the FEED key to start the printer in special function mode.**

2. **Press the FEED key once to select sensor adjustment mode.**

   The buzzer emits 1 short tone.

   The status LED also flashes in green.

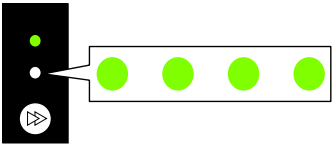

3. **Press and hold the FEED key for at least 3 seconds.**

4. **Release the FEED key once the buzzer emits a long tone and then press the FEED key again.**

   The printer is now in sensor adjustment mode.

5. **Press the FEED key to select either the label detection sensor (transparent sensor) or black mark detection sensor (reflective sensor).**

   Every press of the FEED key toggles between the label detection sensor (transparent sensor) and black mark detection sensor (reflective sensor) options.

Sensor	Buzzer	Status LED	
		Color	Interval
label detection sensor (Transparent sensor)	1 short tones	Green	Flashes
Press the FEED key ↕			
black mark detection sensor (Reflective sensor)	2 short tones	Green	Flashes quickly

6. **Press and hold the FEED key for at least 3 seconds.**

7. **Release the FEED key once the buzzer emits a long tone.**

   The sensor adjustment process starts.

   - Once sensors have been adjusted, the buzzer emits 1 short tone.
   - The buzzer emits 1 long tone if sensor adjustment fails. If this happens, check the sensor and media positions.

8. **To save and complete the sensor adjustments, press and hold the FEED key for at least 3 seconds.**

   The buzzer emits 4 short tones, and the printer restarts.

Sensor adjustment (when using the continuous media detection sensor (reflective sensor))

1. **In the online setting mode, set the media sensor mode to the continuous media detection sensor (reflective sensor) mode, and turn the power off.**

Refer to 8. Online Configuration Mode

2. **Turn on the power to the printer while pressing and holding the FEED key to start the printer in special function mode.**

3. **Press the FEED key once to select sensor adjustment mode.**

   The buzzer emits 1 short tone.

   The status LED also flashes in green.

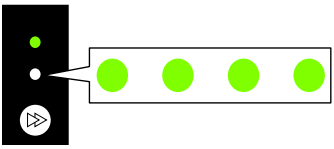

4. **Press and hold the FEED key for at least 3 seconds.**

5. **Release the FEED key once the buzzer emits a long tone and then press the FEED key again.**

   The printer is now in sensor adjustment mode.

6. Press the FEED key to select the continuous media detection sensor (reflective sensor).

Each press of the FEED key toggles between the label detection sensor (transparent sensor), the black mark detection sensor (reflective sensor), and the continuous media detection sensor (reflective sensor) options.

Sensor	Buzzer	Status LED	
		Color	Interval
label detection sensor (Transparent sensor)	1 short tones	Green	Flashes
Press the FEED key ↓			
black mark detection sensor (Reflective sensor)	2 short tones	Green	Flashes quickly
Press the FEED key ↓			
continuous media detection sensor (Reflective sensor)	3 short tones	Amber	Flashes
Press the FEED key ↓			
Returns to the label detection sensor (transparent sensor).			

7. Press and hold the FEED key for at least 3 seconds.

8. Release the FEED key once the buzzer emits a long tone.

The sensor adjustment process starts.

- Once sensors have been adjusted, the buzzer emits 1 short tone.
- The buzzer emits 1 long tone if sensor adjustment fails. If this happens, check the sensor and media positions.

9. To save and complete the sensor adjustments, press and hold the FEED key for at least 3 seconds.

The buzzer emits 4 short tones, and the printer restarts.

7.2 Test print mode

This mode prints the test sample.

This printer can print test samples to label media and continuous media.

Printing test samples is a quick way to check print quality.

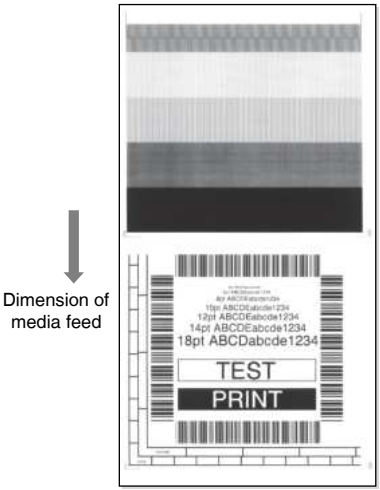

Load media and then perform the following procedure.

1. **Turn on the power to the printer while pressing and holding the FEED key to start the printer in special function mode.**

2. **Press the FEED key twice to select test print mode.**

   The buzzer emits 2 short tone.

   The status LED also flashes quickly in green.

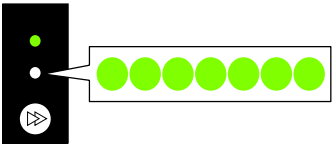

3. **Press and hold the FEED key for at least 3 seconds.**

4. **Release the FEED key once the buzzer emits a long tone.**

   The printer is now in test print mode.

5. Press the FEED key to select the media.

Each press of the FEED key toggles between label media and continuous media.

Media	Buzzer	Status LED	
		Color	Interval
Label media	1 short tones	Green	Flashes
Press the FEED key ↕			
Continuous	2 short tones	Green	Flashes quickly

6. Press and hold the FEED key for at least 3 seconds.

7. Release the FEED key once the buzzer emits a long tone.

The test print process starts.

- Once the test sample has been printed, press the FEED key to print another test sample without a feed operation.

8. Once the test sample has been printed, turn the power to the printer off and on again to reset the printer in the normal startup mode.

Notes
Normal mode printing can also be performed when the printer is in test print mode. Note that pressing the FEED key while the printer is in test print mode will not feed media. Instead, it will print a test sample.

7.3 Configuration Print Mode

This mode is used to print the printer settings configuration when using continuous media mode.

Printing the current settings configuration is a quick way to check the current configuration.

Example of printed settings configuration

Machine Information

Model Number	:	CL-E300
Serial Number	:	RH********
Boot Version	:	0.0
ROM Version	:	********
ROM Date(DD//MM//YY)	:	**/**/**
ROMCheck Sum	:	****
Print Counter	:	0001.234km
Service Counter	:	0001.234km
Cut Counter	:	0
Sensor Monitor	:	1.50V
MAC Address	:	ff-ff-ff-ff-ff-ff

Current Menu Setting

[Global Config Menu]

Config Set	:	1

[PageSetup Menu]

Print S[illegible]	:	[illegible] IPS
[illegible]ess Adjust	:	[illegible]
Paper Position	:	0.00 inch
Feed Key Action	:	Feeds Media

[Interface Menu]

RS-232C Baud rate	:	9600 bps
RS-232C Parity	:	None
RS-232C Length	:	8 bit
RS-232C Stop bit	:	1 bit
RS-232C X-ON	:	Yes
USB Device Class	:	Printer
USB VCOM Protocol	:	Auto
IPv4 Address	:	000.000.000.000
IPv4 Subnet Mask	:	000.000.000.000
IPv4 Gateway	:	000.000.000.000
IPv4 DHCP	:	On
IPv6	:	On

Load media and then perform the following procedure.

1. **Turn on the power to the printer while pressing and holding the FEED key to start the printer in special function mode.**

2. **Press the FEED key 3 times to select configuration print mode.**

   The buzzer emits 3 short tone.

   The status LED also flashes in amber.

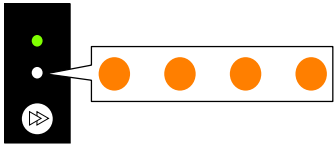

3. **Press and hold the FEED key for at least 3 seconds.**

4. **Release the FEED key once the buzzer emits a long tone.**

   The configuration print process starts.

   Once the configuration has been printed, the printer will be in the online state.

5. **To print configurations that include default settings, continue pressing and holding the FEED for at least 3 seconds without releasing your finger at step 4.**

6. **Release the FEED key once the buzzer emits a long tone and then press the FEED key again.**

   The process to print a configuration that includes default settings starts.

   Once the configuration has been printed, the printer will be in the online state.

7.4 Emulation switching mode

This mode is used to change the command set used.

1. **Turn on the power to the printer while pressing and holding the FEED key to start the printer in special function mode.**

2. **Press the FEED key 4 times to select emulation switching mode.**

   The buzzer emits 4 short tone.

   The status LED also flashes quickly in amber.

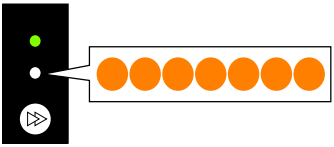

3. **Press and hold the FEED key for at least 3 seconds.**

4. **Release the FEED key once the buzzer emits a long tone.**

   The printer is now in emulation switching mode.

5. Press the FEED key to select an emulation switching mode.

Each press of the FEED key cycles through the emulation mode options of Datamax mode, Zebra mode, and Eltron mode.

Emulation mode	Buzzer	Status LED	
		Color	Interval
Datamax mode	1 short tones	Green	Flashes
Press the FEED key ↓			
Zebra mode	2 short tones	Green	Flashes quickly
Press the FEED key ↓			
Eltron mode	3 short tones	Amber	Flashes
Press the FEED key ↓			
Returns to Datamax mode.			

6. Press and hold the FEED key for at least 3 seconds.

7. Release the FEED key once the buzzer emits a long tone and then press the FEED key again.

The selected emulation mode is set, and the printer restarts.

7.5 HEX Dump Mode

This mode is used to print a hex dump list (data received by the printer represented in hex values) for confirmation of the data content.

Example of dump list printing

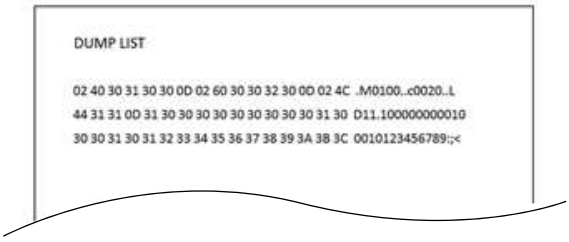

Load media and then perform the following procedure.

1. **Turn on the power to the printer while pressing and holding the FEED key to start the printer in special function mode.**

2. **Press the FEED key 5 times to select HEX dump mode.**

   The buzzer emits 5 short tone.

   The status LED also flashes in red.

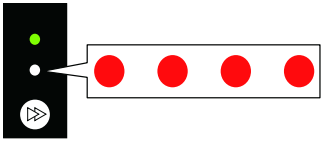

3. **Press and hold the FEED key for at least 3 seconds.**

4. **Release the FEED key once the buzzer emits a long tone.**

   The printer is now in HEX dump mode.

5. **Press the FEED key to select the media.**

   Each press of the FEED key toggles between label media and continuous media.

Media	Buzzer	Status LED	
		Color	Interval
Label media	1 short tones	Green	Flashes
Press the FEED key ↕			
Continuous	2 short tones	Green	Flashes quickly

6. **Press and hold the FEED key for at least 3 seconds.**

7. **Release the FEED key once the buzzer emits a long tone and then press the FEED key again.**

   The hex dump list print process starts.

8. **Once the HEX dump list has been printed, turn the power to the printer off and on again to reset the printer in the normal startup mode.**

7.6 Initialization Mode

This mode is used to initialize printer settings and the user memory area.

1. **Turn on the power to the printer while pressing and holding the FEED key to start the printer in special function mode.**

2. Press the FEED key 6 times to select initialization mode.

The buzzer emits 6 short tone.

The status LED also flashes quickly in red.

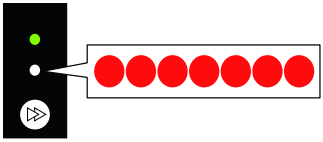

3. Press and hold the FEED key for at least 3 seconds.

4. Release the FEED key once the buzzer emits a long tone.

The printer is now in initialization mode.

5. Press the FEED key to select initialization of settings or initialization of the user memory area.

Each press of the FEED key toggles between settings initialization and user memory area initialization.

Initialization option	Buzzer	Status LED	
		Color	Interval
Settings initialization	1 short tones	Green	Flashes
Press the FEED key ↕			
User memory area initialization	2 short tones	Green	Flashes quickly

6. Press and hold the FEED key for at least 3 seconds.

7. Release the FEED key once the buzzer emits a long tone and then press the FEED key again.

Once the selected initialization process completes, the printer restarts.

8. Online Configuration Mode

1. Press and hold the FEED key for at least 3 seconds while the printer is online and not receiving data.

The printer is now in online configuration mode.

The buzzer emits 3 short tones and the status LED flashes alternately in green and red.

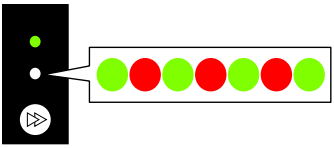

2. Press the FEED key to select media sensor mode.

Media sensor mode	Buzzer	Status LED	
		Color	Interval
Label detection sensor (transparent sensor) mode	1 short tones	Green	Flashes
Press the FEED key ↓			
Black mark detection sensor (reflective sensor) mode	2 short tones	Green	Flashes quickly
Press the FEED key ↓			
Continuous media detection sensor (reflective sensor) mode	3 short tones	Amber	Flashes
Press the FEED key ↓			
Bluetooth connection update mode *	4 short tones	Amber	Flashes quickly
Press the FEED key ↓			
All Bluetooth pairing information deletion mode *	5 short tones	Red	Flashes
Press the FEED key ↓			
Returns to the label detection sensor (transparent sensor) mode.			

* Only when a Bluetooth interface board is installed

3. Press and hold the FEED key for at least 3 seconds.

4. Release the FEED key once the buzzer emits a long tone.

The selected media sensor mode is set.

9. Clearing Jobs Stored in the Printer

Jobs stored in the printer can be cleared when the printer is paused.

1. **Press the FEED key if the printer is printing or receiving data.**

   The printer is now paused.

2. **Press and hold the FEED key for at least 3 seconds.**

   The buzzer emits 1 short tone.

3. **Release the FEED key.**

   One job has been cleared.

   Alternatively, continue to press and hold the FEED key for at least 3 second without releasing your finger until the buzzer emits 2 short tones.

4. **Release the FEED key once the buzzer emits 2 short tones.**

   All jobs have been cleared.

10. Cutter lock release mode

The blade of the cutter may sometimes be left exposed due to reasons such as a paper jam.

If the issue is not resolved even after removing the jammed media and turning off and restarting the power, follow the steps below to enable the cutter lock release mode.

1. **Remove the jammed media.**

2. **While pressing the cover open buttons (left and right), open the top cover.**

3. **Check that the printer is online and not receiving data.**

4. **Continue to press and hold the FEED key until the cut operation is performed.**

   When the FEED key is pressed and held for at least 3 seconds, the printer will switch to online configuration mode, the buzzer will emit 3 short tones, and the status LED will flash alternately in green and red.

   During this process, be careful not to release the FEED key.

   Press and hold the FEED key for at least another 5 seconds so that the buzzer emits 4 tones and the cut operation is performed once.

   This function is enabled for only the integrated cutter.

11. Maintenance

Perform printer maintenance on a regular basis to ensure that the printer is always in good working condition.

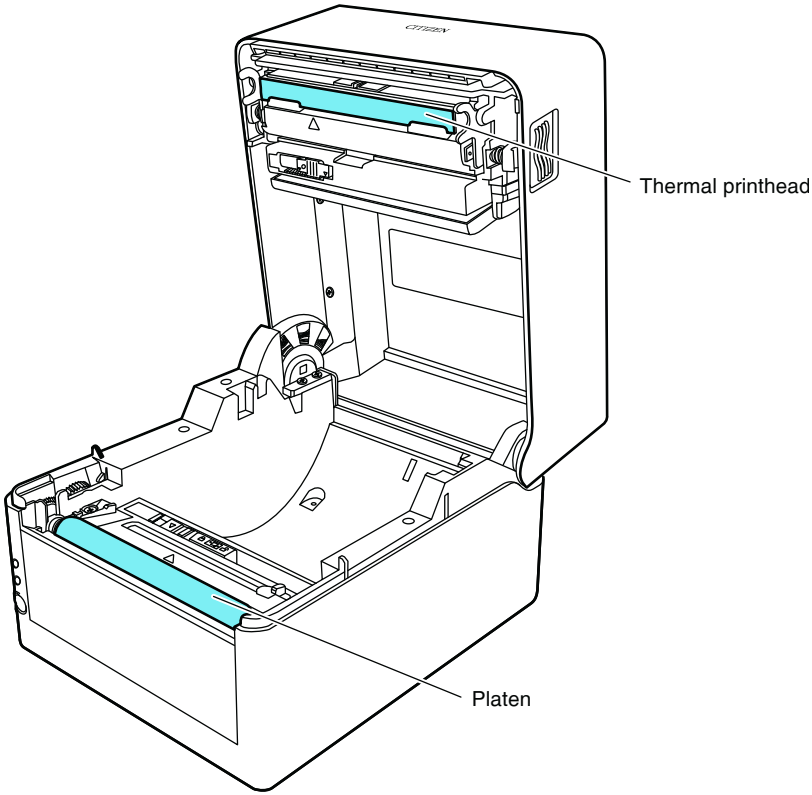

CAUTION

Excluding ethyl alcohol, do not use solvents such as benzene, acetone, thinner, or others to clean the printer. Doing so may cause the printer surface or other parts to deform.

11.1 Plastic Surface of Printer and Platen

- **Use a soft cloth or cotton swab dipped with a small amount of ethyl alcohol to wipe off dust and dirt.**

Notes
Using an excessive amount of ethyl alcohol to clean the platen may cause surface deformation, which would result in unstable feed operation.

11.2 Thermal head

- **Use a cotton swab dipped with a small amount of ethyl alcohol.**

CAUTION
■ The thermal head is hot immediately after printing. Do not touch the thermal head at this time. ■ Do not touch the thermal head with bare hands or do not allow metals to come into contact with the thermal head.

11.3 Peeler

Peeled label detection sensor

- Use a soft cloth or cotton swab to wipe off dust and dirt.

Peeler roller

- Use a soft cloth or cotton swab dipped with a small amount of ethyl alcohol to wipe off dust and dirt.

CAUTION
You may get injured by the peeling plate during cleaning. Take sufficient care.

12. Appendices

12.1 Error/Alarm Indications

The status LED and buzzer are used to confirm error status when errors occur in the printer.

Status LED	Buzzer	Error	Error description (in bold) and resolution
Flashes in red	2 short tones	Head Up Error	**Top cover is not closed correctly.** • Close the top cover correctly.
Flashes in red	3 short tones	End of Media Error	**Printer has run out of media.** **Media is not set correctly.** • Open the top cover and load media or set the media correctly.
Flashes in red	4 short tones	Media Load Error Media Jam Error	**Label gaps or black lines cannot be detected.** • Check the media sensor positions. • Readjust the media sensors. • Make sure the selection of the label detection sensor (transparent sensor), the black mark detection sensor (reflective sensor), or the continuous media detection sensor (reflective sensor) matches the type of media used. **Media cannot be transported.** • Open the top cover, remove any media blocking transport, and set the media again.
Flashes in red	6 short tones	Cutter Error (models with cutters)	**Cutter is not operating.** • Open the top cover and remove any media or other object blocking cutter operation. • If the cutter does not operate after removing foreign objects, the cutter may not be connected or installed correctly or may have failed. Contact your retailer. **Home position cannot be detected.** • The auto cutter may have failed. Contact your retailer.
		Peeler Error (models with peeler)	**The peeler cannot be recognized.** • Turn the power to the printer off and on again. • If the peeler does not operate after turning the power off and on again, it may not be correctly connected or installed, or there may be a breakdown. Contact your retailer.

Status LED	Buzzer	Error	Error description (in bold) and resolution
Flashes in amber	Repetitions of long tones	Head Low Temperature Error	**The thermal head is at a low temperature (approximately -10°C).** • Use the printer in proper environments of at least 0°C. **The thermal head is not connected.** • Check the cable connection with the thermal head.
Flashes alternately in red and green	Repetitions of long tones	RS-232C Communication Error	**Parity error** **Framing error** **Receive buffer is full** **Transmission buffer is full** • Check the communication settings.
Flashes alternately in red and amber	Repetitions of long tones	Hardware Error	**A hardware error has been detected.** • Immediately turn off the power to the printer and contact your retailer.
Flashes in amber	None	Head High Temperature Alarm Motor High Temperature Alarm	**The thermal head or feed motor is at a high temperature.** • Printing stops if the thermal head reaches approximately 70°C or more while printing. Printing resumes automatically once the temperature falls to approximately 60°C or lower. • Printing stops if the feed motor reaches approximately 95°C or more while operating. Printing resumes automatically once the temperature falls to approximately 85°C or lower.
Flashes in red	None	Head Check Alarm	**The heater element resistance value of the thermal head is abnormal.** **A thermal head with a number of heater elements differing from the specifications is installed.** • Press the FEED key once to cancel this alarm. • We recommend contacting your retailer and requesting replacement of the thermal head. * The CL-E300/CL-E303 does not have a broken head element check function so if there are vertical white lines that you suspect are caused by a broken head element, clean the thermal head and then perform a print check in the test print mode. If the white line problem is not resolved, the head element may be broken.

12.2 Emulation Auto Detect setting

If a control language different from the emulation when operating with the Emulation Auto Detect setting in System Setup set to "On" or "Full Auto" is received, the emulation is automatically switched. (Note that the Eltron language will not be detected.)

When the Emulation Auto Detect setting is set to "Full Auto"

When a different control language is detected, operation is continued with the emulation of the received control language. The new emulation setting will be saved, but the printer will not automatically restart. If the printer is manually restarted later on, it will start up with the newly saved emulation setting.

When the Emulation Auto Detect setting is set to "On"

(1) When an emulation command different from the printer settings is received, the buzzer emits one short tone and the status LED flashes alternately in green and orange.

(2) If the FEED key is pressed and held for at least 3 seconds, the buzzer emits one long tone, and the emulation switches to that compatible with the command sent when the FEED key is released.

(3) If the FEED key is not released in step (2) but is pressed and held for at least 3 more seconds, the buzzer emits four short tones, and the emulation does not switch when the FEED key is released but instead returns to the online state.

12.3 Troubleshooting

This section explains the corrective action to take when trouble occurs with the printer or an error message is displayed.

- Items to check when a malfunction occurs

When the printer malfunctions during operation, take corrective action with reference to the following table.

If the corrective action does not solve the problem, consult with the service personnel at the dealer where you purchased the printer.

Indication	Check	Corrective action
The LED do not light up when printer power is connected.	Is the plug of the power cord correctly inserted into the electric outlet?	Insert the plug of the power cord correctly in the electric outlet.
	Is the connector of the power cord correctly inserted into the power inlet of the printer?	Insert the connector of the power cord correctly into the power inlet of the printer.
	Is the power cord damaged?	Replace the power cord. Consult with the dealer where the printer was purchased to make sure you obtain a cord made especially for the printer. Note: Do not use any power cord except one made especially for the printer.
	Is power supplied to the electric outlet the printer is connected to?	Check to make sure power is supplied to the outlet. If there are any problems, make sure power is supplied to the building. Or find out if a power failure has occurred.
	Is the main fuse in the building's fuse box burnt out?	If necessary, replace the main fuse in the building's fuse box, and reset the main breaker. Ask a qualified serviceman to carry out the replacement.

Refer to 3.4 Connecting the AC Adapter

Indication	Check	Corrective action
Paper is feeding, but nothing is printed.	Is the thermal printhead dirty? Is a label stuck to the head?	If it is dirty, remove the dirt with the attached head cleaner (Sold separately). If a label is stuck to the thermal printhead remove it. Note: Do not use a metal object to remove a label stuck to the inside of the printer. (This may damage the thermal printhead.) If adhesive label material is stuck to the thermal printhead, remove it with a soft cloth soaked in ethyl alcohol.

Refer to 11. Maintenance

Indication	Check	Corrective action
The printer is not printing neatly.	Are the media correctly set?	Correctly set the media.
	Is the printing density too high or too low?	Set the appropriate printing density using the menu or control software.
	Is the platen dirty? Is it deformed?	If it is dirty, clean it with ethyl alcohol. If it is deformed, replace it. Note: Consult with the dealer that supplied the printer concerning the replacement.
	Is the thermal printhead dirty? Is a label stuck to the head?	If it is dirty, remove the dirt with the attached head cleaner (Sold separately). If a label is stuck to the thermal printhead remove it. Note: Do not use a metal object to remove a label stuck to the inside of the printer. (This may damage the thermal printhead.) If adhesive label material is stuck to the thermal printhead, remove it with a soft cloth soaked in ethyl alcohol.
	Is the printer's head pressure balance correct for the width of the media that is used?	Use the slider to adjust the head pressure of the thermal print head.

Refer to 3.2 Loading Paper

Refer to 4.1 List of Settings

Refer to 11. Maintenance

Indication	Check	Corrective action
The printing position changes.	Are the media correctly set?	Correctly set the media.
	Is the platen dirty? Is it deformed?	If it is dirty, clean it with ethyl alcohol. If it is deformed, replace it. Note: Consult with the dealer that supplied the printer concerning the replacement.
	Are the data contents and the command signals from the host appropriate?	If an error message is displayed, check the content of the software and the communication status set by the host computer.
	Are the menu values set appropriately?	Set the correct menu values using the operating panel or the host computer.
	Are the sensitivities of the media sensors appropriate for the media that is used?	Set the media sensitivity to appropriate values. If this does not solve the problem, change the “Sensor level” that is set in the “System setup.”

Refer to 2.2 Operation panel

Refer to 3.2 Loading Paper

Refer to 4.1 List of Settings

Refer to 11. Maintenance

Indication	Check	Corrective action
A cutter error occurs.	Is there any jammed media?	If the issue is not resolved even after removing the jammed media and turning off and restarting the power, enable the cutter lock release mode and release the cutter lock.

Refer to 10. Cutter lock release mode

12.4 Basic Specifications

Printing

Item	Description	
Print method	Direct thermal	
Resolution	CL-E300/CL-E300EX/CL-H300SV	Main scanning line density: 203 dots/inch (8 dots/mm)
		Sub-scanning line density: 203 dots/inch (8 dots/mm)
		Head dots: 864 dots (effective dots: 832)
	CL-E303/CL-E303EX	Main scanning line density: 300 dots/inch (11.8 dots/mm)
		Sub-scanning line density: 300 dots/inch (11.8 dots/mm)
		Head dots: 1248 dots (effective dots: 1240)
Max. print width	CL-E300/CL-E300EX/CL-H300SV	104 mm / 4.1 inch
	CL-E303/CL-E303EX	105 mm / 4.1 inch
Max. print length	CL-E300/CL-E300EX/CL-H300SV	(Datamax) 2539.7 mm/99.99 inch (Zebra) 2540.0 mm/100.00 inch
	CL-E303/CL-E303EX	1,270.0 mm / 50.00 inch
Print density	Print density is adjustable with software	

Print speed

Item	Description	
Print speed setting	CL-E300/CL-E300EX/CL-H300SV	2 to 8 inch per second in 1-inch increments (7 to 8 inch per second possible at normal temperature using a print density of 10 and the recommended direct thermal media)
	CL-E303/CL-E303EX	2 to 6 inch per second in 1-inch increments
	Peeler model	2 to 4 inch per econd in 1-inch increments

Print mode

Item	Description
Batch mode	Normal printing (single or multiple sheets)
Tear off mode	Back-feeds to the tear-off position after printing is complete. (Labels may peel when roll media is back-fed.)
Cut mode	Prints while cutting after every specified number of sheets/labels. Two types of cut mode operations are available. • Back-feed • Cut-through (Cut-through pauses printing to cut the previous label when it reaches the cut position. Printing resumes after the cut operation, but a gap may be formed at the location where printing was paused.)
Peeling mode	The label is peeled from the backing paper after label printing.

Media

Item	Description	
Media types	Roll, fanfold media (Continuous label media, die-cut media, continuous tag media, and continuous ticket media)	
Roll media orientation	Outer surface	
Recommended media	Label media (Ricoh 150LA-1), tag media (Ricoh 130LHB)	
Max. media width	118.0 mm / 4.65 inch	
Min. media width	25.4 mm / 1.00 inch	
Min. label width	21.5 mm / 0.85 inch	
Min. label pitch*1	8.89 mm / 0.35 inch*2 (Peeler model : 27.94 mm / 1.10 inch)	
Max. label pitch	CL-E300/CL-E300EX/CL-H300SV	(Datamax) 2539.7mm/99.99inch (Zebra) 2540.0mm/100.00inch (Peeler model: 122.54 mm / 4.82 inch)
	CL-E303/CL-E303EX	1,270.0 mm / 50.00 inch (Peeler model: 122.54 mm / 4.82 inch)
Max. media thickness	standard model	0.19 mm / 0.0075 inch
	integrated cutter model	
	separable cutter model	0.15 mm / 0.0059 inch
	Peeler model	0.17 mm / 0.0067 inch
Max. media length	CL-E300/CL-E300EX/CL-H300SV	Standard model and cutter model: (Datamax) 2539.7mm/99.99inch (Zebra) 2540.0mm/100.00inch Peeler model (max. label length): 120 mm / 4.72 inches
	CL-E303/CL-E303EX	Standard model and cutter:model: 1,270.0 mm / 50.00 inch Peeler model (max. label length): 120 mm / 4.72 inches
Min. media length*1	6.35 mm / 0.25 inch*2 (Peeler model : 25.40 mm / 1.00 inch)	
Min. media thickness	0.0635 mm / 0.0025 inch	
Loaded roll diameter	Max. external diameter: 127 mm / 5 inch	
	Media core: 25.4 or 38.1 mm / 1 or 1.5 inch (Peeler model: 38.1 mm / 1.5 inches)	

*1 To use media with a pitch of less than 1 inch, enable the [Small Media Adjustment] setting.

*2 For models with a cutter, the cutter operation will not be performed if the media length is less than 25.4 mm (1 inch).

Barcodes

Item	Description	
Datamax® emulation	One-dimensional	•Code 3 of 9 •UPC-A •UPC-E •EAN-13 (JAN-13) •EAN-8 (JAN-8) •Interleaved 2 of 5 •Code 128 •HIBC (Code 3 of 9 using Modulus 43) •Codabar (NW-7) •Int 2 of 5 (Interleaved 2 of 5 using Modulus 10) •Plessey •Case Code •UPC2DIG Add •UPC5DIG Add •Code 93 •Telepen •ZIP •UCC/EAN128 •UCC/EAN128(for K-MART) •UCC/EAN128 Random Weight •FIM
	Two-dimensional	•Maxi Code •PDF-417 •Data Matrix •QR Code •Aztec •GS1 Databar Omnidirectional (RSS-14) •GS1 Databar Truncated (RSS-14 Truncated) •GS1 Databar Stacked (RSS-14 Stacked) •GS1 Databar Stacked Omnidirectional (RSS-14 Stacked Omnidirectional) •GS1 Databar Limited (RSS Limited) •GS1 Databar Expanded (RSS Expanded)
Zebra® emulation	One-dimensional	•Code 11 •Interleaved 2 of 5 •Code 39 •EAN-8 •UPC-E •Code93 •Code128 •EAN-13 •Industrial 2 of 5 •Standard 2 of 5 •ANSI CODABAR •LOGMARS •MSI •Plessey •UPC/EAN Extensions •UPC-A •POSTNET •Planet
	Two-dimensional	•Code49 •PDF-417 •CODA BLOCK •Maxi Code •Micro PDF-417 •Data Matrix •QR Code •TLC39 •Aztec •GS1 Databar Omnidirectional (RSS-14) •GS1 Databar Truncated (RSS-14 Truncated) •GS1 Databar Stacked (RSS-14 Stacked) •GS1 Databar Stacked Omnidirectional (RSS-14 Stacked Omnidirectional) •GS1 Databar Limited (RSS Limited) •GS1 Databar Expanded (RSS Expanded)
Eltron® emulation	One-dimensional	•Code39 •Code93 •Code128 •Codabar •EAN-8 •EAN-13 •German Postal Code•Interleaved2of5 •POSTNET •Planet •Japanese Postnet •UCC/EAN-128 •UPC-A •UPC-E •UPC-Interleaved2of5 •Plessey(MSI-1) •MSI-3
	Two-dimensional	•Aztec •Data Matrix •MaxiCode •PDF-417 •QR Code •GS1 Databar Omnidirectional (RSS-14) •GS1 Databar Limited (RSS Limited) •GS1 Databar Stacked (RSS-14 Stacked) •GS1 Databar Truncated (RSS-14 Truncated)

Fonts

Item	Description
Datamax® emulation	(1) 7 types of fixed-pitch fonts (2) OCR fonts OCR-A*1 and OCR-B*1 (3) Proportional fonts CG Triumvirate smooth font CG Triumvirate bold smooth font CL-E300/CL-E300EX/CL-H300SV: 6, 8, 10, 12, 14, 18, 24, 30, 36, and 48 points CL-E303/CL-E303EX: 4, 5, 6, 8, 10, 12, 14, 18, 24, 30, 36, and 48 points Character sets: Compliant with code page 850 (4) TrueType™ rasterizer (5) Kanji fonts (Gothic) JIS 1st level Kanji, JIS 2nd level Kanji, Special symbol, Extended Kanji 16 dot, 24 dot, 32 dot, 48 dot
Zebra® emulation	(1) 5 types of fixed-pitch fonts (2) OCR fonts OCR-A*1 and OCR-B*1 (3) Proportional fonts CG Triumvirate Condensed Bold (4) TrueType™ rasterizer (5) Kanji font (Gothic) JIS 1st level Kanji, JIS 2nd level Kanji, Special symbol, Extended Kanji 24 dot
Eltron® emulation	(1) 5 types of fixed-pitch fonts (2) 2 types of fixed-pitch fonts

*1 Depending on the reader, OCR font recognition may be poor.

Symbol Sets*1

Item	Description
Single-Byte sets (Datamax® , Zebra® Emulation)	•PC866U Ukrainian*2 •PC Cyrillic •ISO 60 Danish/Norwegian •Desk Top •ISO 8859/1 Latin 1 •ISO 8859/2 Latin 2 •ISO 8859/9 Latin 5 •ISO 8859/10 Latin 6 •ISO 8859/7 Latin/Greek •ISO 8859/15 Latin 9 •ISO 8859/5 Latin/Cyrillic •ISO 69: French •ISO 21: German •ISO 15: Italian •Legal, Math-8 •Macintosh •Math •PC-858 Multilingual •Microsoft Publishing •PC-8 •PC-437 USA •PC-8 D/N •PC-437N •PC-852 Latin/Greek •PC-862 Latin/Hebrew •Pi Font •PC-850 Multilingual •PC-864 •Latin/Arabic •PC-8 TK •PC-437T •PC-1004 •PC-775 Baltic•Non-UGL •Generic Pi Font •Roman-8 •Roman-9 •ISO 17: Spanish •ISO 11: Swedish •Symbol •PS Text •ISO 4: United Kingdom •ISO 6: ASCII •Ventura International •Ventura Math •Ventura US•Windows 3.1 Latin 1 •Wingdings •Windows 3.1 Latin 2 •Windows 3.1 Baltic (Latv, Lith) •Windows 3.0 Latin 1 •Windows Latin/Cyrillic •Windows 3.1 Latin 5
Double-byte sets (Datamax® Emulation)	•EUC •JIS •Shift JIS •Unicode •KS Code •GB Code

*1 Use it when drawing a TrueType font. Eltron® Emulation does not support a TrueType font.

*2 “PC866U Ukraina” is supported only in Datamax® emulation.

Control Languages

Supports the Datamax® language, Zebra® language and Eltron® language

Digital Processing Components

Item	Description
CPU	32-bit RISC CPU (max. operation frequency of 216 MHz)
ROM	16 MBytes of flash ROM (user area: 4 MBytes)
RAM	32 MBytes of SDRAM (user area: 4 MBytes)

Media detection sensors

Item	Description
Transmissive sensor	Detects label gaps, tag notches, and out of media state
Reflective sensor	Detects black lines on back of media and out of media state
Peeled label detection sensor	Detects peeled label (peeler model only)

Communication interfaces

- CL-E300/CL-E303

Item	Description
Serial	RS-232C, 9-pin D-SUB female connector Baud rates: 2400, 4800, 9600, 19200, 38400, 57600, and 115200 bps
USB	Full-speed USB 2.0 (12 Mbps), Type B connector
Ethernet	10BASE-T / 100BASE-TX, RJ45 connector

- CL-E300EX/CL-E303EX/CL-H300SV

Item		Description
integrated	USB	Full-speed USB 2.0 (12 Mbps)

Item		Description
Optional interface	Serial	RS-232C, 9-pin D-SUB male connector Baud rates: 2400, 4800, 9600, 19200, 38400, 57600, and 115200 bps
	Bluetooth	(Bluetooth3.0)+Full-speed USB 2.0 (12 Mbps)
	Wired LAN	10BASE-T / 100BASE-TX, RJ45 connector
	Wireless LAN	(IEEE802.11a/b/g/n)+Ethernet (10BASE-T / 100BASE-TX)
	USB host+Wired/Wireless LAN	Full-speed USB 2.0 (12 Mbps)×2+Ethernet (10BASE-T / 100BASE-TX)

Indicators and switches

Item	Description
LED	Power on (green), status/errors/alarms (green, red, and amber)
Buzzer	Alarms, warnings, and other indications
Operation keys	1 (Performs feed and other operations)
Panel button	CL-E300/CL-E303: Prints and initializes the wired LAN settings CL-E300EX/CL-E303EX/CL-H300SV: Prints and initializes the expansion interface board settings
Head-up detection switch	Detects head-up states
Power switch	Turning the Power On/Off

Power supply

AC adapter (DOE Level VI-compliant)

Input: 100 to 240 VAC, 50/60 Hz

Output: 24 VDC, 2.5 A

Dedicated USB power supply port (CL-E300EX/CL-E303EX/CL-H300SV)

Output: 5 VDC, (Max.) 2.1 A

Supported Standards

- VCCI: CISPR32: 2016 Class B
- UL: 60950-1st, 2nd Edition
- CSA C22.2 No.60950-1-07、2nd Edtion
- FCC: 47 CFR Part 15, Subpart B, Class B
- IC: ICES-003
- EN: 62368-1 : 2014 / A11 : 2017
- EN: 55032 : 2015 classB
- EN: 55035:2017
- EN: 61000-3-2:2014
- EN: 61000-3-3:2013
- EN301 489-17 V3.1.1 (Wireless Lan/Bluetooth Interface option card model only)
- EN301 489-1 V2.1.1 (Wireless Lan/Bluetooth Interface option card model only)

- EU: EN50581 : 2012 (RoHS)
- Energy Star : Energy Equipment、Version 3.0
- CCC: GB4943.1-2011, GB/T9254-2008, and GB17625.1-2012
- BIS (India)* / KC (Korea)* / UL CoC (Mexico) / S-mark SIN (AC Adapter) / RCM (Australia) / EAC (EAEU)

  * Only applies for some models. Please inquire in advance.

Reliability

Item	Description
Head	When the recommended paper is used under our given printing conditions: Wear resistance 50 km (damage due to foreign matter being caught in the head is not applicable)
Platen	Platen 100 km (replacement recommended after 5 to 10 km in the peeler model only)
Auto cutter	Integrated type: Min. 300,000 cuts (60 µm ≤ paper thickness < 150 µm) Min. 100,000 cuts (150 µm ≤ paper thickness ≤ 190 µm) Interchangeable type: Min. 300,000 cuts (60 µm ≤ paper thickness < 85 µm, paper width ≤ 4 inches) Min. 200,000 cuts (85 µm ≤ paper thickness ≤ 150 µm, paper width ≤ 4 inches) Min. 150,000 cuts (85 µm ≤ paper thickness ≤ 150 µm, paper width ≤ 2 inches)

Environmental conditions

Refer to 12.5 Usage Conditions

Refer to 12.6 Storage Conditions

Electrostatic Voltage

EN61000-4-2:2009-compliant

AC Power Consumption

Item	Description
CL-E300	100 V/50 Hz: 1.5 W standby, 66 W during operation (USB, print speed of 8 IPS, print density of 10, printing rate of 12.5 %) 220 V/50 Hz: 1.7 W standby, 64 W during operation (USB, print speed of 8 IPS, print density of 10, printing rate of 12.5 %)

Item	Description
CL-E303	100 V/50 Hz: 1.7 W standby, 60 W during operation (USB, print speed of 6 IPS, print density of 10, printing rate of 12.5 %) 220 V/50 Hz: 1.7 W standby, 58 W during operation (USB, print speed of 6 IPS, print density of 10, printing rate of 12.5 %)
CL-E300EX/CL-H300SV	100 V/50 Hz: 1.5 W standby, 73 W during operation (USB, print speed of 8 IPS, print density of 10, printing rate of 12.5 %) 220 V/50 Hz: 1.7 W standby, 65 W during operation (USB, print speed of 8 IPS, print density of 10, printing rate of 12.5 %)
CL-E303EX	100 V/50 Hz: 1.7 W standby, 62 W during operation (USB, print speed of 6 IPS, print density of 10, printing rate of 12.5 %) 220 V/50 Hz: 1.7 W standby, 58 W during operation (USB, print speed of 6 IPS, print density of 10, printing rate of 12.5 %)

External Dimensions

Refer to External Dimensions*1

Weight

- Standard model and optional interface model: 2.0 kg
- Standard model and optional interface model (with AC adapter storage case): 2.7 kg
- Integrated cutter model: 2.3 kg
- Separable cutter model: 2.2 kg
- Peeler model: 2.2 kg

Accessories

- AC adapter
- AC cord
- Media shaft
- Media shaft guide
- USB cable
- Quick Start Guide*/Safety Instructions

* You can download the driver, SDK, utility and BarTender (label creation software) from the URL listed in the Quick Start Guide.

Factory Options (the default setting)

- Cutter (integrated or interchangeable)
- AC adapter case
- Optional interface
- Peeler

External Dimensions*1

Standard model

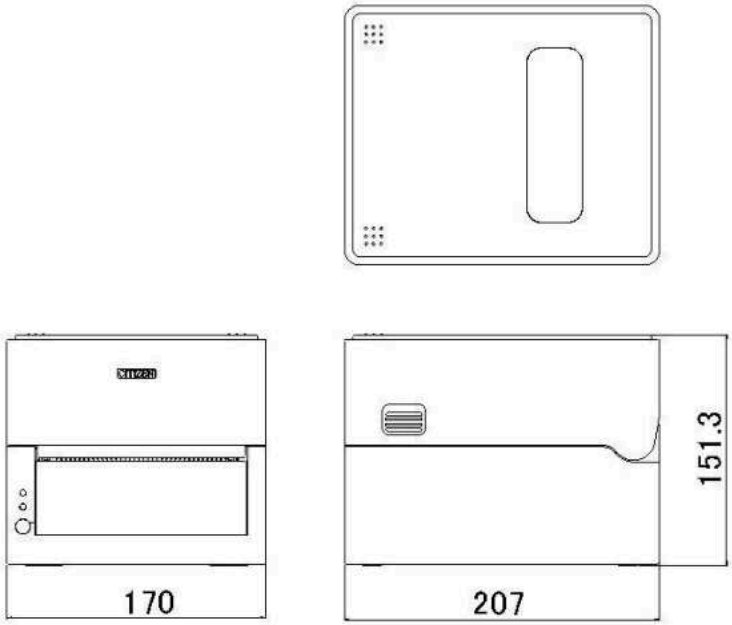

Model with AC adapter storage case

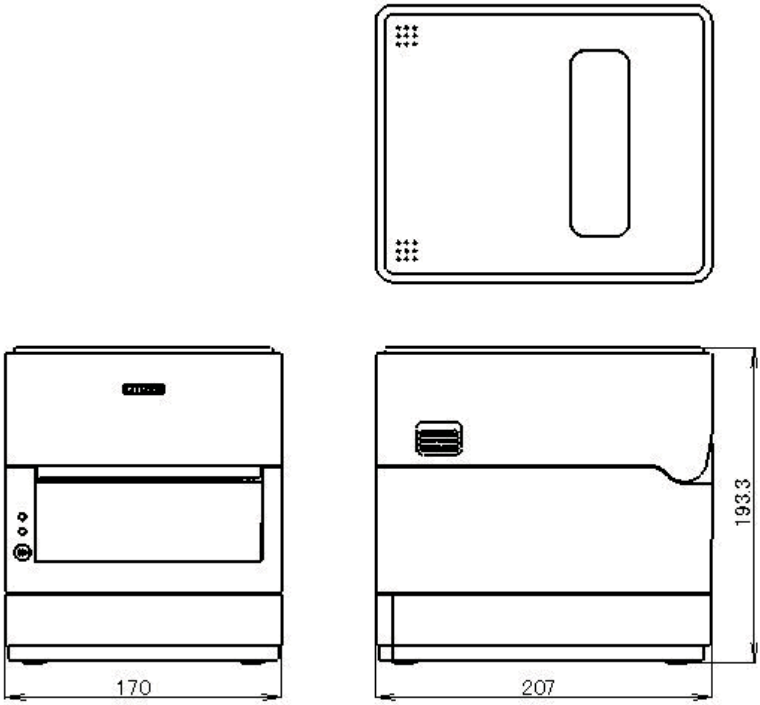

Integrated cutter model

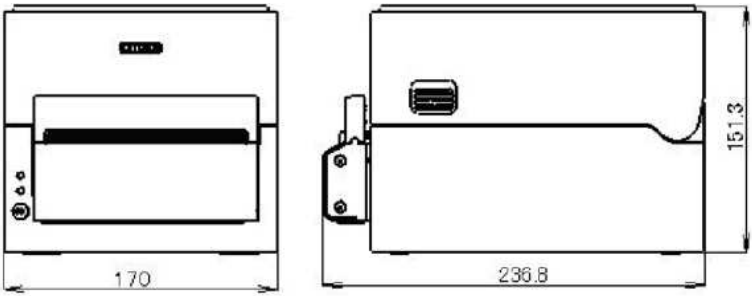

Separable cutter model

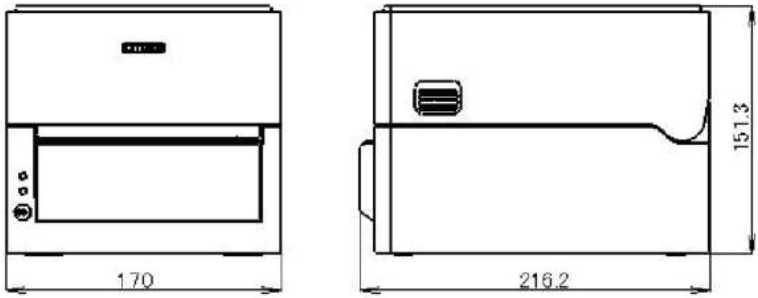

Optional interface model

Increase in size due to expansion interface board: Max. 20 mm

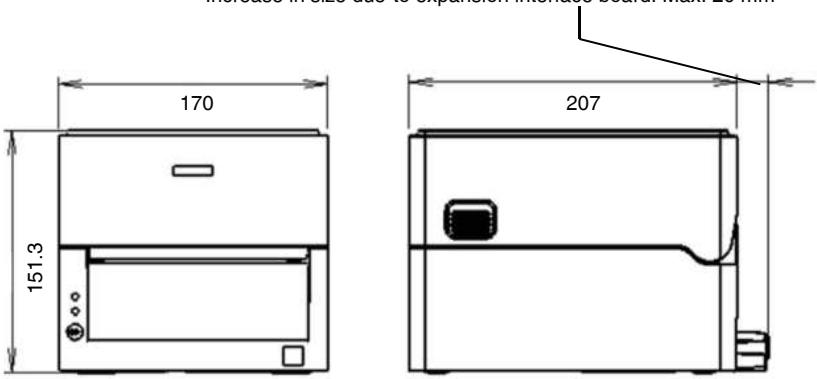

Peeler model

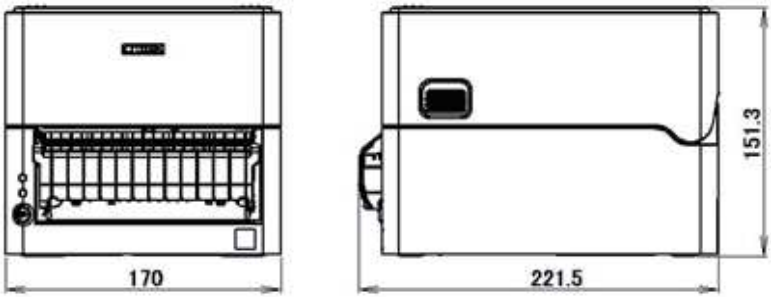

*1 Dimensions are design values. Actual dimensions may vary due to variance in manufacturing processes.

12.5 Usage Conditions

(1) Safe operating temperature: 0 to 40°C

(2) Safe printing temperature: 5 to 35°C

(3) Humidity: 30 to 80% RH (no condensation)

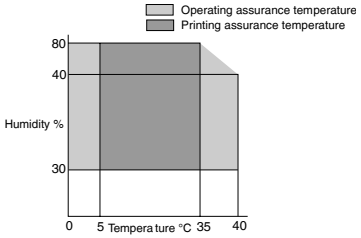

Conditions assuring operation and printing

12.6 Storage Conditions

(1) Temperature: -20 to 60°C (excluding record sheet)

(2) Humidity: 5 to 85% RH (excluding record sheet, no condensation)

* However, for storage at high temperature and humid environments, the combination of 40°C and 85% RH (no condensation) is taken as the worst value.

12.7 Interfaces

Serial Interface (CL-E300/CL-E303)

Interface Specifications

Transfer method	Start-stop synchronization method, full-duplex communication
Signal level	RS-232C
Baud rates	2400, 4800, 9600, 19200, 38400, 57600, and 115200 bps
Data length	7 bits or 8 bits
Stop bits	1 bits or 2 bits
Parity	Even, odd, or none

Interface	9-pin D-SUB female connector (CL-E300/CL-E303) 9-pin D-SUB male connector (CL-E300EX/CL-E303EX/CL-H300SV)

- CL-E300/CL-E303 female connector

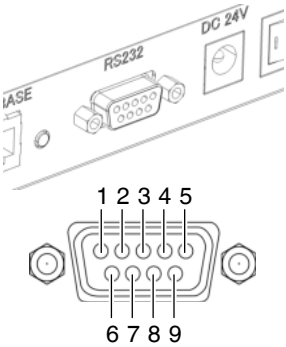

- CL-E300EX/CL-E303EX/CL-H300SV male connector

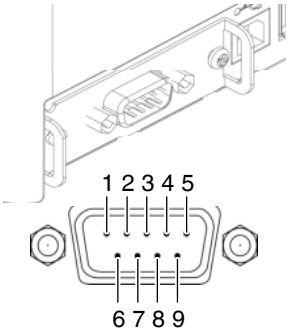

Signal Line/Pin Assignment

Signal code	Signal	Pin No.	Function
INIT	Reset	1	Reset printer signal line
RXD	Receive data	2	Signal line used by printer to receive data from external devices
TXD	Transmit data	3	Signal line used by printer to send data to external devices
DTR	Data terminal ready	4	Signal line used by printer to notify external devices that printer is ready to communicate
SGND	Signal line ground	5	Signal line ground reference
DSR	Data set ready	6	Signal line used by external devices to notify printer that they are ready to communicate
RTS	Request to send	7	Signal line used by printer to notify external devices that the printer is read to receive data
CTS	Clear to send	8	Signal line used by external devices to notify printer that they are ready to receive data
VCC	+5 V	9	(Factory use only)

XON / XOFF Protocol

a. Conditions for XON code output

- Communication is possible after the power is turned on.
- Scenario in which the receive buffer has less than 128 bytes available causing output of the XOFF code followed by the receive buffer then having at least 1,024 bytes available.

b. Conditions for XOFF code output

- Scenario in which the receive buffer has less than 128 bytes available.

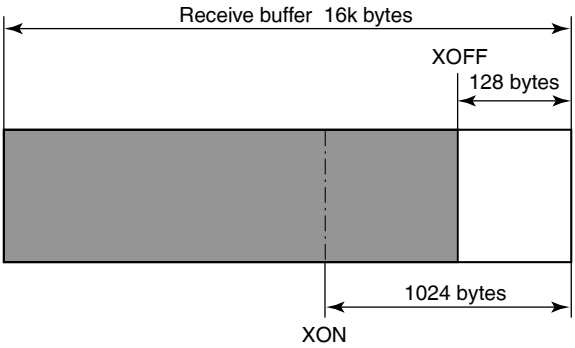

DTR Protocol

a. Conditions when DTR signal state changes to Ready (High)

Scenario in which the receive buffer has at least 128 bytes available.

Note that once the receive buffer has less than 1,024 bytes available causing the DTR signal to change to the Busy (Low) state, the DTR signal state remains in the Busy (Low) state until the receive buffer has at least 1,024 bytes available.

b. Conditions when DTR signal state changes to Busy (Low)

Scenario in which the receive buffer has less than 128 bytes available.

USB Interface

Specifications

Standard	Compliant with Universal Serial Bus Specification 2.0
Transmission speed	Supports Full-speed 12 Mbps transfer
Receive buffer	16 kB receive buffer
Connector	USB Type B connector

Signal Line/Pin Assignment

Signal code	Signal	Pin No.	Function
VBUS	USB power	1	USB power (+5 V)

Signal code	Signal	Pin No.	Function
D-	Negative signal line	2	Negative signal line
D+	Positive signal line	3	Positive signal line
GND	GND	4	GND

Bluetooth interface (CL-E300EX/CL-E303EX/CL-H300SV)

Specifications

Version	Bluetooth 3.0 + EDR
Profile	Serial Port Profile (SPP) iPod Accessory Protocol (iAP)
Power class	Class 2 (10 m line of sight)
Frequency band	2.400 to 2.483 GHz
Electrical specifications	Approx. 3 mA (average 27 mA during communication, maximum 70 mA)
Device name	“CL-E300_XX”, “CL-E303_XX”, "CL-H300SV_XX" (XX is the last two digits of the Bluetooth device address, default setting)

Names of parts

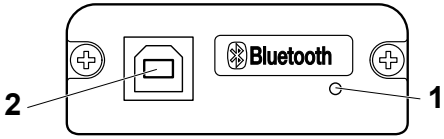

1: Status LED

The Bluetooth communication/connection/error status is indicated by this LED.

2: USB connector

Data can be exchanged by USB communication.

Notes

When using this interface board as a USB interface, do not connect USB cables to both the main unit side and interface board side.

If USB cables are connected to both, priority will be given to communication of the one connected to the connector on the main unit side.

Bluetooth status LED

Status	Description	Status LED (green)
Detection standby	Standing by for detection and connection	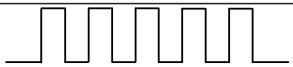
Connection standby	Standing by for connection	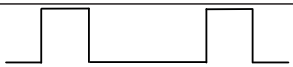

Status	Description	Status LED (green)
iAP connection	Data session unopened	
Ready to communicate	(SPP/iAP) data transfer is possible	
Error	Error or settings being configured	Unlit

Pairing operation

You need to perform the operations below the first time you establish a Bluetooth connection for Bluetooth data communication.

1. Detect Bluetooth devices
2. Configure pairing settings

1: **Detecting Bluetooth devices**

Confirm that Bluetooth is enabled on the host PC before searching for Bluetooth devices.

This product will be indicated as “CL-E300_XX” or “CL-E303_XX” or "CL-H300SV_XX" (XX is the last 2 digits of the unique Bluetooth device address) when detected in the device search.

Select this product from among the detected devices.

2: **Configuring pairing settings**

Normally, selecting the printer during device detection will transition directly to pairing settings.

Notes
Some host PC configurations and models may not transition directly to pairing settings after the printer is selected during device detection.

Functions

1: Communication status display by LED

2: Security settings available (authentication, encryption, and device search restriction)

This product is provided with the two security levels of high and medium.

The difference between the security levels is whether or not there are authentication requests and encryption requests.

An authentication request is required when starting a service search or iAP/SPP connection, and there is the following relationship for the authentication and en-

cryption requests of the two security levels, including whether or not there is support for SSP on the device.

- Device without support for SSP

Security setting	Service search authentication request	PIN code connection authentication	SPP connection authentication request	Encryption request
Medium	No	Yes	Yes	Yes
High	Yes	Yes	Yes	Yes

- Device with support for SSP

Security setting	Service search authentication request	PIN code connection authentication	SPP connection authentication request	Encryption request
Medium	No	No	Yes	Yes
High	Yes	No	Yes	Yes

3: Pairing information retention function (maximum 8; most recent 8 if 8 is exceeded)

4: Connection approval by means of secure simple pairing (SSP) or a PIN code

The initial value of the PIN code is the last 4 digits of the 12-digit address (excluding the colon ":") that is printed by a self test print, and if the PIN code contains any alphabet letters (A to F), specify them in uppercase.

(Example: When 01:23:45:67:89:AB, the initial PIN code is 89AB.)

For a host with the SSP function, pairing is achieved without any additional operation.

For a host without the SSP function, you will be asked for a PIN code so enter the PIN code.

5: Connection update function

Executing "Bluetooth connection update mode" in the online configuration mode transitions to the discoverable state.

Also, executing "All Bluetooth pairing information deletion mode" in the same configuration mode deletes the saved pairing information and transitions to a discoverable state.

If the paring information on the host is deleted, the device may not be displayed when you perform a device search again unless you also delete the pairing information on the printer.

If that happens, delete the pairing information with the connection update switch to transition to the discoverable state.

6: Auto reconnection

With iOS device Bluetooth communication, a connection between a paired iOS device and the printer is not automatically restored after it is lost. However, when auto reconnection is enabled, the printer tries to reconnect with an iOS device after twoway communication is enabled and automatically restores the connection.

Notes

- Even when “No” is indicated for a request, do as requested if there is a request from the connected party.

  Encryption for the security medium setting is enabled only for an authenticated iAP/SPP connection.
- **This function is enabled when shipped from the factory.**

  Auto reconnection can take some time to connect when the host is not an iOS device.
- Even if the partner device is an iOS device, the conditions below can interfere with the auto reconnection function.

  - **When you want Bluetooth communication to cut off after printing is complete**
  - **When there are multiple iOS devices printing on the same printer**

  Under such conditions, disable auto reconnection.

  Since processes such as the initial setup of the Bluetooth module are performed when the power is turned on, startup may take several seconds to complete.

  When large amounts of data will be transferred from a host, perform control such as transfer time and transfer data amount adjustment on the user side so that the transfer data buffers on both the printer and host do not become full.

  For pairing information deletion and reconnecting, refer to the following.

Refer to 8. Online Configuration Mode

Ethernet Interface (CL-E300/CL-E303)

Supported Protocols

Supported Protocols	ARP, IP, and TCP
Transport layer protocols	TCP and UDP
Application layer protocols	DHCP, HTTP, SNMP, and Raw Socket Port

Raw Socket Port

Performs bidirectional communication of print data and printer status.

Port No.	9100 (user-configurable)
Direction of port communication	Bidirectional
Max. socket connections	8
Printable connections	1 (other sockets are reserved)
Timeout	Default: 60 seconds Configurable between 0 and 300 seconds. Value of 0 disables timeouts.

HTTP Server

The Web monitoring function can be used to configure printer and network settings.

Refer to the pages describing the Web monitor for more information.

Refer to 6. Configuring Printer Settings Using LinkServer

Port No.	80
Max. simultaneous connections	4
HTTP version	HTTP/1.1

DHCP

Automatically retrieves IP address information from a DHCP server within 60 seconds after the power is turned on.

If IP address information cannot be retrieved automatically, a fixed IP address (default is 169.254.1.10) is applied.

SNMP Agent

SNMP Version	SNMPv2 (Trap function not supported)
Port No.	161
Supported MIBs	HOST-RESOURCES-MIB and Citizen-MIB (Private)
Community name	public

Connector Connections

Pin No.	Signal	Function
1	TX+	Transmit (positive)
2	TX-	Transmit (negative)
3	RX+	Receive (positive)
4	N.C.	-
5	N.C.	-
6	RX-	Receive (negative)
7	N.C.	-
8	N.C.	-

Compatible connectors

Printer: RJ-45 connector

LED operation

The following table describes port LED operation.

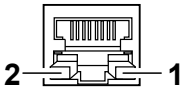

1: Network communication speed indicator

Communication speed	LED (Green)
100 Mbps	On
10 Mbps/disconnected	Flashes

2: Network status indicator

Status	LED (amber)
Connecting	On
Disconnected	Off
Exchanging data	Flashes

Notes

- To check the current Ethernet settings, press the Ethernet panel button located next to the Ethernet interface to printout the settings.
- To initialize Ethernet settings, press and hold the Ethernet panel button for at least 3 seconds. Once the buzzer emits a short tone, press and hold the Ethernet panel button again within 3 seconds for at least 3 seconds.

Wired/wireless LAN interface (CL-E300EX/CL-E303EX/CL-H300SV)

Specifications

Interface main part

Wireless (*1)	Access method	Infrastructure
	Security	WPA2-PSK (encryption: AES, TKIP)
		WPA-PSK (encryption: AES, TKIP)
		WEP (key length: 64-bit/128-bit)
Ethernet	Standard	10BASE-T/100BASE-TX, full duplex/half duplex auto negotiation
	Port	RJ-45
Network	IP version	IPv4
	Protocol	TCP, UDP, HTTP, ICMP, DHCP, SNMP
	Port for printing	RAW (9100 port: user-configurable), LPR
	IP address setting	Manual, DHCP
Hardware	Operation panel	4 LEDs, (2 on panel and 2 on RJ45 connector), 1 button
	USB ports	Connector: USB-A x 0/1/2 USB standard: USB 2.0 High Speed
Software	Setting change procedure	Browser, PC configuration tool, cloud
	Firmware updates	Browser, PC configuration tool, cloud
	Supported platforms	Windows 7, Windows 8, Windows 10, HTML5 browser

USB_Wi-Fi adapter part (*1)

Model number	WU606n	WN-AC433UK

Wi-Fi specifications	Supported standards	IEEE802.11n IEEE802.11g IEEE802.11b	IEEE802.11n IEEE802.11a IEEE802.11g IEEE802.11b
	No. of channels	1 to 13 channels	2.4 GHz band: 1 to 13 channels 5.2 GHz band: 36/40/44/48 channels 5.3 GHz band: 52/56/60/64 channels 5.6 GHz band: 100/104/108/112/116/120/124/128/132/136/140 channels
	Frequency band	2.4 GHz band (2.412 to 2.472 MHz)	2.4 GHz band (2.412 to 2.472 MHz) W52: 5.2 GHz band (5150 to 5250 MHz) W53: 5.3 GHz band (5250 to 5350 MHz) W56: 5.6 GHz band (5470 to 5725 MHz)
	Transmission speed	IEEE802.11n: Max. 150 Mbps IEEE802.11g: Max. 54 Mbps IEEE802.11b: Max. 11 Mbps	IEEE802.11n: Max. 150 Mbps IEEE802.11a: Max. 54 Mbps IEEE802.11g: Max. 54 Mbps IEEE802.11b: Max. 11 Mbps

*1 Only when using wireless LAN

Connecting a USB Device

The function assigned to each USB port differs.

Connect the USB device to be connected to the correct place in reference to the following figure.

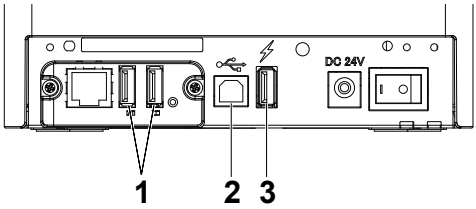

Wired/Wireless LAN
USB host model

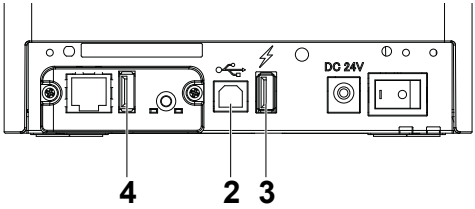

Wireless LAN

1: For peripheral device control or wireless LAN adapter connection

Connects a peripheral device or wireless LAN adapter.

2: For host computer communication

Connect with a host computer.

The printer and host computer will communicate via USB.

3: For supplying power

Connect a mobile device or other USB device.

Power can be supplied to a connected USB device.

* This port does not support USB data communication.

Refer to 3.7 USB Power Supply Port

4: For wireless LAN adapter connection

Connect a wireless LAN adapter.

Panel button operation

Board operations are performed using the panel button on the rear of the LAN board.

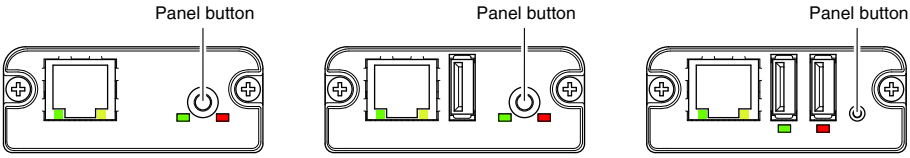

Ethernet

Wireless LAN

Wired/Wireless LAN
USB host model

- Enabling LAN connection

  Turn on the printer. Operation of this board will start about 20 seconds later.

- Printing LAN setup information

  Press the panel button.

- Entering setting mode

  Hold down the panel button. A buzzer will sound once to indicate that setting mode has been entered.

  - You can use setting mode to read factory settings.
  - If no operation is performed for 3 seconds in configuration mode, the mode switches back to normal mode.

- Returning to factory settings

  Enter the board setting mode, and then hold down the panel button. This returns the board to its factory settings.

Notes
The board will automatically restart after this operation is complete. After clearing settings, you will need to re-configure network settings.

LED Functions

The tables below explain how to interpret LED indications.

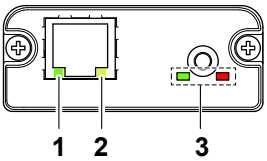

Ethernet

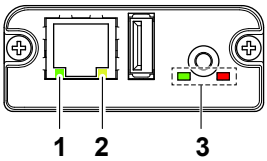

Wireless LAN

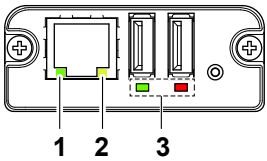

Wired/Wireless LAN
USB host model

1: **Wired LAN transmission speed**

Transmission speed	LED (green)
100 Mbps	Lit
10 Mbps/Not connected	Unlit

2: **Wired LAN connection/transmission status**

Connection status	LED (yellow)
Connected	Lit
Not connected	Unlit
Data transmission in progress	Flashing

3: **Wired/Wireless LAN status**

Connection status	LED (green)	LED (red)	Description
No printer connection	Unlit	-	Board is not connected with a printer.

Connection status		LED (green)	LED (red)	Description
Printer connection	No network connection	Lit	Unlit	Board is connected with a printer.
	Connected by wired LAN	Lit	Flashing (1-second cycle)	Getting an IP address from the DHCP server over wired LAN.
	Wired LAN operation	Lit	Lit	Network operation being performed over wired LAN.
	Connected by wireless LAN *	Flashing (2-second cycle)	Flashing (1-second cycle)	Connecting to an access point or getting an IP address from the DHCP server over wireless LAN.
	Wireless LAN operation *	Flashing (2-second cycle)	Lit	Network operation being performed over wireless LAN.
Resource error		Alternate flashing (1-second cycle)		Board is unable to operate normally.
System error		Alternate flashing (0.2-second cycle)		Board is unable to operate normally.

* Only when using wireless LAN

Web Manager

The interface board has a Web Manager function that can be used to connect to the board with a web browser and change board settings.

Starting up Web Manager

1. Start up a web browser.

2. In the address field, input the board's IP address and then press [Enter].

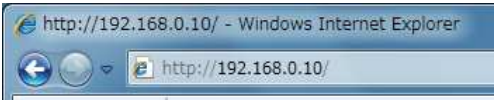

HOME Screen

This is the Web manager home screen.

The following screen is an example for a wireless LAN.

Here, press the [CONFIG] button.

CONFIG Screen

This will display the Login dialog box shown below. Log in as an administrator and then configure interface board settings.

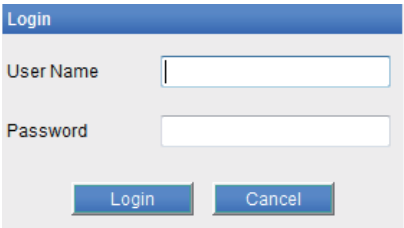

- User Name
  Input a board administrator user name. (Initial setting: admin)
- Password
  Input the administrator user password. (Initial setting: admin)
- [Login] button
  After inputting an administrator user name and password, click the [Login] button.
  This displays the setting screen.
  For details about settings, refer to the separate manual.

CITIZEN SYSTEMS AMERICA CORPORATION

1411 West 190th Street, Suite 675 Gardena, CA 90248
Tel: (310) 781-1460 Fax:(310) 781-9152
http://www.citizen-systems.com

CITIZEN SYSTEMS EUROPE GmbH

Otto-Hirsch-Brücken 17
70329 Stuttgart
Germany
Tel: +49 (0) 711 49032-0
Fax: +49 (0) 711 49032-45

Elizabeth House, 56-60 London Road
Staines-Upon-Thames, TW18 4HF
United Kingdom
Tel: +44 (0) 20 8893 1900
Fax: +44 (0) 20 8893 0080

http://www.citizen-europe.com

CITIZEN SYSTEMS JAPAN CO., LTD.

6-1-12, Tanashi-cho, Nishi-Tokyo-shi Tokyo, 188-8511. Japan
Tel: +81 (0) 42 468 4608 Fax:+81 (0) 42 468 4687
https://www.citizen-systems.co.jp/printer/

CL-E30X_UM_141EN
PMC-2211
November 2022