CITIZEN

Thermal Transfer Barcode & Label Printer

CL-E720/CL-E730

USER'S MANUAL

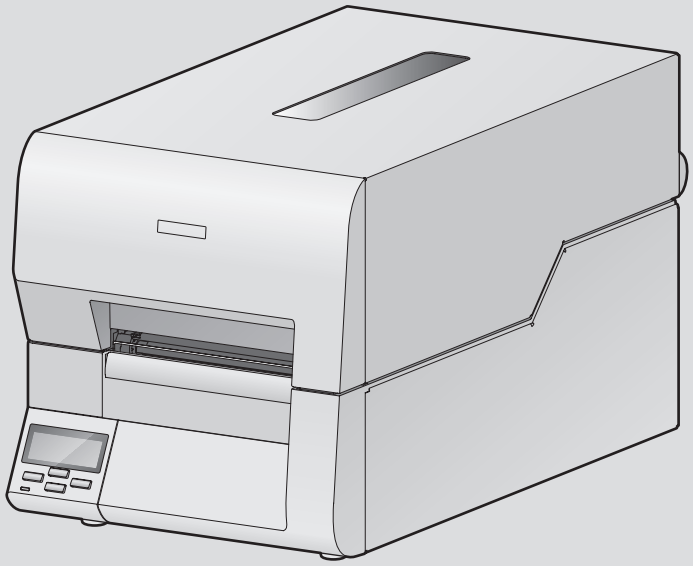

WEEE MARK

En If you want to dispose this product, do not mix with general household waste. There is a separate collection systems for used electronics products in accordance with legislation under the WEEE Directive and is effective only within European Union.

Ge Wenn Sie dieses Produkt entsorgen wollen, dann tun Sie dies bitte nicht zusammen mit dem Haushaltsmüll. Es gibt im Rahmen der WEEE-Direktive innerhalb der Europäischen Union gesetzliche Bestimmungen für separate Sammelsysteme für gebrauchte elektronische Geräte und Produkte.

Fr Si vous souhaitez vous débarrasser de cet appareil, ne le mettez pas à la poubelle avec vos ordures ménagères. Il existe un système de récupération distinct pour les vieux appareils électroniques conformément à la législation WEEE sur le recyclage des déchets des équipements électriques et électroniques qui est uniquement valable dans les pays de l'Union européenne.
Les appareils et les machines électriques et électroniques contiennent souvent des matières dangereuses pour l'homme et l'environnement si vous les utilisez et vous vous en débarrassez de façon inappropriée.

Sp Si desea deshacerse de este producto, no lo mezcle con residuos domésticos de carácter general. Existe un sistema de recogida selectiva de aparatos electrónicos usados, según establece la legislación prevista por la sobre residuos de aparatos eléctricos y electrónicos (RAEE), vigente únicamente en la Unión Europea.

It Se desiderate gettare via questo prodotto, non mescolatelo ai rifiuti generici di casa. Esiste un sistema di raccolta separato per i prodotti elettronici usati in conformità alla legislazione RAEE, valida solo all'interno dell'Unione Europea.

Du Deponeer dit product niet bij het gewone huishoudelijk afval wanneer u het wilt verwijderen. Er bestaat ingevolge de WEEE-richtlijn een speciaal wettelijk voorgeschreven verzamelsysteem voor gebruikte elektronische producten, welk alleen geldt binnen de Europese Unie.

Da Hvis du vil skille dig af med dette produkt, må du ikke smide det ud sammen med dit almindelige husholdningsaffald. Der findes et separat indsamlingssystem for udtjente elektroniske produkter i overensstemmelse med lovgivningen under WEEE-direktivet, som kun er gældende i den Europæiske Union.

Por Se quiser deitar fora este produto, não o misture com o lixo comum. De acordo com a legislação que decorre da Directiva REEE – Resíduos de Equipamentos Eléctricos e Electrónicos, existe um sistema de recolha separado para os equipamentos electrónicos fora de uso, em vigor apenas na União Europeia.

Pol Jeżeli zamierzasz pozbyć się tego produktu, nie wyrzucaj go razem ze zwykłymi domowymi odpadkami. Według dyrektywy WEEE obowiązującej w Unii Europejskiej dla używanych produktów elektronicznych należy stosować oddzielne sposoby utylizacji.

CONTENTS

INTRODUCTION 4
COMPLIANCE STATEMENT FOR EUROPEAN USERS 5
FCC COMPLIANCE STATEMENT FOR AMERICAN USERS 5
EMI COMPLIANCE STATEMENT FOR CANADIAN USERS 6
ETAT DE CONFORMITE EMI A L'USAGE DES UTILISATEURS CANADIENS 6
IMPORTANT SAFETY INSTRUCTIONS 7
NOTICE 8
SAFETY INSTRUCTIONS 9

Chapter 1 Setup

Confirmation of Carton Contents 11
Model Classification 12
Part Names and Functions 13
Connection to Power 20
Driver Installation 20
Connection to a Computer 21

Chapter 2 Printer Operation

Power ON/OFF 22
Normal Operating Mode 23
Setting the Media 25
Setting the Ribbon 34
Mode Settings 37
Quick Setup of the Print Method 57
Emulation Auto Detect: Cross-Emulation™ 58

Chapter 3 Printer Adjustments

Sensor Adjustments 60
Media Thickness Adjustment 65
Media Width Adjustment 66
Adjusting the Ribbon 67
Cleaning 73

Appendixes

Troubleshooting 74
Specifications 77
Interfaces 82
Replacing the Interface Board 106

INTRODUCTION

Thank you for purchasing the CITIZEN CL-E720/CL-E730 printer. This printer is compatible with the maximum media width (118 mm or 4.65 inch), which has been developed for a wide range of applications such as labels, tags and tickets.

Main Features

- High-speed, high-quality printing thanks to its CPU with a maximum operation frequency of 400 MHz and Citizen's history control IC
- With a top cover that opens and closes vertically so that the sides of the printer are not restricted
- With a graphic LCD panel that allows you to see the printer status at one glance, making it easy to implement changes to the printer configuration
- Full-open mechanism enables easy media loading, setting the ribbon and head cleaning
- Equipped with the ARCP™ (Active Ribbon Control and Positioning System) mechanism to ensure optimal ribbon tension that is consistent throughout the ribbon regardless of its dimensions
- Mechanisms are included to allow you to make head balance, head offset, media sensor adjustments, and ribbon tension adjustment easily
- Adjustable sensors that allow the sensor position to be adjusted in the media width direction are provided as standard for media position detection
- A ethernet interface is included in addition to a USB interface, and an optional interface can also be installed
- Serial, Parallel, wired/wireless LAN, and Bluetooth optional interfaces are available
- A USB host function that can control peripheral devices is provided for the wired LAN interface
- XML/Web print functions are provided for the wired/wireless LAN interface
- Easily replaceable auto cutter unit and peeling unit
- ENERGY STAR compliant power saving function

COMPLIANCE STATEMENT FOR EUROPEAN USERS

CE marking shows conformity to the following criteria and provisions:
Low Voltage Directive (2014/35/EU), EMC Directive (2014/30/EU), and RoHS directive (2011/65/EU)
Full text of the EU declaration of conformity is available at the following internet address:
http://www.citizen-systems.co.jp/en/printer/download/eu_doc.html

FCC COMPLIANCE STATEMENT FOR AMERICAN USERS

This equipment has been tested and found to comply with the limits for a Class A digital device, pursuant to Part 15 of the FCC Rules. These limits are designed to provide reasonable protection against harmful interference when the equipment is operated in a commercial environment.
This equipment generates, uses, and can radiate radio frequency energy and, if not installed and used in accordance with the instruction manual, may cause harmful interference to radio communications.
Operation of this equipment in a residential area is likely to cause harmful interference in which case the user will be required to correct the interference at his own expense.

EMI COMPLIANCE STATEMENT FOR CANADIAN USERS

This Class A Information Technology Equipment (ITE) complies with Canadian CAN ICES-3(A)/NMB-3(A).

This equipment generates and uses radio frequency energy and if not installed and used properly, that is, in strict accordance with the manufacturer's instructions, may cause interference to radio and television reception. This Information Technology Equipment (ITE) does not exceed the Class A limits for radio noise emissions from digital apparatus set out in the Radio Interference Regulations of the Canadian Department of Communications. This equipment is designed to provide reasonable protection against such interference in a residential installation. However, there is no guarantee that interference will not occur in a particular installation. If this equipment does cause interference to radio or television reception, which can be determined by turning the equipment off and on, the user is encouraged to try to correct the interference by one or more of the following measures:

- Reorient or relocate the receiving antenna.
- Increase the separation between the equipment and receiver.
- Connect the equipment into an outlet on a circuit different from that to which the receiver is connected.
- Consult the dealer or an experienced radio/TV technician for help.

CAUTION: Use shielded cables to connect this device to computers.
Any changes or modifications not expressly approved by the grantee of this device could void the user's authority to operate the equipment.

ETAT DE CONFORMITE EMI A L'USAGE DES UTILISATEURS CANADIENS

Cet Équipements informatiques (EI) de la classe A est conforme à la norme CAN ICES-3(A)/NMB-3(A) du Canada.

Cet équipment produit et utilise l'énergie à radiofréquences et s'iln'est pas installé et utilisé correctment, c'esst à dire en accord strict avec les instructions du fabricant, il risque de provoquer des intérferences avec la réception de la radio et de latélévision.

Le présent Équipements informatiques (EI) n'émet pas de bruite radio électriques dépassant les limites applicables aux appareils numériques de la classe A prescrites dans le Réglement sur le brouillage radioélectrique édicté par le ministère des Communications du Canada.

Cet équipment est conçu pour fournir une protection satisfaisante contre de telles interférences dans une installation résidentielle. Cependant, il n'y a pas de garantie contre les interférences avec les réceptions radio ou télévision, provoquées par la mise en et hors circuit de l'équipment; aussi, il est demandé a l'utilisateur d'essayer de corriger l'interférence par l'une ou plus des mesures suivantes:

- Réorienter l'antenne de réception.
- Installer l'ordinateur autre part, par égard pour le récepteur.
- Brancher l'ordinateur dans une prise de courant différente de façon à ce que l'ordinateur et le récepteur soient branchés sur des circuits différents.

IMPORTANT SAFETY INSTRUCTIONS

- Read all of these instructions and save them for later reference.
- Follow all warnings and instructions marked on the product.
- Unplug this product from the wall outlet before cleaning. Do not use liquid or aerosol cleaners. Use a damp cloth for cleaning.
- Do not use this product near water.
- Do not place this product on an unstable cart, stand or table. The product may fall, causing serious damage to the product.
- Slots and openings on the cabinet and the back or bottom are provided for ventilation.
  To ensure reliable operation of the product and to protect it from overheating, do not block or cover these openings. The openings should never be blocked by placing the product on a bed, sofa, rug or other similar surface. This product should never be placed near or over a radiator or heat register. This product should not be placed in a built-in installation unless proper ventilation is provided.
- This product should be operated from the type of power source indicated on the marking label.
  If you are not sure of the type of power available, consult your dealer or local power company.
- This product is equipped with a three-pronged plug, a plug having a third (grounding) pin. This plug will only fit into a grounding-type power outlet. This is a safety feature. If you are unable to insert the plug into the outlet, contact your electrician to replace your obsolete outlet. Do not defeat the safety purpose of the grounding-type plug.
- Do not allow anything to rest on the power cord. Do not locate this product where the cord will be walked on.
- If an extension cord is used with this product, make sure that the total of the ampere ratings on the products plugged into the extension cord do not exceed the extension cord ampere rating. Also, make sure that the total of all products plugged into the wall outlet does not exceed 15 amperes for 120V outlet and 7.5 amperes for 220V-240V outlet.
- Never push objects of any kind into this product through cabinet slots as they may touch dangerous voltage points or short out parts that could result in a risk of fire or electric shock. Never spill liquid of any kind on the product.
- Except as explained elsewhere in this manual, don't attempt to service this product yourself. Opening and removing those covers that are marked "Do Not Remove" may expose you to dangerous voltage points or other risks. Refer all servicing on those compartments to service personnel.
- The mains plug on this equipment must be used to disconnect mains power. Please ensure that the socket outlet is installed near the equipment and shall be easily accessible.
- Unplug this product from the wall outlet and refer servicing to qualified service personnel under the following conditions:
  A. When the power cord or plug is damaged or frayed.
  B. If liquid has been spilled into the product.
  C. If the product has been exposed to rain or water.
  D. If the product does not operate normally when the operating instructions are followed. Adjust only those controls that are covered by the operating instructions since improper adjustment of other controls may result in damage and will often require extensive work by a qualified technician to restore the product to normal operation.
  E. If the product has been dropped or the cabinet has been damaged.
  F. If the product exhibits a distinct change in performance, indicating a need for service.

- For Norway User
  The equipment has been designed for connection to IT power distribution system.

NOTICE

- Before use, be sure to read this manual. Please keep this manual for future reference as needed.
- The contents of this manual may change without prior notice.
- Reproduction, transfer, or transmission of the contents of this manual without prior consent is strictly prohibited.
- We are not liable for any damage resulting from the use of the information contained herein, regardless of errors, omissions, or misprints.
- We are not liable for any problems resulting from the use of optional products and consumable supplies other than the designated products contained herein.
- Do not handle, disassemble or repair the parts other than those specified in this manual.
- We are not liable for any damage caused by misuse of the printer or usage of the printer in poor environmental conditions.
- Data residing in the printer is temporary. Therefore, all data will be lost if power is lost. We are not liable for any damage or loss of profits caused by data loss due to failures, repairs, inspections, etc.
- Please contact us if there are any mistakes or ambiguities within this manual.
- If there are missing or incorrectly collated pages in this manual, contact us to obtain a new manual.

Use of the Made for Apple badge means that an accessory has been designed to connect specifically to the Apple product(s) identified in the badge and has been certified by the developer to meet Apple performance standards. Apple is not responsible for the operation of this device or its compliance with safety and regulatory standards. Please note that the use of this accessory with an Apple product may affect wireless performance.

1. Bluetooth® is a registered trademark of Bluetooth SIG, Inc. in the US.
2. CITIZEN is a registered trademark of Citizen Watch Co., Ltd.
2. CITIZEN est une marque enregistrée de Citizen Watch Co. Ltd.
3. Company and product names mentioned in this document are the trademarks or registered trademarks of their respective owners.
4. Ethernet is a registered trademark of Fuji Xerox Co., Ltd.
5. QR Code is a registered trademark of DENSO WAVE INCORPORATED.
6. Datamax® is a registered trademark of Honeywell International Inc.
7. Maxi Code is a registered trademark of UPS.
8. PDF417 is a trademark or registered trademark of Motorola, Inc. in the U.S. and other countries.
9. UFST™ and CG Triumvirate™ are trademarks of Monotype Imaging, Inc.
10. TrueType™ is a trademark of Apple Inc.
11. Apple, Apple TV, Apple Watch, iPad, iPad Air, iPad Pro, iPhone, and Lightning are trademarks of Apple Inc., registered in the U.S. and other countries. tvOS is a trademark of Apple Inc. The trademark “iPhone” is used in Japan with a license from Aiphone K.K.
12. Datamax® is a registered trade mark of Datamax Bar Code Products Corporation.
13. Zebra® is a registered trade mark of ZIH corp.
14. ARM and Cortex are registered trademarks or trademarks of ARM Limited.
15. BarTender is a registered trademark of SEAGULL SCIENTIFIC, INC.

Copyright © 2018 by CITIZEN SYSTEMS JAPAN CO., LTD.

SAFETY INSTRUCTIONS
which must be strictly observed !

- **To prevent personal injury or property damage, the following shall be strictly observed.**
- **The degree of possible injury and damage due to incorrect use or improperly following instructions is described below.**

⚠ **Warning**	**Indicates a situation which, if not observed and handled properly, could result in death or serious injury.**
⚠ **Caution**	**Indicates a situation which, if not observed and handled properly, could result in injury.**

⚠ **:This is a mark to call attention to the reader.**

⚠ Warning

Never perform the following. If not avoided, these may cause damage or trouble to the printer or cause the printer to overheat and release smoke and cause burns or an electrical shock. If the printer is damaged or is malfunctioning, be sure to turn the printer off immediately and remove the power cord from the outlet, then consult our service personnel.

- Do not jolt or impact to the printer by stepping on, dropping or hitting the printer.
- Do not place the printer in a poorly ventilated area, or shut off the air vent of the printer.
- Do not place the printer where chemical reactions occur, such as in laboratories or where air is mixed with salt or gas.
- Do not use a power voltage or frequency other than those specified.
- Do not plug/unplug the power cord or attach/detach the interface cable by simply grabbing the power cord or interface cable. Do not pull or carry the printer when the tension of the power cord or interface cable is increased.
- Do not drop or put foreign matter such as clips and pins into the printer. This may cause problems.
- Do not plug the power cord into an outlet with many loads.
- Do not spill drinks such as tea, coffee and juice on the printer or spray insecticide on the printer. If drink or water is spilled, first be sure to turn the power off and remove the power cord from the outlet, then consult our service personnel.
- Do not disassemble or modify the printer.

Discard or safely store the plastic packing bag. This bag should be kept away from children. If the bag is pulled over a child's head, it may cause suffocation.

General Precautions

⚠ Caution

- Prior to operation, read the safety instructions carefully and observe them.
- Do not drop or put foreign matter such as clips and pins into the printer. This may cause problems.
- Be careful when moving or carrying the printer. Dropping the printer may cause injury or property damage.
- Make sure if you open the top cover, it is opened all the way. If only partially open, the cover could slam shut, possibly causing injury.
- When the cover is open, be careful of the corners of the cover. They could cause injury.
- Do not open the printer during printing.
- When cleaning the surface of the printer case, do not use the cloth that is soaked in thinner, trichloroethylene, benzine, ketone or similar chemicals.
- Do not use the printer where there is a lot of oil, iron particles, or dust.
- Do not spill liquids or spray insecticide on the printer.
- Do not jolt or impact to the printer by stepping on, dropping or hitting the printer.
- Operate the control panel properly. A careless, rough handling may cause problems or malfunction. Do not use such sharp-edged tool as a ballpoint pen for operation.
- Be careful of the edges of the plates so injury or property damage is possible.
- If a problem occurs during printing, stop the printer immediately and unplug the power cord from the outlet.
- When printer trouble occurs, do not try to dissemble it. Instead, consult our service personnel.

Precautions When Installing the Printer

⚠ Caution

- Prior to operation, read the safety instructions carefully and observe them.
- Do not use or store the printer near fire, excessive moisture, in direct sunlight, near an air conditioner or heater or other source of unusually high or low temperature or humidity or excessive dust.
- Do not place the printer where chemical reactions occur, such as in a laboratory.
- Do not place the printer where air is mixed with salt or gas.
- The printer must sit on a firm, level surface where there is ample ventilation. Never allow the printer's air vent to be blocked by a wall or other object.
- Do not put anything on the top of printer.
- Do not place the printer near a radio or television, and do not use the same wall outlet for the printer and radio or television. Radio or television reception could be adversely affected.
- Do not use a power voltage or frequency other than those specified.
- Do not put anything on the power cord or step on it.
- Do not drag or carry the printer with the power cord or interface cable.
- Avoid plugging the power cord into an outlet with many loads.
- Do not bundle the power cord when inserting the plug.
- Always grip the plug housing, not the cord, to plug/unplug the power cord.
- Make certain the power is turned off before connecting/disconnecting the interface cable.
- Avoid lengthening the signal cable or connecting it to any noise-producing device. If it is unavoidable, use the shielded cable or twisted pair for each signal.
- Place the printer near the outlet where the power cord can be unplugged easily to shut off power.
- Use the AC outlet that accepts a three-pronged plug. Otherwise, static electricity may be generated and there will be danger of electric shock.

Confirmation of Carton Contents

Check that the following accessories are included with the printer in the carton.

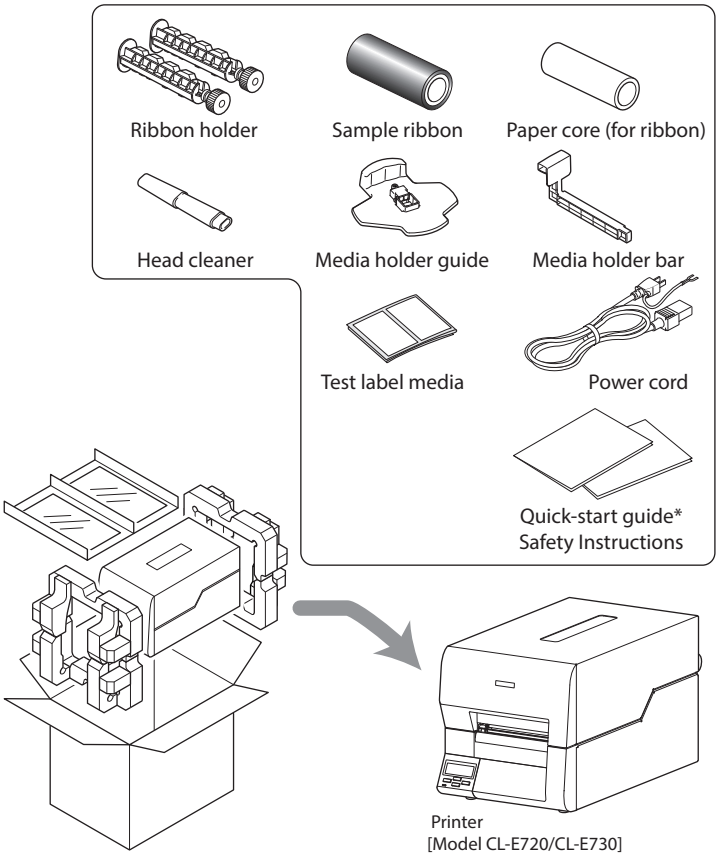

Note: The empty carton and packing materials should be stored for future shipping of the printer.

* You can download the driver, SDK, utility and BarTender (label creation software) from the URL listed in the Quick Start Guide.

⚠ Caution

- Be careful when moving or carrying the printer and when taking the printer out of the carton. The printer may cause injury or property damage if dropped. Be sure to grip the printer housing firmly when taking it out of the carton. Do not grip the printer by the foam packing material which may break, causing the printer to drop.
- When opening the cover, open it all the way. If only part way open, the cover could slam shut, possibly causing injury.
- Be careful of the edge of the cover when the cover is opened. It may cause injury or property damage.
- Be careful of the edges of the metal plates so injury or property damage is possible.

Model Classification

Model numbers indicate printer features according to the following system.

CL - E720 U B N

① Resolution
2: 203DPI
3: 300DPI

② Market
U: USA
E: EU
C: China
A: Asia

③ Body case color
B: Black

④ Interface
N: USB + Ethernet
ET2: Ethernet
HET: Ethernet (USB host function) + USB
BT: Bluetooth

Contact us in advance for special combinations, some of which may not be available.

Part Names and Functions

Front View

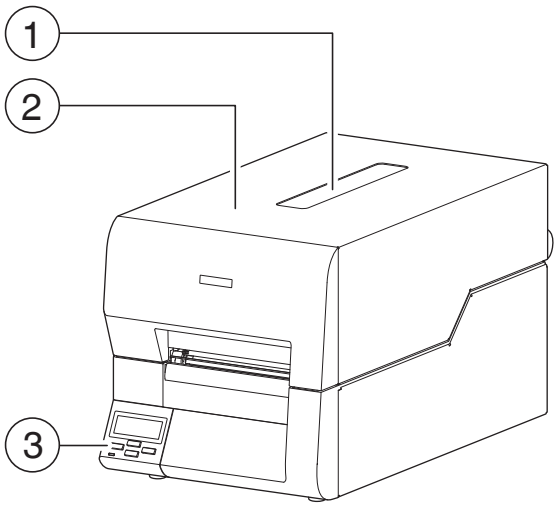

① **Top cover window**
The amount of ribbon and media remaining can be checked through this window.

② **Top cover**
Is opened vertically to set media or ribbon.

Operation panel (p.18)

③ **Operation panel**
This is used to make changes and adjustments to the printer and its configuration

Inside the printer

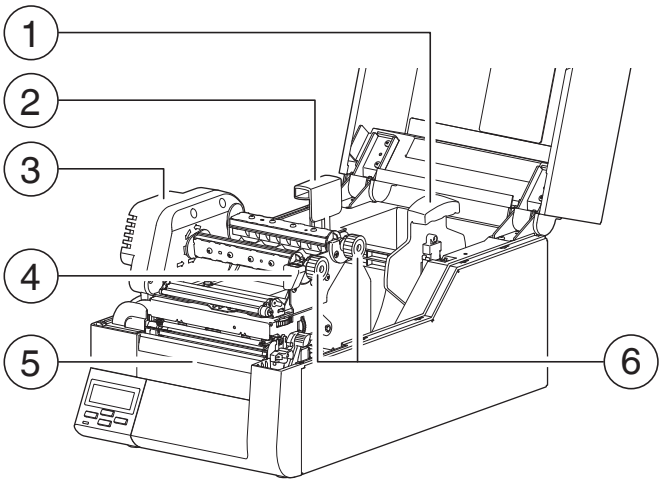

① **Media holder guide**
This guide is moved horizontally to match the media size. The guide can be sliding it from the holder bar.

② **Media holder bar**
The media is supported by the media holder bar when installed in the printer.

Setting the Ribbon (p.34)

③ **Ribbon drive unit**

④ **Head close knob**
Push the head close knob to lock the mechanism closed. If you push on another part of the mechanism, the printer may not lock closed correctly.

⑤ **Front cover**
It is removed to install optional units such as the peeler or cutter.

⑥ **Ribbon holder**
It is used to attach the ribbon and paper core.

Part Names and Functions

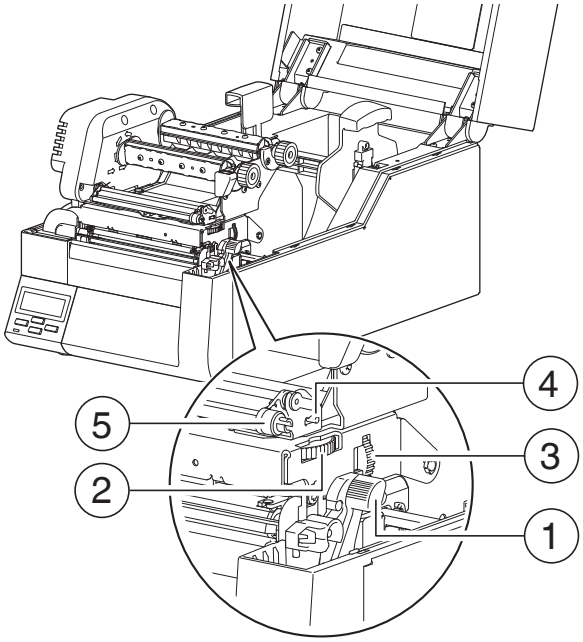

① **Large blue-head open lever**
The head unit can be raised to install media by pushing this lever.
It locks the head unit during printing.

Media Width Adjustment (p.66)

② **Media width adjustment dial**
It is adjusted to match the width of the media.

Media Thickness Adjustment (p.65)

③ **Media thickness adjustment dial**
It is adjusted to match the thickness of the media.

Ribbon Tension Adjustment (p.67)

④ **Front (winding side) ribbon tension adjustment knob**
This is adjusted according to the width of the ribbon that is used. It is also used when the ribbon is wrinkled or slips.

Ribbon Balance Adjustment (p.69)

⑤ **Front (winding side) ribbon left-right balance adjustment knob**
It is used to perform an adjustment when the ribbon is wrinkled.
Normally set it to the center position.

Part Names and Functions

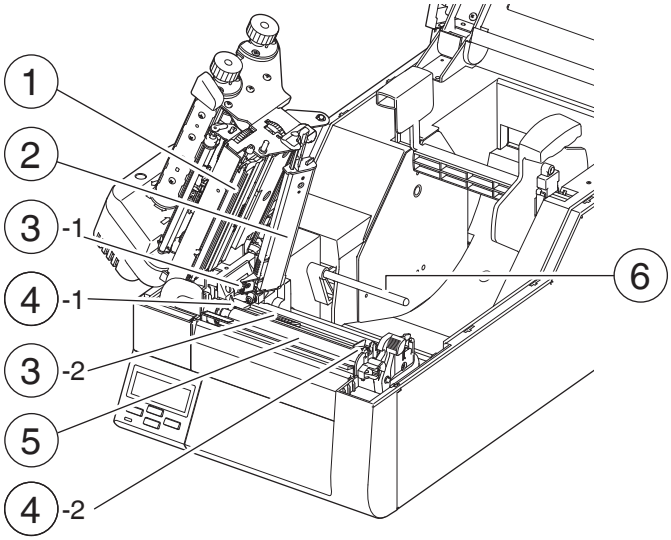

① **Thermal printhead**

This is the printhead. Avoid touching this with your fingertips and leaving grease or dirt on the printhead surface.

② **Sensor arm**

The media can be installed by raising this arm.
The media can be held in place by lowering this arm.

Setting sensor positions (p.27)
Sensor Adjustments (p.60)

③ **Upper sensor (③-1) and bottom sensor (③-2)**

When used as a label detection sensor (transparent sensor), it is used by matching the sensor markings of the upper sensor and the bottom sensor. When used as a black mark detection sensor (reflective sensor), it is used by matching the sensor marking on the bottom sensor with the position of the black mark on the liner or media backing.

Setting the Media (p.25)

When used as a continuous media detection sensor (reflective sensor), move the bottom sensor close to the center of the width of the media.

④ **Media guides**

Left fixed media guide (④-1) and right movable media guide(④-2)

The end of the media is matched to the left fixed media guide, then the right side movable media guide is moved horizontally to match it to the media size. And the movable media guide is used as a guide to match the upper sensor and bottom sensor when using the label detection sensor (transparent sensor) or continuous media detection sensor (reflective sensor).

⑤ **Platen**

Interlocked with the thermal printhead, it feeds media backwards or forwards.

⑥ **Media damper**

When roll paper is used, this prevents marking on the media especially at higher print speeds.

Part Names and Functions

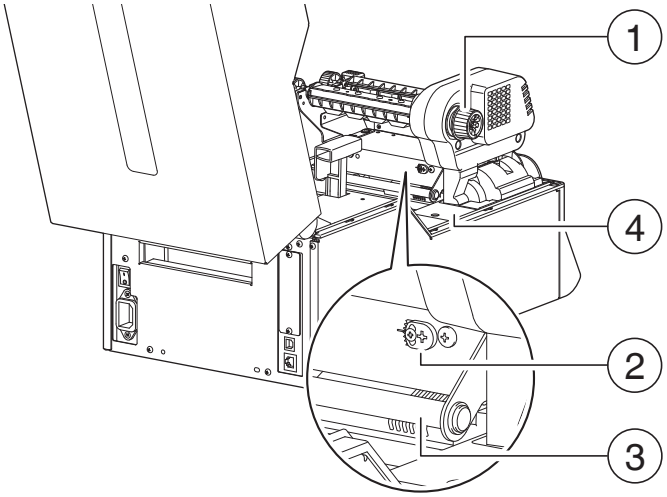

Ribbon Tension Adjustment (p.67)

① **Rear (feeding side) ribbon tension adjustment knob**
The adjustment is done according to the width of the ribbon to be used. It is adjusted when slippage or wrinkling appears in the ribbon.

Ribbon guide adjustment (p.71)

② **Ribbon guide adjusting cam**
Adjustment can eliminate the slack in ribbon and prevent occurrence of wrinkles.

③ **Ribbon guide shaft**
It guides the ribbon to be fed.

④ **Optional unit connector cover**
It is opened when the cables of the cutter unit and the peeler unit are connected. Do not remove during normal use.

Operation panel

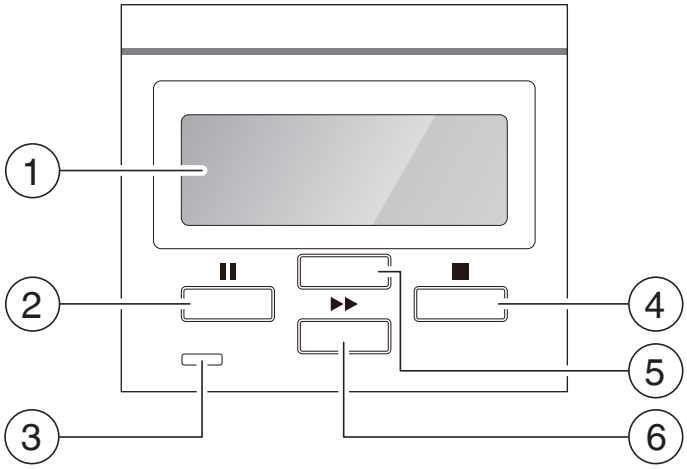

Normal Operating Mode (p.23)

① **LCD display**
This displays the operational status of the printer and the menu settings.

② **Pause key**
This temporarily stops printing.

LED Functions (p.24)

③ **LED**
This is lit when the printer power is on. (green)
This is lit when the printer is in an alarm or error status. (red)

④ **Stop key**
This stops printing or cancels the alarm.

⑤ **MENU key**
This key enters the menu setting mode or reprints the final label, depending on printer status.

⑥ **Feed key**
This key feeds the media to the top of the next label or form.

Rear View

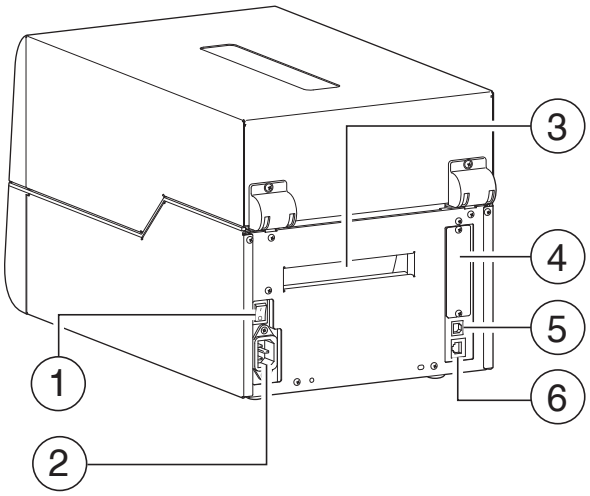

Power ON/OFF (p.22)

① **Power switch**
The is the power switch for the printer.

Connection to Power (p.20)

② **Power cord inlet**
The connector of the enclosed power cord is connected here.

③ **Fanfold paper insertion slot**
If you want to use fanfold paper, insert the media into this slot from outside the printer.

Replacing the Interface Board (p.106)

④ **Option interface**
Optional interface board can be installed by removing the interface cover. Contact your retailer if you want to use the option interface.

USB Interface (p.82)

⑤ **USB interface (USB2.0)**
This receives USB transmission of data from a host computer.

Ethernet Interface (p.83)

⑥ **Ethernet interface**
Data from host computer is received via wired LAN communication.
NOTE: Do not connect the USB cable to the wired LAN connector. Doing so may damage the connector.

Connection to Power

1. **Check that the power switch to the printer is turned OFF.**
2. **Connect the connector of the power cord to the power cord inlet on the printer.**
3. **Insert the plug of the power cord in the AC outlet.**

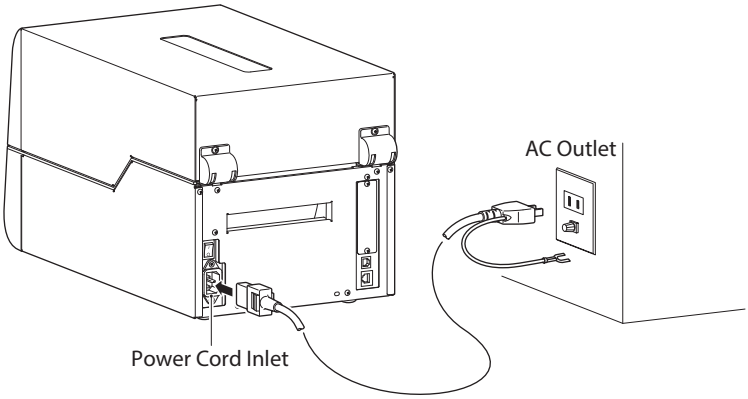

⚠ Caution

Use an AC outlet that accepts a three-pronged plug. Otherwise, static electricity may be generated and there will be danger of electric shock.

Driver Installation

Install the printer driver onto the host computer. Printer drivers are available for download from the Citizen Systems support website.
The latest documentation, drivers, utilities, and other support information are also available from this website.
https://www.citizen-systems.co.jp/en/printer/download/
Once a printer driver has been downloaded, follow the on-screen instructions to install the driver

Connection to a Computer

Ethernet Interface (p.83)

USB Interface (p.82)

This product has two interfaces that can be used to receive printing data: a USB port (USB2.0) and wired LAN port.
An optional internal parallel port (IEEE1284), serial port (RS232C) or Wireless LAN port or Bluetooth can be added by your dealer.
To connect the cable, proceed as follows:

1. **Turn OFF both power switches of the printer and the computer.**
2. **Connect one end of the interface cable to the interface connector on the back of the printer and secure it with locks or locking screws, where available.**
3. **Connect the other end of the interface cable to the interface connector on the computer and secure it with locks or locking screws, where available.**

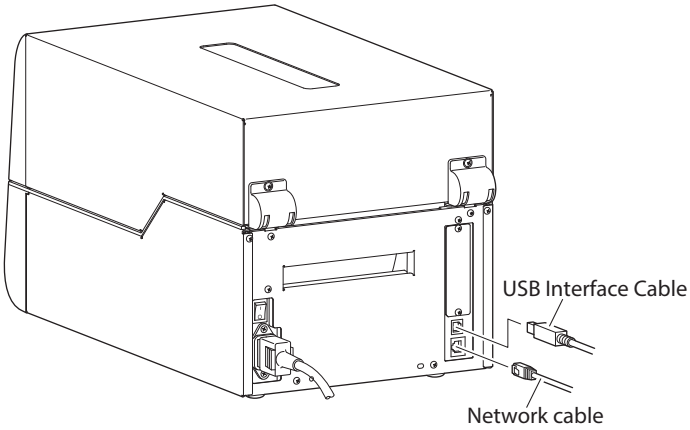

Note: If an optional parallel port (IEEE1284), serial port (RS232C) or Wireless LAN port is used, contact your Citizen Systems dealer.

⚠ Caution

Connect only the LAN Connector to the LAN receptacle.
(Do not connect the external cable which may be applied overvoltage.)

Power ON/OFF

Turning on the power

1. **Turn on the power switch on the back of the printer.**
2. **The LED are lit.**

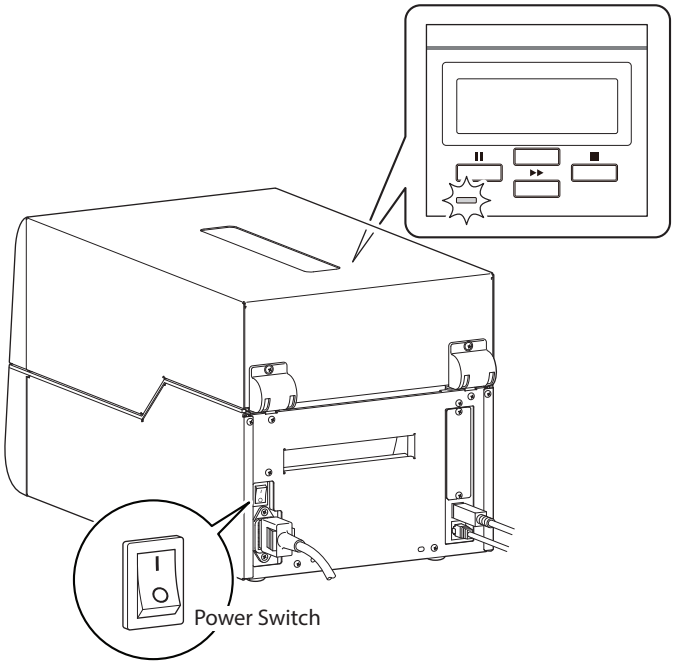

Turning off the power

1. **Turn off the power switch on the back of the printer.**
2. **The LED go off.**

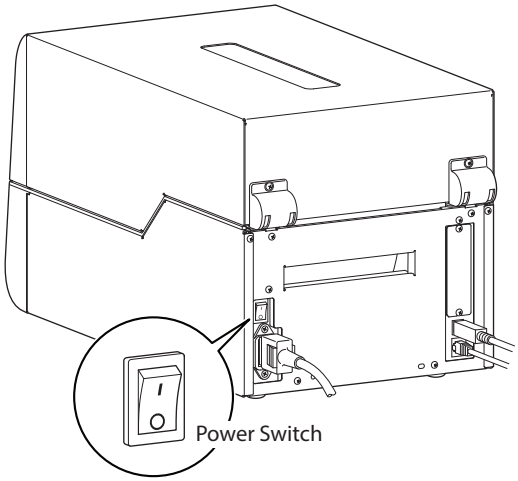

Menu Setup Mode (p.39)

Normal Operating Mode

When the power is turned on, the printer enters normal operating mode. The control keys activate the following functions.

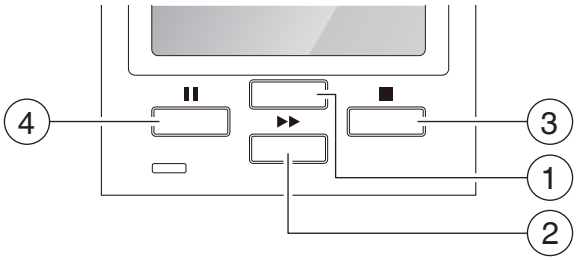

① **MENU key: Performs selection of Menu Setup Mode and re-printing**

- In normal operation, this key will enter the Menu Setup Mode
- The last label can be reprinted by pressing the MENU key in Normal operating mode. Printing of the final label is performed based on the setting of "Menu Key Action" in "After Print" menu.
  If MENU key has been set to re-print, press the menu key for at least 4 seconds to shift to Menu Setup Mode.

② **Feed key: Feeds media**

- Pressing this key feeds media to the print start position. The distance it is fed is determined by automatically detecting the front end of the media when using label media, and when continuous media has been designated, a fixed quantity is fed, then feeding stops.
- When the TEAR OFF setting is effective, feeding stops when the media has been fed to the TEAR OFF location.
- When the optional cutter unit is installed, the media is fed to the cut position then it is cut.
- If the optional peeler unit is installed, the media is fed to the peeling location. When the media is pausing at the peeling position, feeding does not occur, even if the Feed key is pushed.

③ **Stop key: It stops printing and cancels the alarm**

- Pushing this key once during printing puts the printer in pause mode after the label is issued. It is possible to cancel 1 batch of label issuing data by pressing the Stop key for 4 seconds or longer in pause status. (The LCD indicates "Job Clear" during cancel.)
- Pushing this key once cancels the abnormal head resistance alarm.

④ **Pause key: Temporarily pauses printing**

- When this key is pushed once, the LCD indicates "Pause" and the printer temporarily pauses.
- When it is pushed during printing, the printer pauses after the label currently being printed is issued. Pressing the key a second time restarts printing and the remaining number of designated labels are printed.

LED Functions

In addition to normal operating mode, when an abnormal condition is detected in the printer, an alarm sounds and the LED lights up (red) to indicate the type of error. The LCD indicates the error message.

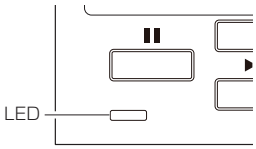

Table of Alarm and Error Indications

Item	LED	LCD
Printing possible (no error)	Lights up (green)	Ready
Stop or Pause key on operation panel pressed	Lights up (green)	Pause
Head temperature - high temperature abnormality	Lights up (red)	Alarm Head Hot
Head temperature - low temperature abnormality	Lights up (red)	Error Head Cold
PF motor temperature abnormality	Lights up (red)	Error PFMotor Hot
Ribbon motor temperature abnormality	Lights up (red)	Error RBMotor Hot
Cutter motor temperature abnormality	Lights up (red)	Alarm Cutter Hot
Head open	Lights up (red)	Error Head Open
Paper end	Lights up (red)	Error Paper End
Paper out (paper position undetectable)	Lights up (red)	Error Paper Load
Paper jam	Lights up (red)	Error Paper Jam
Head low resistance value abnormality*	Lights up (red)	Alarm Head Check
Ribbon end	Lights up (red)	Error Ribbon End
Ribbon feed error	Lights up (red)	Error Ribbon Run
Serial communications error (receiving buffer overrun)	Lights up (red)	Error Serial Over Run
Serial communications error (parity)	Lights up (red)	Error Serial Parity
Serial communications error (framing)	Lights up (red)	Error Serial Framing
Bluetooth communication error (sending/receiving timeout)**	Lights up (red)	Error BT Time Out
Bluetooth communication error (framing)**	Lights up (red)	Error BT framing
System error	Lights up (red)	Error System Fail
***Auto-cutter abnormality (foreign object etc.)	Lights up (red)	Error Cutter Fail

* Pushing the STOP key once cancels the alarm
** Supported by Bluetooth interface model only
*** Applicable only when using the optional auto cutter

Setting the Media

Media Sizes

The position of label and tag media is sensed by either a label detection sensor (Transparent sensor) or a black mark detection sensor (Reflective sensor).
Label detection sensor (Transparent sensor):
Detects the gaps between label media and notches of tag media
Black mark detection sensor (Reflective sensor) :
Detects the black mark

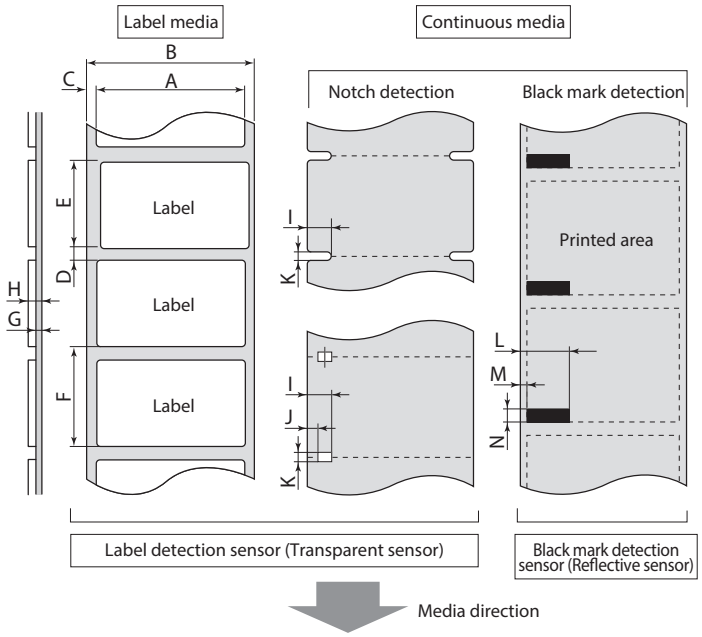

		Min. value mm (inches)	Max. value mm (inches)
A	**Label width**	**19.50 (0.77)**	**118.00 (4.65)**
B	**Liner width**	**19.50 (0.77)**	**118.00 (4.65)**
C	**Label left edge position**	**0 (0)**	**2.54 (0.10)**
D	**Length of gap between labels**	**2.54 (0.10)**	**2539.75 (99.99)**
E	**Label length**	**6.35 (0.25)**	**2539.75 (99.99)**
F	**Label pitch**	**6.35 (0.25)**	**2539.75 (99.99)**
G	**Liner thickness**	**0.06 (0.0025)**	**0.125 (0.0049)**
H	**Total media thickness**	**0.06 (0.0025)**	**0.25 (0.01)**
I	**Position of right edge of notch**	**3.60 (0.14)**	**60.80 (2.39)**
J	**Position of left edge of notch**	**0 (0)**	**57.20 (2.25)**
K	**Notch length**	**2.54 (0.10)**	**17.80 (0.70)**
L	**Right edge of black mark**	**15.00 (0.59)**	**66.50 (2.62)**
M	**Left edge of black mark**	**0 (0)**	**51.5 (2.02)**
N	**Black mark width**	**3.18 (0.125)**	**17.80 (0.70)**

* Use a label detection sensor (Transparent sensor) for label media gaps and media with black marks.
* Use the continuous media detection sensor (reflective sensor) for continuous media with no notches or black marks.
* Use a label detection sensor (Transparent sensor) for fan fold media.
* If the label pitch is 1 inch or less, set the Small Media Adjustment menu to ON and match it to the label that uses the value of the Small Media Length menu.
* Use a carbon ink of OD value 1.5 or more for black mark.

Menu Setting Table (p.45)

Loading roll media

1. **Push the large blue-head open lever to release the head unit, and then lift the sensor arm by hand as shown below.**

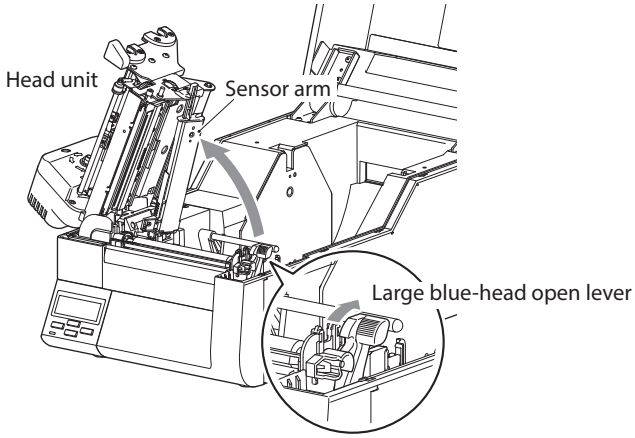

2. **Load the media in the Media holder bar.**
   First, insert the media holder bar into the media, and then, attach the media holder guide. As orientation of the media varies according to the orientation of the printing surface, load the media by referring to step 5.

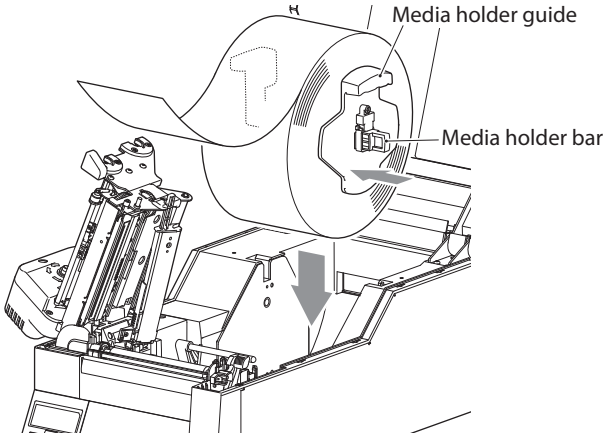

Media Sizes (p.25)

3. **Face the front side of the printer and set the media in such a manner that the media holder guide comes on the right side of the media.**
   When lifting the media, use the handles on the media holder placed on either side.
4. **Move the media roll so it is touching the leftside of the housing.**
   Note: Do not try to hold the media too tightly with these guides as it will cause the printer to jam during printing.

5. **The path of the media varies according to the orientation of the printing surface. Set the media according to the diagram shown below.**

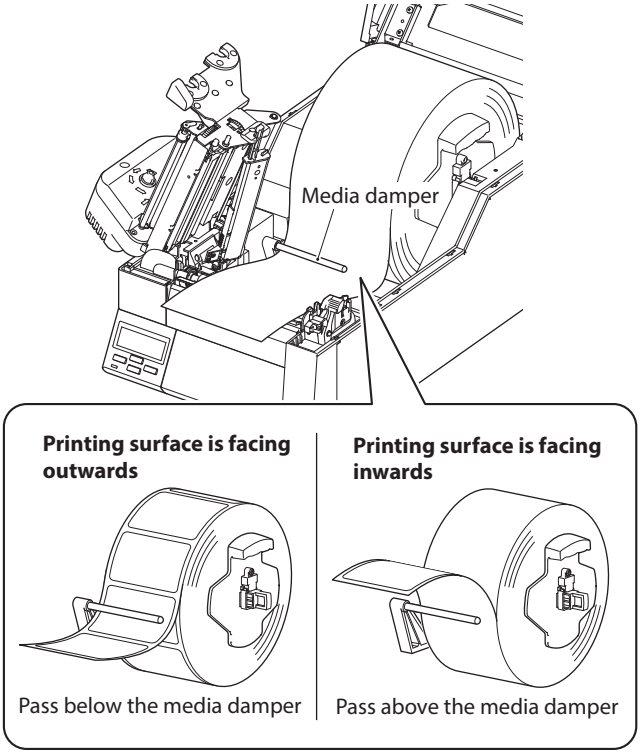

6. **Selecting the sensor**
   With the power turned on, press the Stop key for at least 4 seconds while holding the Feed key. Each time the key is pressed, a buzzer sounds and the setting switches between the label detection sensor (transparent sensor), the black mark detection sensor (reflective sensor), and the continuous media detection sensor (reflective sensor). When the label detection sensor (transparent sensor) is selected, the buzzer sounds once, and "See Through" is displayed. When the black mark sensor (reflective sensor) is selected, the buzzer sounds twice, and "Reflect" is displayed. When the continuous media detection sensor (reflective sensor) is selected, the buzzer sounds thrice, and "None" is displayed.
7. **Setting sensor positions**

   When using a label detection sensor (transparent sensor)

   Move the bottom sensor close to the center of the width of the media, then align the upper sensor marker and the bottom sensor marker (white) using the movable media guide.

   Be careful that media with black marks does not pass the media sensor.

Sensor Selection Method (p.60)

Adjusting the label detection sensor (Transparent sensor) (p.61)

Setting the Media

When using media that is 4 inches wide, position the upper sensor and the bottom sensor all the way to the right (large blue-head open lever side).

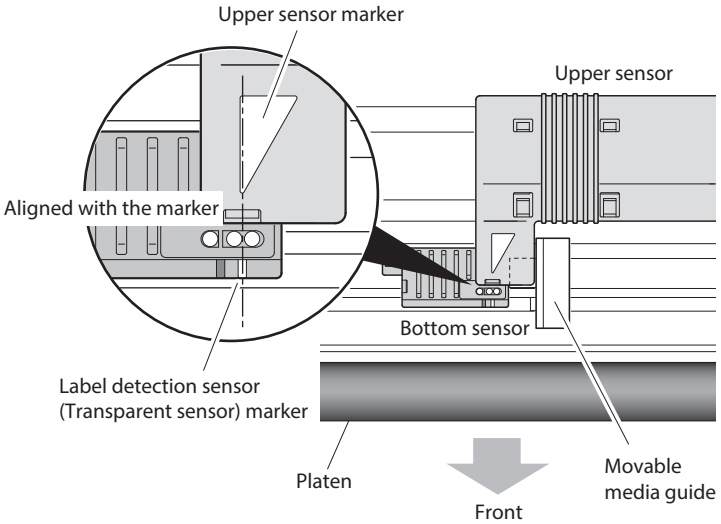

⚠ Caution

The bottom sensor and upper sensor must be in alignment with each other.

Adjusting the black mark detection sensor (Reflective sensor) (p.62)

When using a black mark detection sensor (Reflective sensor)

Adjust the position of the sensor so that the black mark detection sensor (Reflective sensor) marker of the bottom sensor is at the center of the black mark of the media as shown below.

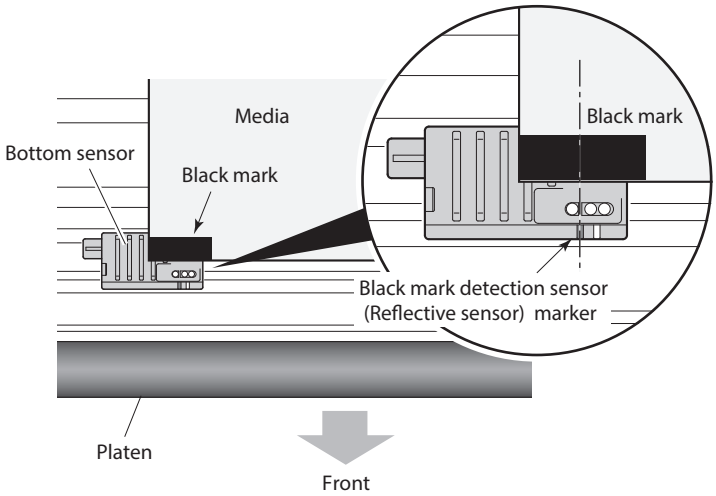

⚠ Caution

Do not install the upper sensor directly above the bottom sensor.
Normal operation may not be possible.

Adjusting the continuous media detection sensor (Reflective sensor) (p.64)

When using a continuous media detection sensor (reflective sensor)

Move the bottom sensor close to the center of the width of the media.

Be careful that media with black marks does not pass the media sensor.

When using media that is 4 inches wide, position the bottom sensor all the way to the right (large blue-head open lever side).

⚠ Caution

Do not install the upper sensor directly above the bottom sensor.
Normal operation may not be possible.

8. Lift the sensor arm up temporarily and adjust the media guide. Align the media with the left fixed media guide, align the right movable media guide with the media width, and lower the sensor arm.

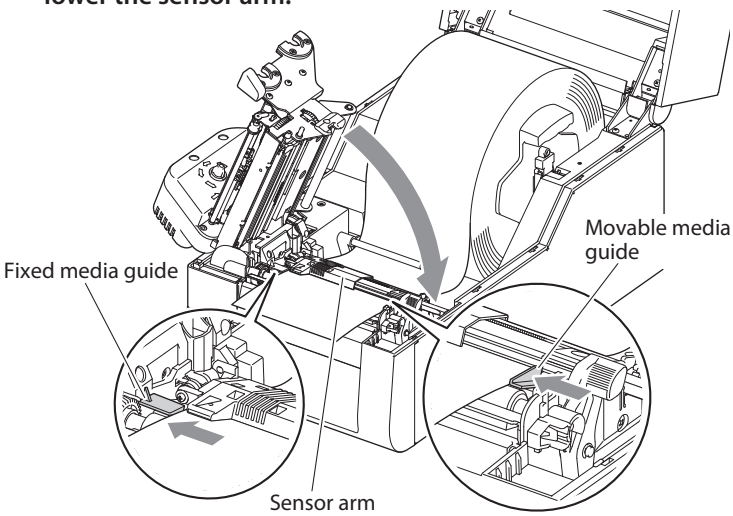

9. Push the head close knob to lower and lock the head unit. Be sure to always push the head close knob to lock the head unit. Align it with the width of the media that has been set, then set the media width and media thickness adjustment dials. See "Chapter 3 Printer Adjustments".

Media Thickness Adjustment (p.65)

Media Width Adjustment (p.66)

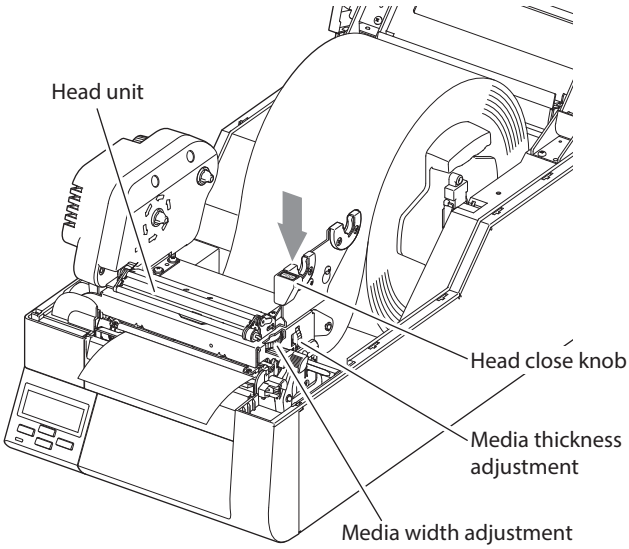

10. **Push the FEED key to feed the media. It will halt at the next print start position.**

Loading fanfold media

1. **Push the large blue-head open lever to release the head unit, and then lift the sensor arm by hand as shown below.**

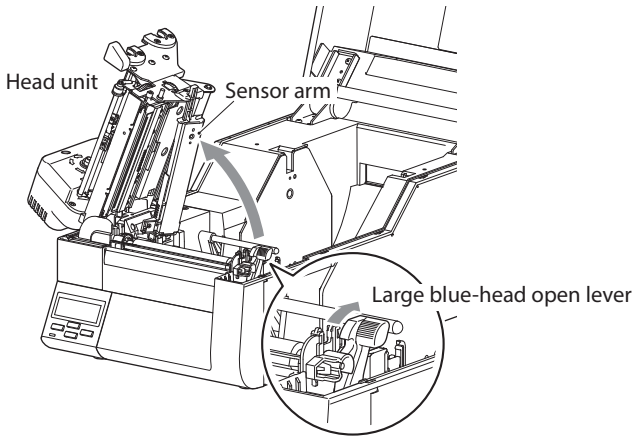

2. **Insert the fanfold media through from the external media feed port at the back of the printer.**
3. **Leaving the specified gap from the printer, place the fanfold paper so that it is at the same height as the printer and becomes parallel with the printer as shown in the figures below.**

Setting the Media

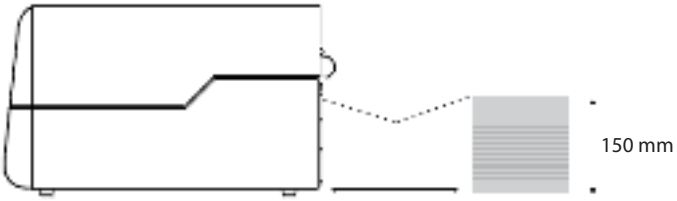

Label length + 50 mm or more

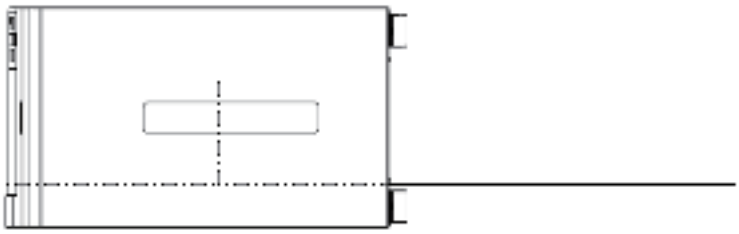

Place the fanfold media so that it is parallel with the printer.

4. **Insert the fanfold media through below media holder bar and set the holder by aligning it with the media width.**
   Note: **Do not try to hold the media too tightly with these guides as it will cause the printer to jam during printing.**
5. **Insert the fanfold media through below the media damper.**
6. **Selecting the sensor**
   With the power turned on, press the Stop key for at least 4 seconds while holding the Feed key. Each time the key is pressed, a buzzer sounds and the setting switches between the label detection sensor (transparent sensor), the black mark detection sensor (reflective sensor), and the continuous media detection sensor (reflective sensor).
   When the label detection sensor (transparent sensor) is selected, the buzzer sounds once, and "See Through" is displayed.
   When the black mark sensor (reflective sensor) is selected, the buzzer sounds twice, and "Reflect" is displayed.
   When the continuous media detection sensor (reflective sensor) is selected, the buzzer sounds thrice, and "None" is displayed.
7. **Setting sensor positions**

   When using a label detection sensor (transparent sensor)

   Move the bottom sensor close to the center of the width of the media, then align the upper sensor marker and the bottom sensor marker (white) using the movable media guide.

   Be careful that media with black marks does not pass the media sensor.

   When using media that is 4 inches wide, position the upper sensor and the bottom sensor all the way to the right (large blue-head open lever side).

Sensor Selection Method (p.60)

Adjusting the label detection sensor (Transparent sensor) (p.61)

Setting the Media

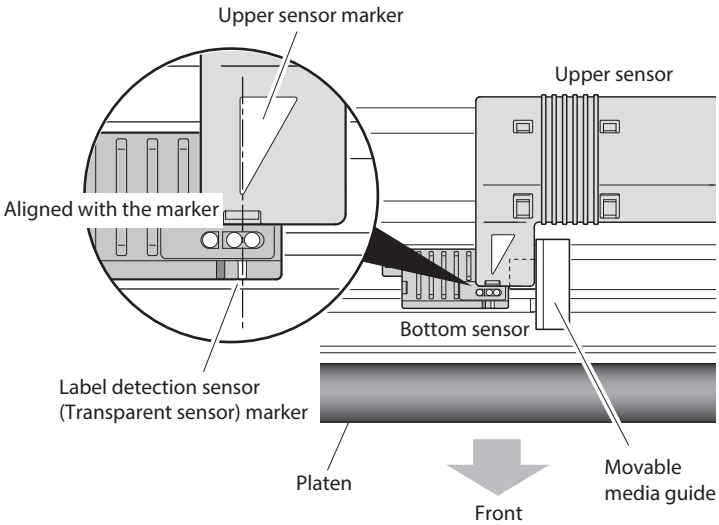

⚠ Caution

The bottom sensor and upper sensor must be in alignment with each other.

Adjusting the black mark detection sensor (Reflective sensor) (p.62)

When using a black mark detection sensor (Reflective sensor)
Adjust the position of the sensor so that the black mark detection sensor (Reflective sensor) marker of the bottom sensor is at the center of the black mark of the media as shown below.

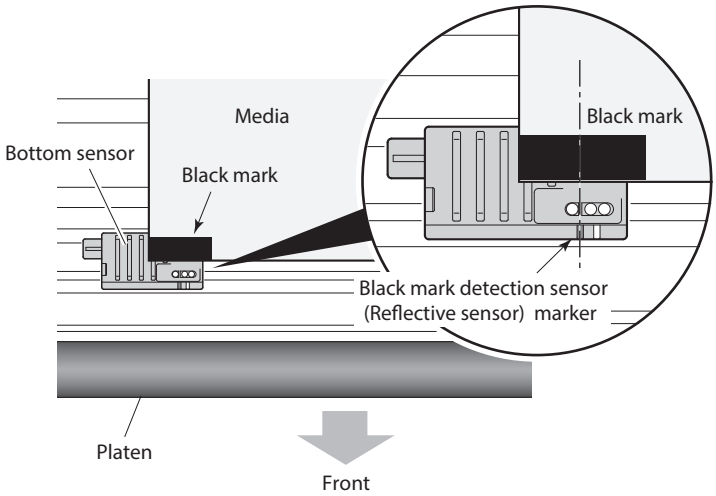

⚠ Caution

Do not install the upper sensor directly above the bottom sensor.
Normal operation may not be possible.

Adjusting the continuous media detection sensor (Reflective sensor) (p.64)

When using a continuous media detection sensor (Reflective sensor)

Move the bottom sensor close to the center of the width of the media.

Be careful that media with black marks does not pass the media sensor.

When using media that is 4 inches wide, position the bottom sensor all the way to the right (large blue-head open lever side).

Caution

Do not install the upper sensor directly above the bottom sensor.
Normal operation may not be possible.

8. **Lift the sensor arm up temporarily and adjust the media guide. Align the media with the left fixed media guide, align the right movable media guide with the media width, and lower the sensor arm.**
9. **Push the head close knob to lower and lock the head unit. Be sure to always push the head close knob to lock the head unit. Align it with the width of the media that has been set, then set the media width and media thickness adjustment dials. See "Chapter 3 Printer Adjustments".**

Media Thickness Adjustment (p.65)

Media Width Adjustment (p.66)

10. **Push the Feed key to feed the media. It will halt at the next print start position.**

Cut position of media with a perforated line

When tearing manually, the media can be torn at the position of the perforated line.
When adjusting the paper stop position, set the vertical printing position to a value larger than the media stop position. Otherwise, the media may come off the platen during back feeding.
Adjust each setting using the printer driver or LabelPrinterUtility.

Setting the Ribbon

The following kinds and sizes of ribbons can be used.

Types ..... Inside wound and outside wound ribbon
Recommended ribbon ..... B110A Ricoh
Sample ribbon ..... B110TI Ricoh
Max. ribbon width ..... 114.0 mm (4.50 inch)
Min. ribbon width ..... 25.4 mm (1.00 inch)
Max. ribbon length ..... 360.0 m (1181 feet)
Max. roll diameter ..... 74.0 mm (2.90 inch)
Inner diameter of the paper core ..... 25.4 ± 0.25 mm (1.00 ± 0.01 inch)
Outer diameter of the paper core .... 33.4 ± 0.50 mm (1.31 ± 0.02 inch)
Lead tape length ..... Less than 80 mm

* If media less than 4 inches (102 mm) is used, it is recommended that the ribbon is at least 5 mm wider than the media.

Setting method

Regardless of the orientation of winding, the rear side of ink surface of ribbon is set on the front surface of the thermal print head. The method for setting outward winding ribbon is explained here.

1. **Place the attached ribbon and paper core separately on one of the two attached ribbon holders. Insert the two ribbon holders into the ribbon and paper cores ensuring that they are pushed in all the way.**

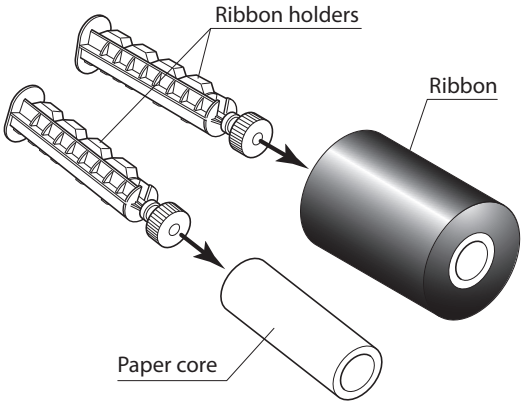

Setting the Ribbon

2. **Install the unused ribbon and holder in to the rear ribbon drive unit.**

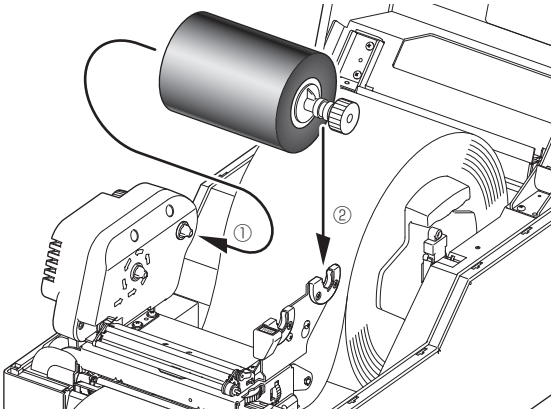

3. **Push the large blue-head open lever to release the head unit. Pull out the ribbon from the bottom of the head unit to the ribbon winding side.**

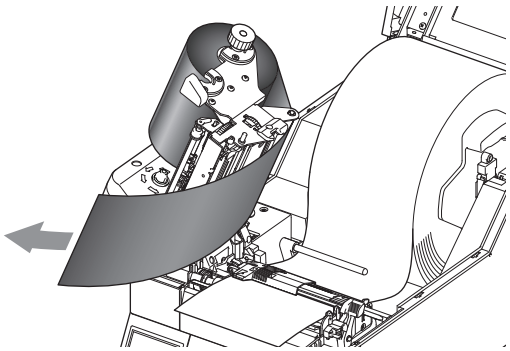

4. **Using the adhesive leader of the ribbon or some adhesive tape, fix the ribbon that you have pulled out on the ribbon holder on which the paper core has been set and wind it on the ribbon holder.**

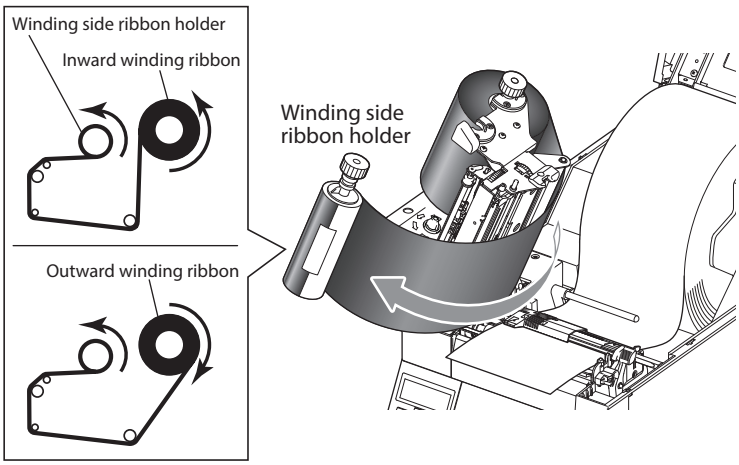

Setting the Ribbon

5. **Set the ribbon holder on which the paper core has been set in the ribbon drive unit, then rotate it in the direction shown by the arrow to remove slack and wrinkles from the ribbon.**

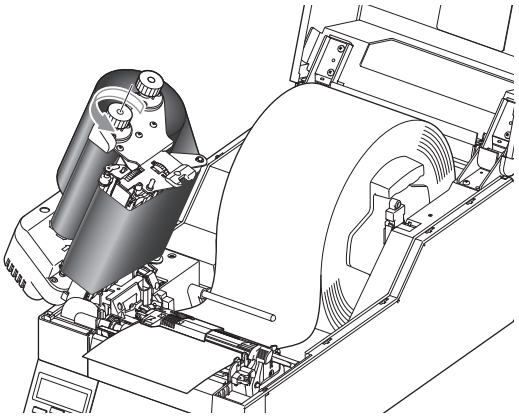

Ribbon Tension Adjustment (p.67)

Ribbon Balance Adjustment (p.69)

6. **Push the head close knob to lower and lock the head unit. Be sure to always push the head close knob to lock the head unit. If the ribbon is wrinkled, push the Feed key until the wrinkles disappear. If the wrinkles do not disappear or if it slips, perform ribbon balance adjustment and ribbon tension adjustment. See "Chapter 3 Printer Adjustments" for these adjustment methods.**

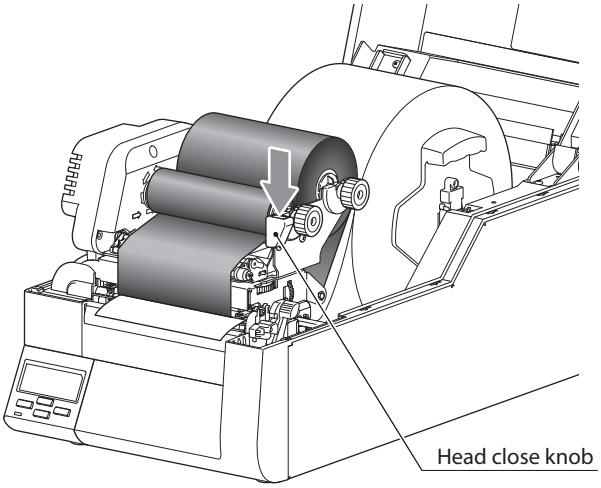

Operation panel (p.18)

Mode Settings

Turning on the power while pressing keys in the following combinations starts various functions.

Mode	Key operation
HEX dump mode	Turning power on while pushing the Stop key.
Self print mode	Turning power on while pushing the Feed key.
Menu list print mode and Menu setup mode	Turning power on while pushing the MENU key.

HEX Dump Mode

- **When using label media**
  Turn on printer power while pushing the Stop key. If the LED lights up and the LCD indicates "Hex Dump Mode" and "Label Media", release the Stop key, and then the printer enters HEX DUMP mode.
- **When using continuous media**
  Turn on printer power while pushing the Stop key. If the LED lights up and the LCD indicates "Hex Dump Mode" and "Label Media", and then changed to "Hex Dump Mode" and "Cont. Media", release the Stop key, and then the printer enters HEX dump mode.

```
DUMP LIST

02 40 30 31 30 30 0D 02 60 30 30 32 30 0D 02 4C  .M0100..c0020..L
44 31 31 0D 31 30 30 30 30 30 30 30 30 31 30  D11.100000000010
30 30 31 30 31 32 33 34 35 36 37 38 39 3A 3B 3C  0010123456789:;<
```

DUMP LIST

* To exit HEX Dump Mode, turn off the power to the printer then turn the power on again (restart).

Self Print Mode

Performing a self test print is an easy way to check on the state of printer setting and printing quality. Install the media as explained in "Installing the Media" and then operate the printer as follows.

Setting the Media (p.25)

- **When using label media**
  Turn on printer power while pushing the Feed key. When the LCD indicates "Self Print Mode" and "Label Media", release the Feed key. After it enters TEST MODE and media has fed, two labels print then printing stops.
  To restart printing, press the Feed key once more.

- **When using continuous media**
  Turn on printer power while pushing the Feed key. When the LCD indicates "Self Print Mode" and "Label Media", and then changed to "Self Print Mode" and "Cont. Media", release the Feed key. After it enters TEST MODE and it prints then printing stops.
  To restart printing, press the Feed key once more.

Media feed direction

Self print pattern

Media Adjustments

Using the Self Test Print shown above, you can make adjustments to the printer settings such as media width and media thickness (printhead pressure).The location of these two adjustments is explained in Chapter 3.

Media Thickness Adjustment (p.65)

The first sample, left, shows an incorrectly set "media thickness adjustment".
For standard label media, it is recommended you set the blue dial to the "1" position.

Media Width Adjustment (p.66)

The second sample, left, shows an incorrectly set "media width adjustment".
For 4-inch or 102mm wide media, the adjuster should be set to the "9" position on the blue dial.

Menu Setup Mode

If the MENU key is pressed while the printer is in the Ready state, the printer enters menu setup mode. In this mode, the printer's configuration can be changed using the operation panel. During menu setting mode, the LCD indicates the current menu settings and the key function.

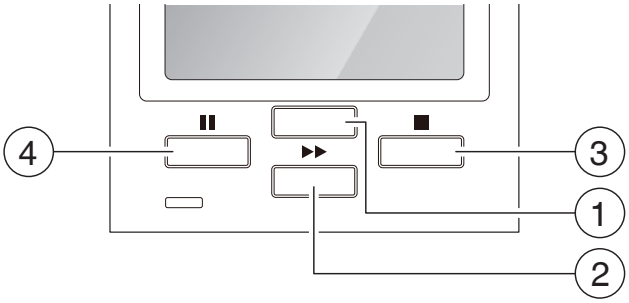

■ Functions of the keys

When you enter Menu Setup Mode, the LCD displays "Main Menu" on the top line and Page Setup below.
In the menu setup mode, the four keys become "cursor keys" to navigate the menu.

① **MENU key (Shift/Change):**
The MENU key goes up the menu system or selects a higher value

② **Feed key (Shift/Change):**
The Feed key (►►) goes down the menu system or selects a lower value

③ **Stop key (Enter/Save):**
The Stop key (■) selects or saves the item or enters a menu

④ **Pause key (Exit):**
The Pause key (❚❚) exits the current item (goes back) and eventually exits the menu system

The menu settings are stored temporarily in the printer's memory. They are only permanently stored in the printer setup when you exit the menu system and say "Yes" to the "Save Settings" question.

⚠ Caution

Turning the power off while the printer is performing the "Save Settings" function could cause a mis-save. Do not do this! If the power is accidentally turned off, first reset the printer to factory defaults.

Example of changing a menu

This is an explanation of the method of changing the set value of print darkness from "10" to "12" in a case where the main menu is "Page Setup" and the sub menu is "Print Darkness".

1. **Entering Menu Setup Mode.**
   Ensure LCD displays "Ready". Then press the MENU key to enter 'menu setup mode' where the printers settings can be changed or confirmed.

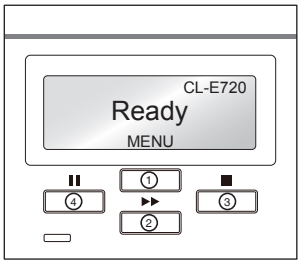

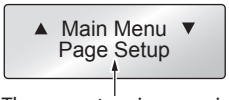

The current main menu is displayed.

The following are the functions of each key.
① MENU key: displays the previous menu item
② Feed key (▶▶): displays the next menu item
③ Stop key (■): enters the Page Setup menu
④ Pause key (❚❚): enters the Save Settings section

<Main menu item flow>

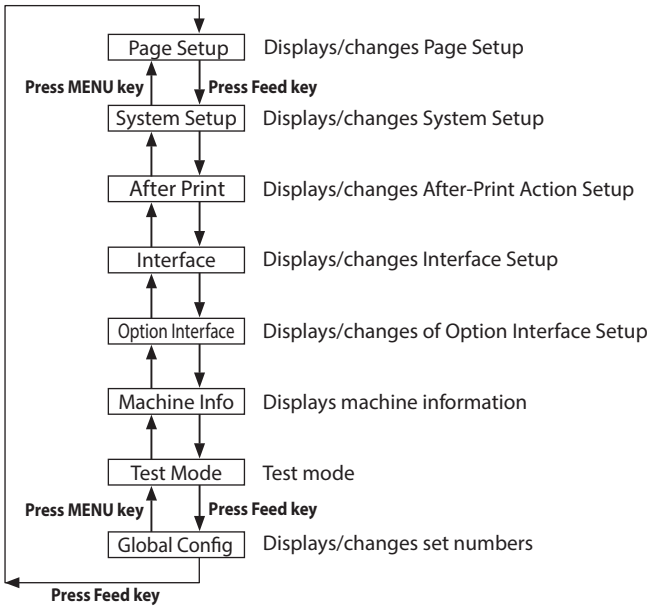

2. **Entering Sub menu.**
   Press the Stop key (■). The currently set item, "Print Speed", is displayed..

   ▲ Page Setup ▼
   Print Speed

   The following are the functions of each key.
   MENU key : displays the previous sub menu
   Feed key (▶▶) : displays the next sub menu
   Pause key (❚❚) : displays the values set by the selected sub menu
   Stop key (■) : returns to the main menu

3. **Selecting "Print Darkness" from the sub menu.**
   Press the Feed **key (▶▶) one time to display "Print Darkness". It is the second item within "Page Setup".**

   ▲ Page Setup ▼
   Print Darkness

4. **Displaying the set value of "Print Darkness".**
   Press the Stop key (■) and the value "10" - the currently set value - is displayed.

   ▲ Darkness ▼
   10

   The following are the functions of each key.
   MENU key : displays the higher value (11, in this case)
   Feed key (▶▶) : displays the lower value (9, in this case)
   Pause key (❚❚) : the current value is temporarily saved
   Stop key (■) : exits "Print Darkness" and ignores any value changes

5. **To change the value of Print Darkness to 12.**
   Press the MENU key two times to display "12" on the screen Then press the Stop key (■) to temporarily save the value into the printer RAM.

   ▲ Darkness ▼
   12

6. Save Changes to Settings.
Unless you save your settings, your changes will be lost when you turn off the printer.

To Save Changes

① Press the Pause (❚❚) key twice to display the message "Save Settings No-Discard".

▲ Save Settings ▼
No - Discard

② Press the MENU key or the Feed key (▶▶) to display the message "Save Settings Yes-Save".

▲ Save Settings ▼
Yes - Save

③ Press the Stop key (■).
The new settings will be saved and the printer will return to the "Ready" screen.

CL-E720
Ready
MENU

■ Changing the Interface and Emulation Settings
Changes to interface or emulation settings require a printer restart (or reboot) to take effect. The printer will offer to do this when needed by displaying the following message after saving the settings:

④ The screen shown on the right will be displayed when "Save Settings Yes-Save" is selected.

▲ Reboot System ▼
No

⑤ Press the MENU key or the Feed key (▶▶) to display the message "Reboot System Yes".
⑥ Press the Stop key (■) and reboot the printer.

▲ Reboot System ▼
Yes

To Discard Changes

① Press the Pause key (❚❚) twice to display the message "Save Settings No-Discard".

▲ Save Settings ▼
No - Discard

② Press the Stop key (■).
The printer will return to the "Ready" screen. The new settings will be lost when the printer is turned off.

CL-E720
Ready
MENU

Example of changing a menu (p.40)

Printing a List of Settings

You can get a list of the configuration settings in two ways:

- Press MENU key whilst turning the printer on. The LED lights up and "Print Settings" is displayed on the LCD. After printing, the printer will enter Menu Setup Mode.
- You can access the configuration print via the "Test Mode, Print Pattern, Current Config" from the setup menu.

Machine Information

Model Number	: CL-E720DT
Boot Version	: ****
ROM Version	: ********
ROM Date(DD//MM//YY)	: XX/XX/XX
ROMCheck Sum	: ****
FPGA Version	: ****
Head Check	: OK
* Print Counter	: 0001.234km
* Service Counter	: 0001.234km
Cut Counter	: 0
Sensor Monitor	: 1.50V
Option Interface	: None
MAC Address	: **.**.**.**.**.**

Current Menu Setting

[Global Config Menu]	
Config set	: 1
[PageSetup Menu]	
Print Speed	: 6 IPS
Print Darkness	: 10
Darkness Adjust	: 00
Continuous Media Length	: 4.00 inch
Vertical Position	: 0.00 inch
Horizontal Position	: 0.00 inch
Vertical Image Shift	: 0.00 inch
Auto Side Shift	: 0 dot
Media Sensor	: See Through
Small Media Adjustment	: Off
Small Media Length	: 1.00 inch
Symbol Set	: PM
[System Setup Menu]	
Sensor Level	: 1.7 V
Paper End Level	: 2.80 V
Error Reporting	: On Printing
Buzzer Select	: On
[Interface Menu]	
USB Device Class	: Printer
USB VCOM Protocol	: Auto
USB 2.0 High Speed	: On
IPv4 Address	: 169.254.001.010
IPv4 Subnet Mask	: 255.255.000.000
IPv4 Gateway	: 000.000.000.000
IPv4 DHCP	: On
IPv6	: On
[Option Interface Menu]	
RS-232C Baud rate	: 9600 bps
RS-232C Parity	: None
RS-232C Length	: 8 bit
RS-232C Stop bit	: 1 bit
RS-232C X-ON	: Yes

* If the double heat function is enabled, the value doubles. This function reduces print fading.To enable this function, configure the setting via Windows driver properties or LabelPrinterUtility. See the respective manual for how to configure the setting.

NOTE:

- Citizen continually enhances its printers with new options and settings based on our customer's requests. Extra or changed menu items may appear on the above print out in some cases.
- The set value of "Option Interface" is printed even if optional interface is not installed.

Global Configuration Sets

The printer can store three sets of configuration settings that can be recalled quickly and easily.
Each "Config Set" (1, 2 or 3) can contain completely different configuration settings for all menu parameters.
For example, "Config Set 1" could be configured for 6 ips print speed, print darkness 10."Config Set 2" next could be 5 ips continuous card media with black mark, print darkness 12.
The ability of having three sets of settings is ideal for someone who prints on different media types regularly, for example in a label printing bureau.
Global config settings can be printed using the "Test Mode, Print Pattern, Global Config" menu option. It will also display the currently active "Config Set":

Global Menu Settings

	Active Configuration Setting		
	Config 1	Config 2	Config 3
[PageSetup Menu]			
Print Speed	6	5	4
Print Darkness	10	12	12
Darkness Adjust	+00	+00	+00
Print Method	TT	TT	TT
Continuous Media Length	04.00inch	04.00inch	04.00inch
Vertical Position	+0.00inch	+0.00inch	+0.00inch
Horizontal Position	+0.00inch	+0.00inch	+0.00inch
Vertical Image Shift	+0.00inch	+0.00inch	+0.00inch
Auto Side Shift	00dots	00dots	00dots
Media Sensor	See Through	Reflect	See Through
Small Media Adjustment	Off	Off	Off
Small Media Length	1.00inch	1.00inch	1.00inch
Symbol Set	PM	PM	PM
[System Setup Menu]			
Sensor Level	1.7V	1.7V	1.7V
Paper End Level	2.80V	2.80V	2.80V
Error Reporting	On Printing	On Printing	On Printing
Buzzer Select	On	On	On
Metric/Inch	Inch	Inch	Inch
Max Media Length	10.00inch	10.00inch	10.00inch
Settings Lock	Off	Off	Off
Keyboard Lock	Off	Off	Off
LCD Standby	Off	Off	Off
Standby Timer	5 min	5 min	5 min
Control Code	STD	STD	STD
Emulation Select	DM4	DM4	DM4
[After Print Menu]			
AutoConfigure	On	On	On
Function		Tear	Tear

Menu Setting Table

Page Setup Menu - allows you to change settings related to the media or print quality.
System Setup Menu - allows you to change settings for the printer hardware and basic control systems.
After Print Menu - changes how the printer reacts after the label has been printed.
Interfaces - changes interface parameters such as baud rate.
Option Interfaces - communication settings of Option Interfaces.
Machine Information, Test Mode - allows you to check and/or print test pages and information about the printer.
Global Config menu - allows you to switch between 3 complete 'config sets' contained within the printer.

Press the MENU key in print possible status to enter MENU Setup Mode. Use the keys on the operation panel according to the LCD display to setup the printer. The contents that can be setup on the printer are shown below. And the items that are actually displayed on the LCD are shown in [ ].

■ For Datamax® Emulation

Top Menu	Sub Menu	Default	Menu	Remarks
Page Setup	Print Speed	6 IPS	2 to 8 IPS (CL-E720) 2 to 6 IPS (CL-E730)	Printing speed setting. (7 or 8 IPS only in Direct Thermal mode.) (CL-E720) (2 to 6 IPS with optional peeler.)
	Print Darkness	10	00 to 30	Adjusting print darkness.
	Darkness Adjust [Darkness Adj]	00	-10 to 10	Fine adjustment of darkness commands.
	Print Method	TT	TT DT	Selecting thermal transfer (ribbon) /direct thermal media.
	Continuous Media Length [Cont Media Len]	4.00 inch 101.6 mm	• CL-E720 0.25 to 158.00 inch 6.4 to 4013.2 mm • CL-E730 0.25 to 74.00 inch 6.4 to 1879.6 mm	Setting media length of continuous media. Lower level = during mm mode.
	Vertical Position [Vertical Pos]	0.00 inch 0.0 mm	-1.00 to 1.00 inch -25.4 to 25.4 mm	Adjusting printing start position.
	Horizontal Position [Horizontal Pos]	0.00 inch 0.0 mm	-1.00 to 1.00 inch -25.4 to 25.4 mm	Adjusting horizontal image position.
	Vertical Image Shift [Vertical Image]	0.00 inch 0.0 mm	0.00 to 32.00 inch 0.0 to 812.8 mm	Adjust the off set value in vertical when mapping data on a RAM.
	Auto Side Shift	00 dot	00 to 15 dots	Allows horizontal shifting of printing position by specified number of dots per page. Effective when load is applied to a specific head area, like vertical lines.
	Media Sensor	See Through	See Through Reflect None	Selecting media sensor.
	Small Media Adjustment [Small Media Adj]	Off	On Off	Setting for small media

Mode Settings
[Datamax® Emulation]

Top Menu	Sub Menu	Default	Menu	Remarks
Page Setup	Small Media Length [Small Media Len]	1.00 inch 25.4 mm	0.25 to 1.00 inch 6.4 to 25.4 mm	Setting media length for small media.
	Symbol Set	PM	50 symbols	Setting symbol set.
System Setup	Sensor Monitor	–	–	Displays level of sensor that is currently selected.
	Sensor Level	1.7V	0.0V to 3.3V	Selects threshold of the sensor.
	Paper End Level	3.00V	0.01 to 3.30V	Sets the paper end level.
	Error Reporting [Error Report]	On Printing	On Printing Immediate	Setting for error report.
	Buzzer Select	Exec/Err	Exec/Err All Error Key None	Setting buzzer sounding conditions.
	Metric/Inch [Metric/Inch Sel]	Inch	Inch mm	Sets the units.
	Max Media Length [Max Media Len]	10.00 inch 254.0 mm	• CL-E720 1.00 to 158.00 inch 25.4 to 4013.2 mm • CL-E730 1.00 to 74.00 inch 25.4 to 1879.6 mm	Sets the maximum media length.
	Settings Lock	Off	On Off	Prevents a command changing the set value.
	Keyboard Lock	Off	On Off	Prevents a change by a key operation. Hold down the Menu Key for at least 4 seconds to enter the Menu Setup Mode when setting the "On" menu.
	LCD Standby	Off	On Off	When the LCD Standby setting is turned ON, the LCD display will turn off in standby mode.
	Standby Timer	5min	1 to 99min	You can set the time it takes for the machine to go into Standby Mode.
	Control Code	STD	STD ALT ALT-2	Switches command mode of DMX mode.
	Emulation Select [Emulation Sel]	DM4	DM4 DMI DPP ZPI2	Selects DataMax®/Zebra® compatibility DM4: DataMax® 400 DMI: DataMax® IClass DPP: DataMax® Prodigy Plus® ZPI2: Zebra® ZPL2®
	Emulation Auto Detect [Emulation Auto]	Full Auto	On Off Full Auto	Selects the detection of Datamax® and Detect Off Zebra® emulation.

Mode Settings
[Datamax® Emulation]

Top Menu	Sub Menu	Default	Menu	Remarks
After Print	Auto Configure [Auto Config]	On	On Off	Automatically configures optional devices. On.....AutoConfigure enabled (Regardless of whether Function Select is set, if a peeler or cutter is installed, each mode is set automatically.) Off ....AutoConfigure disabled (A peeler of cutter is installed, but to not operate the peeler or cutter, turn it Off and the operation is selected by Function Select.)
	Function Select [Function Sel]	Tear	Off Tear Peel On * Cut On **	Selects the operation when the AutoConfigure is set to Off. Designates the paper position based on each option. The operation of this device is enabled during selection. At the same time, the parameters of the f command of Prodigy Plus are emulated for each optional device.
	Cutter Action **	Backfeed	Backfeed Through	Cutter operating method setting Backfeed: it feeds back after each cutting operation. Through: when the number copied = n, the back end of sheet 1 to n-1 passes through, and the back end of the final page that is a single sheet is copied and fed back.
	Peel Wait Delay *	0.1 sec	0.1 to 2.0 sec	Sets the Peel Wait Delay. Displays only machines with a peeler installed.
	Paper Position	0.00inch 0.00mm	When the function selection is set to "Off" (Printing start position (platen-centered)) 0.00 to 2.00 inch 0.0 to 50.8 mm When the function selection is set to "Tear/ Peal On/Cut On" (Tear position/Peal On position/Cut On position) -1.00 to 1.00 inch -25.4 to 25.4 mm	Adjusts the stop position. It is based on the inch/millimeter setting. There are initial values of the stop position for each device set by "Function Select", and later, relative values are set.
	Menu Key Action	Enters Menu	Repeat Last Set Repeat Last One Enters Menu	Sets the menu key action. Repeat Last Set: Repeats the number of copies. Repeat Last One: Last one is issued only for the final page. In the case of a count, afterwards, only last one is issued. Enters Menu: Enters the menu setup mode. Note: Hold down the MENU key for at least 4 seconds in order to enter the Menu Setup Mode when setting the "Repeat Last Set" or "Repeat Last One" menus.

* Only when peeling option is mounted.
** Only when cutter is mounted.

Mode Settings
[Datamax® Emulation]

Top Menu	Sub Menu	Default	Menu	Remarks
Interfaces	USB Device Class [USB Device Clas]	Printer	Printer VCOM	Selects the USB device class.
	USB VCOM Protocol [VCOM Protocol]	Auto	Auto DTR X-ON	Selects the protocol (flow control) when operating USB VCOM.
	USB 2.0 High Speed [USB Hi Speed]	On	On Off	Enable/disable setting of USB2.0 High Speed. When disabled, device runs at Full Speed.
	IPv4 Address	169.254.001.010	000.000.000.000 to 255.255.255.255	Set of IPv4 Network Address
	IPv4 Subnet Mask [IPv4 Subnet]	255.255.000.000	000.000.000.000 to 255.255.255.255	Set IPv4 Subnet Mask
	IPv4 Gateway	000.000.000.000	000.000.000.000 to 255.255.255.255	Set IPv4 Gateway
	IPv4 DHCP	On	On Off	IPv4 DHCP enable/disable setting
	IPv6	On	On Off	IPv6 enable/disable setting
Option Interfaces	RS-232C Baud	9600	115200 57600 38400 19200 9600 4800 2400	Setting the baud rate of the serial interface. • All settings related to the interface are enabled after the power is reconnected.
	RS-232C Parity	None	None Odd Even	Setting the communication parity for the serial interface
	RS-232C Length	8 bits	8 bits 7 bits	Setting the character length for the serial interface.
	RS-232C Stopbit	1 bit	1 bit 2 bits	Setting the stop bit for the serial interface.
	RS-232C X-ON	Yes	Yes No	Selectively setting the X-ON flow control of the serial interface.
	IEEE1284 *	On	On Off	Setting both direction of the Centro Interface.
	Web Monitor *	Auto	Auto On Off	Selecting the web monitor function.

* If the parallel board or multi-function LAN board is mounted.

Note: Settings related to interface are enabled after restart or after power is connected again.

Mode Settings
[Datamax® Emulation]

Top Menu	Sub Menu	Default	Menu	Remarks
Option Interfaces	Network Address **	–	000.000.000.000 to 255.255.255.255	Setting fixed IP address of the LAN board.
	Subnet Mask **	–	000.000.000.000 to 255.255.255.255	Setting fixed subnet mask value of the LAN board.
	Gateway Address **	–	000.000.000.000 to 255.255.255.255	Setting fixed default gateway address of the LAN board.
	BOOTP **	–	On Off	Setting the BOOTP of the LAN board.
	DHCP **	–	On Off	Setting the DHCP of the LAN board.
	WLAN Mode ***	–	Auto Ad-Hoc Infrastructure	Wireless LAN mode setting.
	WLAN Channel ***	–	01 to 14	Wireless LAN channel setting.
	WLAN SSID ***	–	Max. 32 characters	SSID setting of Wireless LAN.
	Bluetooth Security Setting [BT Security]	Medium	Medium High	Sets the security level of the Bluetooth interface. (Supported by Bluetooth model only)
	Bluetooth Connection Destination [BT Connection]	All Devices	All Devices Authenticated Devices	Sets the connection destination of the Bluetooth interface. (Supported by Bluetooth model only)
	Bluetooth Device Search [BT Discoverable]	On	On Off	Sets the connection destination of the Bluetooth interface. (Supported by Bluetooth model only)
	Bluetooth iOS Reconnect Request [BT ReConn]	On	On Off	Sets the reconnect request made to iOS by the Bluetooth interface. (Supported by Bluetooth model only)
	Bluetooth Connection Update [BT Renew]	–	Renew Discover Renew Pair Info Clear	When "Device Discovery" is selected, the printer transitions to the discoverable state, and when "Clear Connection Information" is selected, the saved pairing information is deleted and then the printer transitions to the discoverable state. *This has the same function as a switch on the Bluetooth interface board. (Supported by Bluetooth model only)
	Bluetooth PIN Code [BT PIN Code]	–	****	PIN code of the Bluetooth interface. The initial value is the last 4 digits of the 12-digit address. (Excludes :) (Supported by Bluetooth model only)
	Bluetooth Address [BT Adress]	–	**********	Address of the Bluetooth interface. (Excludes :) (Supported by Bluetooth model only)
	Bluetooth Device Name [BT Device Name]	–	CL-E720_**	Device name of the Bluetooth interface. (Supported by Bluetooth model only)
	Bluetooth Firmware Version [BT FW Version]	–	*****_*.**	Firmware version of the Bluetooth interface. (Supported by Bluetooth model only)
	Bluetooth Profile [BT Profile]	–	SPP, iAP	Profile of Bluetooth interface (Supported by Bluetooth model only)

*Displayed when the Web Monitor is operating.

Mode Settings
[Datamax® Emulation]

Top Menu	Sub Menu	Default	Menu	Remarks
Machine Information [Machine Info]	Model Number	–	CL-E***	Displays the model name.
	Boot Version	–	*.*	Displays the boot version
	ROM Version	–	********	Displays the ROM version.
	ROM Date	–	**/**/**	Displays the date the ROM was prepared.
	ROM CheckSum	–	****	Displays the check sum of the ROM
	FPGA Version	–	*.*	Displays the FPGA version
	Head Check	–	OK NG	Displays the results of the head check.
	Print Counter *	–	****.*** km	Displays the print counter.
	Service Counter *	–	****.*** km	Displays the service counter.
	Cut Counter	–	*******	Displays the cut count.
	Sensor Monitor	–	*.* V	Displays the sensor level.
	Option Interface [Option I/F]	–	None RS-232C LAN IEEE1284 Bluetooth	Displays the presence/absence of the optional interface. • If Dip Switch 1 is ON in RS-232C interface, RS-232C (DIP SW) will be displayed. (See "Interface" in the section of Appendix)
	RS-232C Baud	–	–	If Dip Switch 1 is ON in RS-232C interface, the communication condition set in Dip Switch will be displayed.
	RS-232C Parity	–	–	
	RS-232C Length	–	–	
	RS-232C Stop bit	–	–	
	RS-232C X-ON	–	–	
	MAC Address	–	–	Displays MAC Address
Test Mode	Print Pattern	Current Config	Current Config Global Config Sample	Executes the test pattern.
	Head Check	No	Yes No	Executes head check.
	Factory Default	No	Yes No	Initializes the set values of the configuration set to the state when the unit was shipped from the factory.
	Hex Dump	No	Yes No	Sets the hex dump mode.
	Serial Monitor	–	–	Displays the state of the serial interface.
	Auto Calibration [Auto Cal]	See Through	See Through Reflect	Executes the calibration of the sensor.
	Sensor Monitor	See Through	See Through Reflect	Displays the level of the sensor.
Global configuration [Global Config]	–	Config Set 1	Config Set 1 Config Set 2 Config Set 3	Sets the Config Set.

* If the double heat function is enabled, the value doubles. This function reduces print fading.To enable this function, configure the setting via Windows driver properties or LabelPrinterUtility. See the respective manual for how to configure the setting.
** If the multi-function LAN board is mounted, or during web monitor function.
*** When the multi-function wireless LAN board is available and when Web monitor is operating.
Note: Settings related to interface are enabled after restart or after power is connected again.
Note: To restore factory default settings, turn on printer power while pushing the Feed and Pause keys simultaneously, then press the MENU key and the Stop key sequentially.

Mode Settings

■ For Zebra® Emulation

Top Menu	Sub Menu	Default	Menu	Remarks
Page Setup	Print Speed	6 IPS	2 to 8 IPS (CL-E720) 2 to 6 IPS (CL-E730)	Printing speed setting. (7 or 8 IPS only in Direct Thermal mode.) (CL-E720) (2 to 6 IPS with optional peeler.)
	Print Darkness	10	00 to 30	Adjusting print darkness.
	Darkness Adjust [Darkness Adj]	00	-10 to 10	Fine adjustment of darkness commands.
	Print Method	TT	TT DT	Selecting thermal transfer (ribbon) /direct thermal media.
	Continuous Media Length [Cont Media Len]	4.00 inch 101.6 mm	• CL-E720 0.25 to 158.00 inch 6.4 to 4013.2 mm • CL-E730 0.25 to 74.00 inch 6.4 to 1879.6 mm	Setting media length of continuous media. Lower level = during mm mode.
	Vertical Position [Vertical Pos]	0.00 inch 0.0 mm	-1.00 to 1.00 inch -25.4 to 25.4 mm	Adjusting printing start position.
	Horizontal Position [Horizontal Pos]	0.00 inch 0.0 mm	-1.00 to 1.00 inch -25.4 to 25.4 mm	Adjusting horizontal image position.
	Vertical Image Shift [Vertical Image]	000 dots	-120 to 120 dots	Adjust the off set value in vertical when mapping data on a RAM.
	Auto Side Shift	00 dot	00 to 15 dots	Allows horizontal shifting of printing position by specified number of dots per page. Effective when load is applied to a specific head area, like vertical lines.
	Media Sensor	See Through	See Through Reflect Non	Selecting media sensor.
	Small Media Adjustment [Small Media Adj]	Off	On Off	Setting for small media
	Small Media Length [Small Media Len]	1.00 inch 25.4 mm	0.25 to 1.00 inch 6.4 to 25.4 mm	Setting media length for small media.
	Symbol Set	PM	50 symbols	Setting symbol set.
System Setup	Sensor Monitor	–	–	Displays level of sensor that is currently selected.
	Sensor Level	1.7V	0.0V to 3.3V	Selects threshold of the sensor.
	Paper End Level	3.00V	0.01 to 3.30V	Sets the paper end level.
	Error Reporting [Error Report]	On Printing	On Printing Immediate	Setting for error report.
	Buzzer Select	Exec/Err	Exec/Err All Error Key None	Setting buzzer sounding conditions.
	Metric/Inch [Metric/Inch Sel]	Inch	Inch mm	Sets the units.

Mode Settings
[Zebra® Emulation]

Top Menu	Sub Menu	Default	Menu	Remarks
System Setup	Max Media Length [Max Media Len]	10.00 inch 254.0 mm	• CL-E720 1.00 to 158.00 inch 25.4 to 4013.2 mm • CL-E730 1.00 to 74.00 inch 25.4 to 1879.6 mm	Sets the maximum media length.
	Settings Lock	Off	On Off	Prevents a command changing the set value.
	Keyboard Lock	Off	On Off	Prevents a change by a key operation. Hold down the Menu Key for at least 4 seconds to enter the Menu Setup Mode when setting the "On" menu.
	LCD Standby	Off	On Off	When the LCD Standby setting is turned ON, the LCD display will turn off in standby mode.
	Standby Timer	5min	1 to 99min	You can set the time it takes for the machine to go into Standby Mode.
	Media Power Up	Off	On Off	Selects whether or not to initiate media measurement when the power in ON.
	CI Lock	Off	On Off	Activates/deactivates the CI command.
	Emulation Select [Emulation Sel]	ZPI2	DM4 DMI DPP ZPI2	Selects DataMax®/Zebra® compatibility DM4: DataMax® 400 DMI: DataMax® IClass DPP: DataMax® Prodigy Plus® ZPI2: Zebra® ZPL2®
	Emulation Auto Detect [Emulation Auto]	Full Auto	On Off Full Auto	Selects the detection of Datamax® and Detect Off Zebra® emulation.
After Print	Auto Configure [Auto Config]	On	On Off	Automatically configures optional devices. On.....AutoConfigure enabled (Regardless of whether Function Select is set, if a peeler or cutter is installed, each mode is set automatically.) Off ....AutoConfigure disabled (A peeler of cutter is installed, but to not operate the peeler or cutter, turn it Off and the operation is selected by Function Select.)
	Function Select [Function Sel]	Tear	Off Tear Peel On* Cut On**	Selects the operation when the AutoConfigure is set to Off. Designates the paper position based on each option. The operation of this device is enabled during selection. At the same time, the parameters of the f command of Prodigy Plus are emulated for each optional device.

* Only when peeling option is mounted.
** Only when cutter is mounted.

Mode Settings
[Zebra® Emulation]

Top Menu	Sub Menu	Default	Menu	Remarks
After Print	Cutter Action **	Backfeed	Backfeed Through	Sets the cutter action. With the optional AutoConfigure On, printing is executed only when the cutter is installed or only when Cut is selected by Function Select. Backfeed is always set after cutting. Through is set at the rear end of sheets 1 to n-1 when the number of copies = n, and the rear end of the final page of single sheet and the copy is backfeed.
	Peel Wait Delay *	0.1 sec	0.1 to 2.0 sec	Sets the Peel Wait Delay. Displays only machines with a peeler installed.
	Paper Position	0.00 inch 0.0 mm	When the function selection is set to "Off" (Printing start position (platen-centered)) 0.00 to 2.00 inch 0.0 to 50.8 mm When the function selection is set to "Tear/Peal On/Cut On" (Tear position/Peal On position/Cut On position) -1.00 to 1.00 inch -25.4 to 25.4 mm	Adjusts the stop position. It is based on the inch/millimeter setting. There are initial values of the stop position for each device set by "Function Select", and later, relative values are set.
	Menu Key Action	Enters Menu	Repeat Last One Enters Menu	Sets the menu key action. Repeat Last One: Last one is issued only for the final page. In the case of a count, afterwards, only last one is issued. Enters Menu: Enters the menu setup mode. Note: Hold down the MENU key for at least 4 seconds in order to enter the Menu Setup Mode when setting the "Repeat Last One" menu.
Interfaces	USB Device Class [USB Device Clas]	Printer	Printer VCOM	Selects the USB device class.
	USB VCOM Protocol [VCOM Protocol]	Auto	Auto DTR X-ON	Selects the protocol (flow control) when operating USB VCOM.
	USB 2.0 High Speed [USB Hi Speed]	On	On Off	Enable/disable setting of USB2.0 High Speed. When disabled, device runs at Full Speed.
	IPv4 Address	169.254.001.010	000.000.000.000 to 255.255.255.255	Set of IPv4 Network Address
	IPv4 Subnet Mask [IPv4 Subnet]	255.255.000.000	000.000.000.000 to 255.255.255.255	Set IPv4 Subnet Mask
	IPv4 Gateway	000.000.000.000	000.000.000.000 to 255.255.255.255	Set IPv4 Gateway
	IPv4 DHCP	On	On Off	IPv4 DHCP enable/disable setting
	IPv6	On	On Off	IPv6 enable/disable setting

* Only when peeling option is mounted.
** Only when cutter is mounted.

Mode Settings
[Zebra® Emulation]

Top Menu	Sub Menu	Default	Menu	Remarks
Option Interfaces	RS-232C Baud	9600	115200 57600 38400 19200 9600 4800 2400	Setting the baud rate of the serial interface. • All settings related to the interface are enabled after the power is reconnected.
	RS-232C Parity	None	None Odd Even	Setting the communication parity for the serial interface.
	RS-232C Length	8 bits	8 bits 7 bits	Setting the character length for the serial interface.
	RS-232C Stopbit	1 bit	1 bit 2 bits	Setting the stop bit for the serial interface.
	RS-232C X-ON	Yes	Yes No	Selectively setting the X-ON flow control of the serial interface.
	IEEE1284 *	On	On Off	Setting both direction of the Centro Interface.
	Web Monitor *	Auto	Auto On Off	Selecting the web monitor function.
	Network Address **	–	000.000.000.000 to 255.255.255.255	Setting fixed IP address of the LAN board.
	Subnet Mask **	–	000.000.000.000 to 255.255.255.255	Setting fixed subnet mask value of the LAN board.
	Gateway Address **	–	000.000.000.000 to 255.255.255.255	Setting fixed default gateway address of the LAN board.
	BOOTP **	–	On Off	Setting the BOOTP of the LAN board.
	DHCP **	–	On Off	Setting the DHCP of the LAN board.
	WLAN Mode ***	–	Auto Ad-Hoc Infrastructure	Wireless LAN mode setting.
	WLAN Channel ***	–	01 to 14	Wireless LAN channel setting.
	WLAN SSID ***	–	Max. 32 characters	SSID setting of Wireless LAN.

* If the parallel board or multi-function LAN board is mounted.
** If the multi-function LAN board is mounted, or during web monitor function.
***When the multi-function wireless LAN board is available and when Web monitor is operating.

Note: Settings related to interface are enabled after restart or after power is connected again.

Mode Settings
[Zebra® Emulation]

Top Menu	Sub Menu	Default	Menu	Remarks
Option Interfaces	Bluetooth Security Setting [BT Security]	Medium	Medium High	Sets the security level of the Bluetooth interface. (Supported by Bluetooth model only)
	Bluetooth Connection Destination [BT Connection]	All Devices	All Devices Authenticated Devices	Sets the connection destination of the Bluetooth interface. (Supported by Bluetooth model only)
	Bluetooth Device Search [BT Discoverable]	On	On Off	Sets the connection destination of the Bluetooth interface. (Supported by Bluetooth model only)
	Bluetooth iOS Reconnect Request [BT ReConn]	On	On Off	Sets the reconnect request made to iOS by the Bluetooth interface. (Supported by Bluetooth model only)
	Bluetooth Connection Update [BT Renew]	–	Renew Discover Renew Pair Info Clear	When "Device Discovery" is selected, the printer transitions to the discoverable state, and when "Clear Connection Information" is selected, the saved pairing information is deleted and then the printer transitions to the discoverable state. *This has the same function as a switch on the Bluetooth interface board. (Supported by Bluetooth model only)
	Bluetooth PIN Code [BT PIN Code]	–	****	PIN code of the Bluetooth interface. The initial value is the last 4 digits of the 12-digit address. (Excludes :) (Supported by Bluetooth model only)
	Bluetooth Address [BT Adress]	–	**********	Address of the Bluetooth interface. (Excludes :) (Supported by Bluetooth model only)
	Bluetooth Device Name [BT Device Name]	–	CL-E720_**	Device name of the Bluetooth interface. (Supported by Bluetooth model only)
	Bluetooth Firmware Version [BT FW Version]	–	*****_*.**	Firmware version of the Bluetooth interface. (Supported by Bluetooth model only)
	Bluetooth Profile [BT Profile]	–	SPP, iAP	Profile of Bluetooth interface (Supported by Bluetooth model only)

*Displayed when the Web Monitor is operating.

Mode Settings
[Zebra® Emulation]

Top Menu	Sub Menu	Default	Menu	Remarks
Machine Information [Machine Info]	Model Number	–	CL-E***	Displays the model name.
	Boot Version	–	*.*	Displays the boot version
	ROM Version	–	********	Displays the ROM version.
	ROM Date	–	**/**/**	Displays the date the ROM was prepared.
	ROM CheckSum	–	****	Displays the check sum of the ROM
	FPGA Version	–	*.*	Displays the FPGA version
	Head Check	–	OK NG	Displays the results of the head check.
	Print Counter *	–	****.*** km	Displays the print counter.
	Service Counter *	–	****.*** km	Displays the service counter.
	Cut Counter	–	*******	Displays the cut count.
	Sensor Monitor	–	*.* V	Displays the sensor level.
	Option Interface [Option I/F]	–	None RS-232C LAN IEEE1284 Bluetooth	Displays the presence/absence of the optional interface. • If Dip Switch 1 is ON in RS-232C interface, RS-232C (DIP SW) will be displayed. (See "Interface" in the section of Appendix)
	RS-232C Baud	–	–	If Dip Switch 1 is ON in RS-232C interface, the communication condition set in Dip Switch will be displayed.
	RS-232C Parity	–	–	
	RS-232C Length	–	–	
	RS-232C Stop bit	–	–	
	RS-232C X-ON	–	–	
	MAC Address	–	–	Displays MAC Address
Test Mode	Print Pattern	Current Config	Current Config Global Config Sample	Executes the test pattern.
	Head Check	No	Yes No	Executes head check.
	Factory Default	No	Yes No	Initializes the set values of the configuration set to the state when the unit was shipped from the factory.
	Hex Dump	No	Yes No	Sets the hex dump mode.
	Serial Monitor	–	–	Displays the state of the serial interface.
	Auto Calibration [Auto Cal]	See Through	See Through Reflect	Executes the calibration of the sensor.
	Sensor Monitor	See Through	See Through Reflect	Displays the level of the sensor.
Global configuration [Global Config]	–	Config Set 1	Config Set 1 Config Set 2 Config Set 3	Sets the Config Set.

* If the double heat function is enabled, the value doubles. This function reduces print fading.To enable this function, configure the setting via Windows driver properties or LabelPrinterUtility. See the respective manual for how to configure the setting.

Note: To restore factory default settings, turn on printer power while pushing the Feed and Pause keys simultaneously, then press the MENU key and the Stop key sequentially.

Menu Setup Mode (p.39)

Quick Setup of the Print Method

The print method (thermal transfer method/direct thermal method) can be set using operation panel in addition to Menu Setup mode.

⚠ Caution

Be sure to always shut off the operation of print before changing a setting. You cannot change a setting during printing (including pause).

Setting method

Keep the Feed key held down. Each time the Pause key is pushed, the printer switches between thermal transfer mode and direct thermal mode.

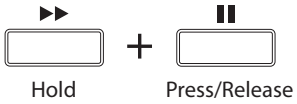

- If thermal transfer is selected, the buzzer sounds once and the LCD briefly displays "Print Method, TT" before returning Ready status.
- If direct thermal is selected, the buzzer sounds twice and the LCD briefly displays "Print Method, DT" before returning Ready status.

Note: Changes will remain in effect even after the power is turned off.

Menu Setting Table (p.45)

Emulation Auto Detect: Cross-Emulation™

If a control language different from the emulation when operating with the Emulation Auto Detect setting in System Setup set to "On" or "Full Auto" is received, the emulation is automatically switched.

When the Emulation Auto Detect setting is set to "Full Auto"
When a different control language is detected, operation is continued with the emulation of the received control language. The new emulation setting will be saved, but the printer will not automatically restart.
If the printer is manually restarted later on, it will start up with the newly saved emulation setting.

When the Emulation Auto Detect setting is set to "On"
The following message is displayed on the LCD when the Zebra® emulation (ZPI2) command is detected during Datamax® emulation.

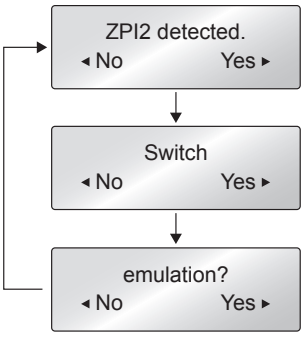

By selecting "Yes" the printer will reboot and automatically switch to ZPI2 emulation. The printer will return to the Ready status if "No" is selected.

The following message is displayed in the LCD when the Datamax® command is detected during Zebra® emulation.

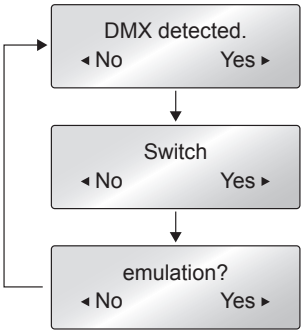

By selecting "Yes" the printer will reboot and automatically switch to Datamax® emulation (DM4/DMI/DPP). The printer will return to the Ready status if "No" is selected.

Emulation Auto Detect: Cross-Emulation™

Note:
- The Emulation Auto-Detection function will not work if the "Emulation Auto Detect" command in the Sub Menu in the "System Setup" in the Top Menu is set to "Off ". (The command is set to "On" when shipped from the factory)
- After the Emulation Auto-Detection function is activated, this function will not work unless the printer is turned Off and then turned On again.

Sensor Adjustments

The sensing level of the label detection sensor (transparent sensor), black mark detection sensor (reflective sensor), and continuous media detection sensor (reflective sensor) are adjusted separately and independently. Firstly, the sensor type must be selected either using the VuePrint menu system or the Sensor Method Selection shown below. Then the adjustment and calibration of the sensor can be made.

Entering Sensor Adjustment Mode

1. **Turn on the power while pushing the Pause key, Menu key, and Stop key simultaneously.**

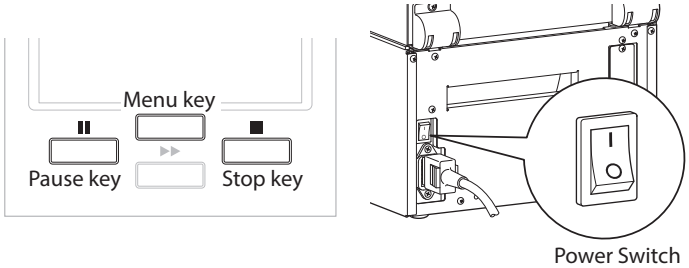

2. **After "Sensor Cal Mode" lights up, release the keys to change the printer to sensor adjustment setting mode.**

Ribbon guide adjustment (p.71)

Sensor Cal Mode
See Through

Sensor Selection Method

To switch from transparent to reflective sensor, hold down the Feed key and then press the Stop key. Each time the key is pressed, a buzzer sounds and the setting switches between the label detection sensor (transparent sensor) and the black mark detection sensor (reflective sensor). If the key is pressed for at least 4 seconds, the setting switches to the continuous media detection sensor (reflective sensor).

Sensor Cal Mode
See Through

When the label detection sensor (transparent sensor) is selected, the buzzer sounds once, and "See Through" is displayed.
When the black mark sensor (reflective sensor) is selected, the buzzer sounds twice, and "Reflect" is displayed.
When the continuous media detection sensor (reflective sensor) is selected, the buzzer sounds thrice, and "None" is displayed.

Ribbon guide adjustment (p.71)
Sensor Selection Method (p.60)

Adjusting the label detection sensor (Transparent sensor)

1. **The label detection sensor (Transparent sensor) is selected.**
2. **Install only the liner media (label backing paper) with the label media removed so that it will pass between the platen roller and the media sensor. (Be careful that media with black marks does not pass the media sensor.)**

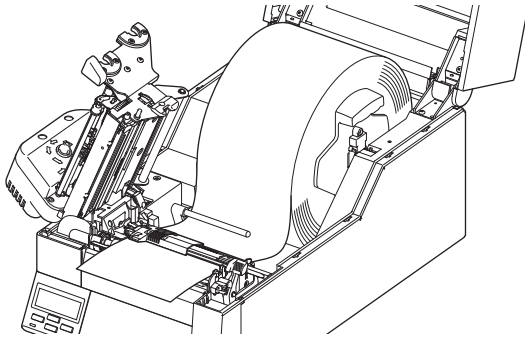

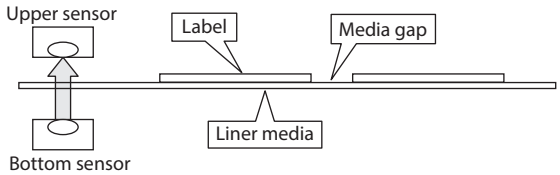

3. **If the Pause key is pressed then released while the Feed key is continually pressed, the sensor is automatically adjusted.**

4. **When automatic adjustment stops normally, "Succeeded" is displayed by the LCD. If it stops abnormally (adjustment is impossible), the LED lights up red and "Failed" is displayed on the LCD.**

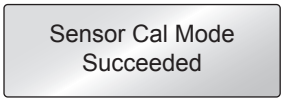

5. **To save the setting, push the STOP key.**
   The buzzer sounds once and the printer restarts.

Ribbon guide adjustment (p.71)

Sensor Selection Method (p.60)

Adjusting the black mark detection sensor (Reflective sensor)

1. **The black mark detection sensor (Reflective sensor) is selected.**
2. **With the reflective sensor selected, install the label media so that it is between the platen roller and the media sensor. Be careful that black mark and media gap do not pass the media sensor.**

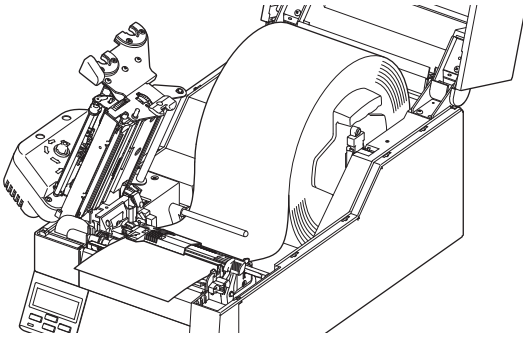

■ **When using continuous media or label media with no gaps**

Mount in such a way that the part without a black mark (in the case of label media, this means the label paper portion) faces the platen roller and the media sensor.

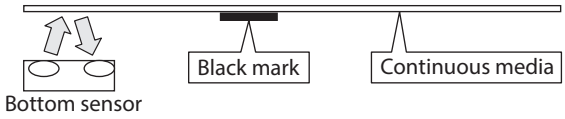

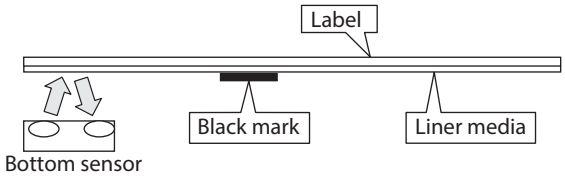

■ **When using label media with gaps**

Only mount label media with peeled-off liner (glassine paper) so that it faces the platen roller and media sensor. Avoid contact with black mark.

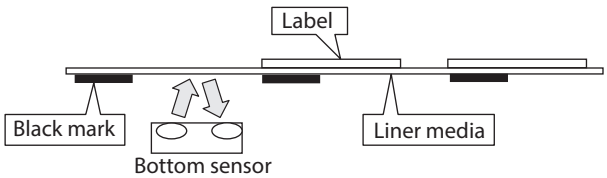

Sensor Adjustments

3. **If the Pause Key is pressed then released while the Feed key is continually pressed, the sensor is automatically adjusted.**

4. **When automatic adjustment stops normally, "Succeeded" is displayed by the LCD. If it stops abnormally (adjustment is impossible), the LED lights up red and "Failed" is displayed on the LCD.**

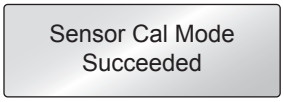

5. **To save the setting, push the STOP key.**
   The buzzer sounds once and the printer restarts.

Ribbon guide adjustment (p.71)

Sensor Selection Method (p.60)

Adjusting the continuous media detection sensor (Reflective sensor)

1. **The continuous media detection sensor (reflective sensor) is selected.**
2. **Install the media so that it will pass between the platen roller and the media sensor, and lock the head unit. (Be careful that media with black marks do not pass the media sensor.)**

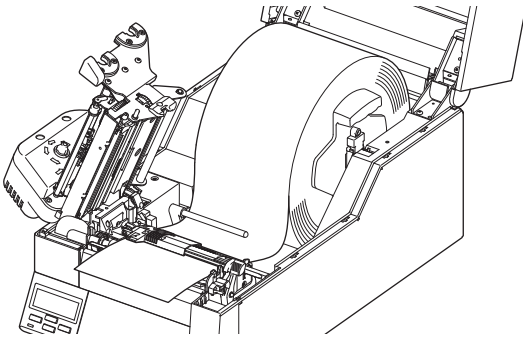

3. **If the Pause key is pressed then released while the Feed key is continually pressed, the sensor is automatically adjusted.**

Sensor Cal Mode
Executing

4. **When automatic adjustment stops normally, "Succeeded" is displayed by the LCD. If it stops abnormally (adjustment is impossible), the LED lights up red and "Failed" is displayed on the LCD.**

Sensor Cal Mode
Succeeded

5. **To save the setting, push the STOP key.**
   The buzzer sounds once and the printer restarts.

Media Thickness Adjustment

It may be necessary to adjust the printer according to the thickness of the media being used. This can be done easily by rotating the media adjustment dial to improve the print quality.

- Poor print quality across the complete printout means wrongly set media thickness. See this section.
- Poor print quality on one side of a printout means wrongly set media width. See next section.

Self Print Mode (p.38)

Refer to the following table; adjust while performing test printing by turning the dial from the smallest number on the dial to the largest number on the dial one step at a time.

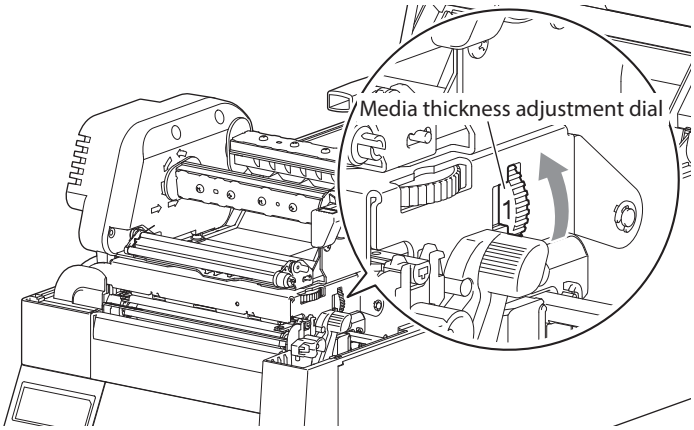

Media Thickness Dial Position	Suggested media type
0	Direct thermal media (thin media)
1-2	Standard Label media, Direct thermal media
3-5	Thicker media such as synthetic paper, premium grade paper and art paper
6-9	Thick media such as thermal paper (cardboard), cards and tags

These values are guidelines. The exact media being used must be matched with the correct media thickness adjustment position.

- When shipped from the factory, it is set at dial 1 or 2.
  (The factory default setting is indicated on the adjustment gauge label.)
- The offset adjustment varies according to the thickness and the hardness of the media.
- Dial adjustment may be required depending on the thickness of print and occurrence of ribbon wrinkles.

Media Width Adjustment

Ribbon guide adjustment (p.71)

Self Print Mode (p.38)

The head pressure varies according to the width of the media being printed.
The head pressure balance must be adjusted according to media width so that constant head pressure is applied to the head. With this printer, it can be adjusted easily by turning the media width adjustment dial.
If the printing is blurred or lightly printed on one side or the media moves in a zigzag pattern adjust the head pressure balance.
After making an adjustment, confirm the output quality with a test print.

⚠ Caution

When using narrow media, be sure to MAKE this adjustment. (If you do not, the head may be damaged by jamming, etc.)

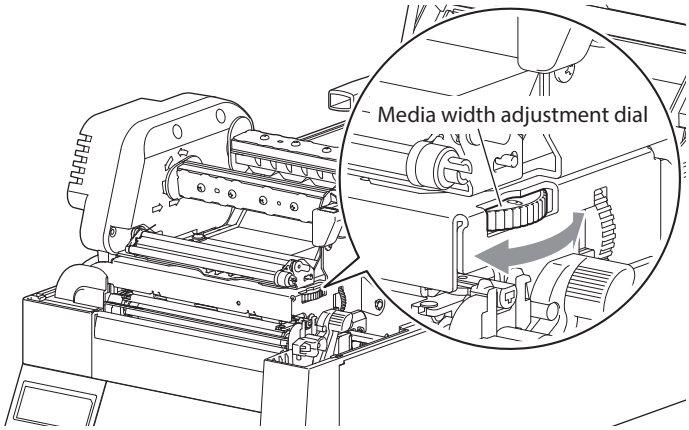

Dial position	Media width mm (inches)	Head pressure
0	19.5 to 23.0 mm (0.77 to 0.90)	Low ↑
1	23.0 to 30.0 mm (0.90 to 1.18)	
2	30.0 to 39.0 mm (1.18 to 1.53)	
3	39.0 to 49.0 mm (1.53 to 1.92)	
4	49.0 to 62.0 mm (1.92 to 2.44)	
5	62.0 to 76.0 mm (2.44 to 2.99)	
6	76.0 to 88.0 mm (2.99 to 3.46)	
7	88.0 to 99.0 mm (3.46 to 3.89)	
8	99.0 to 108 mm (3.89 to 4.25)	↓ High
9	108 to 118 mm (4.25 to 4.65) (setting when shipped)	

The following values are criteria.

- Dial adjustment may be required depending on the thickness of print and occurrence of ribbon wrinkles.

Setting the Ribbon (p.34)

Adjusting the Ribbon

If the width of the ribbon changes, a constant pressure will be applied on the guide roller etc. Therefore, it is required to adjust the tension or balance according to the ribbon width.
If the ribbon wrinkles or slips, adjust the tension and balance.

Ribbon Tension Adjustment

The adjustment of the ribbon tension can be done in 5 steps in the feeding side (rear side), 3 steps in the winding side (front side), and in 15 different ways.

1. Adjustment in the winding side (front side)

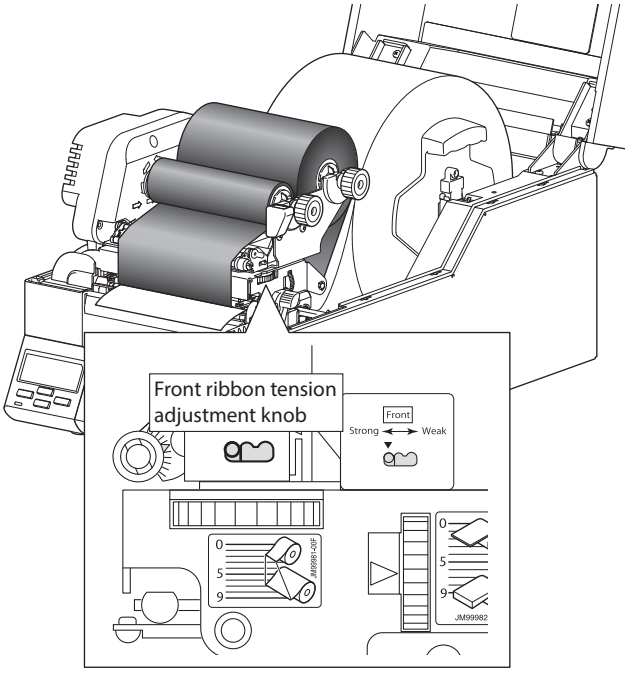

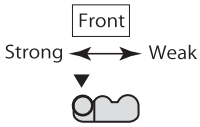

Slide the front ribbon tension adjustment knob to make adjustments.

Adjustment criteria

Ribbon width	Front (winding side) ribbon tension adjustment knob
4 inches	Strong
3 inches	Medium
2 inches	Weak

Adjusting the Ribbon

2. Adjustment in the feeding side (rear side)

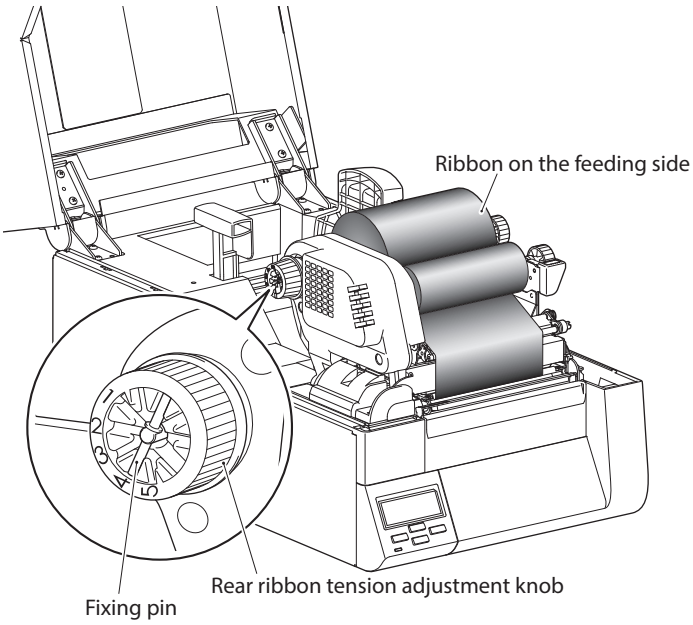

① Press and turn the rear ribbon tension adjustment knob while the ribbon on the feeding side is fixed.
② Refer to the table given below and fix by aligning the scale of rear ribbon tension adjustment knob to the fixing pin.

Adjustment criteria

Adjustment knob	Ribbon width	Back feed volume (max)
5	For adjustment	80 mm
4	4 inch (setting when shipped)	80 mm
3	3 inch	80 mm
2	2 inch	Less than 80mm
1	1 inch-19 mm	Less than 50mm

3. Confirmation of printing after adjustment

Self Print Mode (p.38)

Carry out test printing in Self Print Mode and make adjustment whenever the following conditions occur.

- Wrinkles in the ribbon: Increase the tension
- Ribbon slips (Dirt comes out): Reduce the tension

After adjustment, perform a test printing again and confirm that there are no wrinkles on the ribbon.

Self Print Mode (p.38)

Ribbon Balance Adjustment

Do this adjustment by turning the front ribbon left-right balance adjustment knob. If the ribbon is wrinkled, adjust it as follows. The scale is usually aligned with the center.

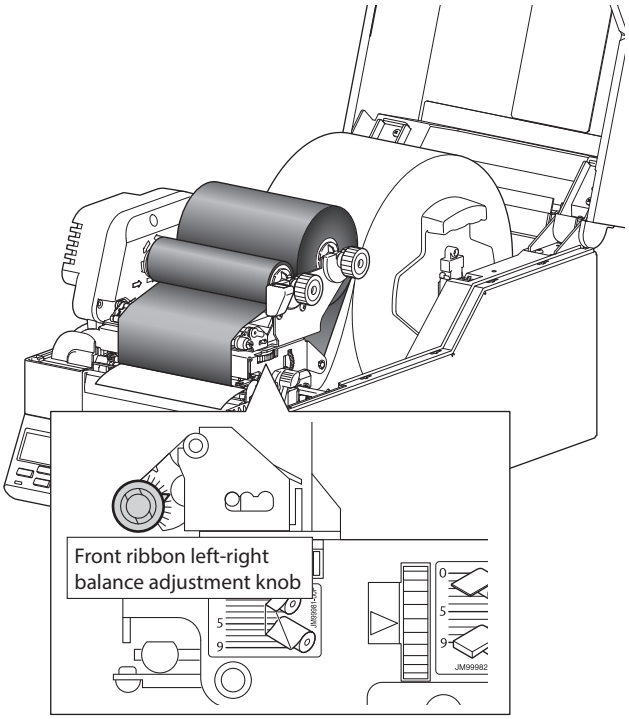

1. **Look at the ribbon from font side and check on which side (adjustment knob side /the side opposite to the adjustment knob) loose is present between the ribbon on the feeding side and ribbon guide shaft on the back side.**

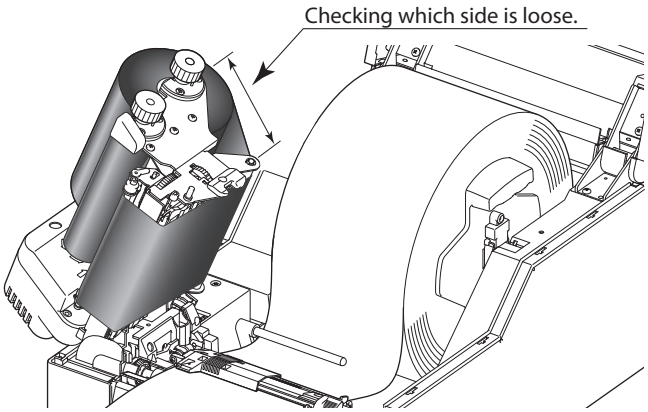

Adjusting the Ribbon

2. Make adjustment according to the position at which looses occur in the ribbon, by using the following procedure.

■ In case of looseness on the side opposite the adjustment knob
Turn the front adjustment knob to the left to remove the looseness, then make a test print to ensure that the ribbon is not wrinkled.
If wrinkles occur, adjust the back (feeding side) ribbon guide adjustment cam also. Carry out the ribbon guide adjustment by referring to the next page.

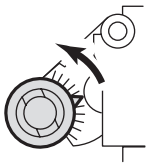

Front balance adjustment knob

■ In case of looseness on the ribbon guide shaft
Turn the front adjustment knob to the right to remove the looseness, then make a test print to ensure that the ribbon is not wrinkled.
If wrinkles occur, adjust the back (feeding side) ribbon guide adjustment cam also. Carry out the ribbon guide adjustment by referring to the next page.

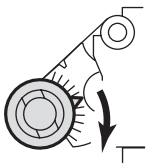

Front balance adjustment knob

Ribbon guide adjustment

Prevent occurrence of wrinkles on the ribbon by adjusting the inclination of ribbon guide at the rear side (feeding side).
If looses occur in the feeding side ribbon, adjust by using the following procedure. Align the position of the scale to the center.

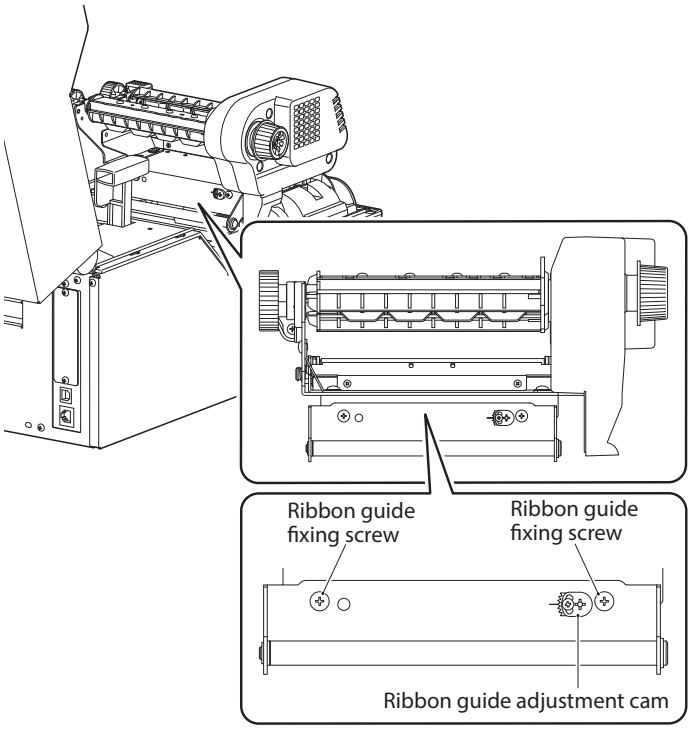

1. **Loosen the ribbon guide fixing screws (2 places).**
2. **Loosen the screw on the ribbon guide adjusting cam.**
3. **Change the inclination of the ribbon guide by sliding the ribbon guide adjustment cam.**

■ **When ribbon loosing occurs on the side opposite to the front ribbon left-right balance adjustment knob side**

Raise the ribbon guide adjustment cam and increase the inclination of the ribbon guide shaft of the side where there is no loose in the ribbon (adjustment knob side).

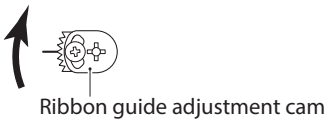

Adjusting the Ribbon

■ **When ribbon loosing occurs in the front ribbon left-right balance adjustment knob side**

Lower the ribbon guide adjustment cam and increase the inclination of the ribbon guide shaft of the side where there is no loose in the ribbon (adjustment knob side).

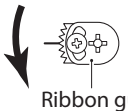

4. **Once the angle is appropriate, tighten all the screws that were loosened.**
5. **Perform print and confirm that there are no wrinkles. If there are wrinkles, make adjustments again.**

Media Width Adjustment (p.66)
Media Thickness Adjustment (p.65)

NOTE: If the media thickness adjustment dial and media width adjustment dial are not appropriate, wrinkles may occur in the ribbon. If wrinkles occur despite adjusting the ribbon guide, adjust these dials also.

Cleaning

Wipe off any foreign matter such as media dust, dirt and adhesive substances built up around the printhead with the head cleaning pen (head cleaner) provided, and use a soft cloth soaked in ethyl alcohol for the platen etc.
It is particularly important to clean the thermal printhead after printing on thermal media for long periods, which will guarantee the print quality and extend the life of the thermal printhead.
Note: Always use the head cleaner when cleaning the thermal printhead.

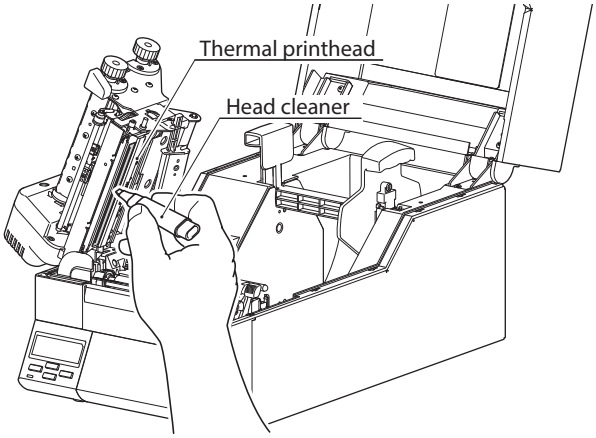

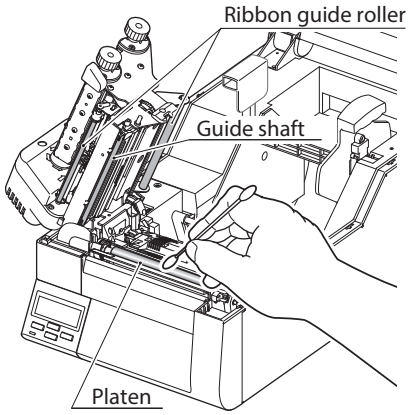

⚠ Caution

Do not use any solvent other than ethyl alcohol. Solvents such as benzene, acetone and thinner will dissolve plastic parts and destroy the thermal printhead, platen and much of the printer!
Try to avoid using "excessive amounts" of ethyl alcohol to clean the platen. Excessive use will harden the platen surface prematurely.

Troubleshooting

This chapter explains corrective actions taken when the printer malfunctions or when an error message is displayed.

Items to check when a malfunction occurs

When the printer malfunctions during operation, take corrective action with reference to the following table. If the corrective action does not solve the problem, consult with the service personnel at the dealer where you purchased the printer.

Connection to Power (p.20)

Cleaning (p.73)

Setting the Ribbon (p.34)

Indication	Check	Corrective action
The LED do not lightup when printer power is connected.	1) Is the plug of the power cord correctly inserted into the electric outlet?	1) Insert the plug of the power cord correctly in the electric outlet.
	2) Is the connector of the power cord correctly inserted into the power inlet of the printer?	2) Insert the connector of the power cord correctly into the power inlet of the printer.
	3) Is the power cord damaged?	3) Replace the power cord. Consult with the dealer where the printer was purchased to make sure you obtain a cord made especially for the printer. Note: Do not use any power cord except one made especially for the printer.
	4) Is power supplied to the electric outlet the printer is connected to?	4) Check to make sure power is supplied to the outlet. If there are any problems, make sure power is supplied to the building. Or find out if a power failure has occurred.
	5) Is the main fuse in the building's fuse box burnt out?	5) If necessary, replace the main fuse in the building's fuse box, and reset the main breaker. Ask a qualified serviceman to carry out the replacement.
Paper is feeding, but nothing is printed.	1) Is the thermal printhead dirty? Is a label stuck to the head?	1) If it is dirty, remove the dirt with the attached head cleaner. If a label is stuck to the thermal printhead remove it. Note: Do not use a metal object to remove a label stuck to the inside of the printer. (This may damage the thermal printhead.) If adhesive label material is stuck to the thermal printhead, remove it with a soft cloth soaked in ethyl alcohol.
	2) Is the recommended ribbon or a ribbon of the same type used?	2) Use the recommended ribbon or a ribbon of the same type.

Troubleshooting

	Indication	Check	Corrective action
Setting the Media (p.25) *Setting the Ribbon (p.34)* *Menu Setting Table (p.45)*	The printer is not printing neatly.	1) Are the media and the ribbon correctly set?	1) Correctly set the media and the ribbon.
		2) Is the printing density too high or too low?	2) Set the appropriate printing density using the menu or control software. Note: Consult with the dealer that supplied the printer concerning the replacement.
Cleaning (p.73)		3) Is the platen dirty? Is it deformed?	3) If it is dirty, clean it with ethyl alcohol. If it is deformed, replace it. Note: Consult with the dealer that supplied the printer concerning the replacement.
		4) Is the thermal printhead dirty? Is a label stuck to the head?	4) If it is dirty, remove the dirt with the attached head cleaner. If a label is stuck to the head, remove it. Note: Do not use a metal object to remove a label stuck to the inside of the printer. (This may damage the thermal printhead .) If adhesive label material is stuck to the print head, remove it with a soft cloth soaked in ethyl alcohol.
Setting the Ribbon (p.34)		5) Is the recommended ribbon or a ribbon of the same type used?	5) Use the recommended ribbon or a ribbon of the same type.
Media Thickness Adjustment (p.65)		6) Is the thermal printhead in the correct position for the media that is used?	6) Adjust the offset of the thermal printhead with the media thickness adjustment dial.
Media Width Adjustment (p.66)		7) Is the printer's head pressure balance correct for the width of the media that is used?	7) Adjust the thermal printhead pressure with the media width adjustment dial.

Troubleshooting

	Indication	Check	Corrective action
Loading roll media (p.26) *Setting the Ribbon (p.34)*	The printing position changes.	1) Are the media and the ribbon correctly set?	1) Correctly set the media and the ribbon.
Cleaning (p.73)		2) Is the platen dirty? Is it deformed?	2) If it is dirty, clean it with ethyl alcohol. If it is deformed, replace it. Note: Consult with the dealer that supplied the printer concerning the replacement.
LED Functions (p.24)		3) Are the data contents and the command signals from the host appropriate?	3) If an error message is displayed, check the content of the software and the communication status set by the host computer.
Menu Setting Table (p.45)		4) Are the menu values set appropriately?	4) Set the correct menu values using the operating panel or the host computer.
		5) Are the sensitivities of the media sensors appropriate for the media that is used?	5) Set the media sensitivity to appropriate values. If this does not solve the problem, change the "Sensor level" that is set in the "System setup."
Ribbon Tension Adjustment (p.67)	The ribbon is wrinkled.	1) Is the ribbon tension suitable for the ribbon that is used?	1) Adjust the tension with the ribbon tension adjustment knob.
Ribbon Balance Adjustment (p.69)		2) Is the ribbon used correctly balanced to the right and left?	2) Adjust the left - right balance with the ribbon balance adjustment knob.
		3) Is the printing density too high?	3) Set the appropriate printing density using the menu or control software.
		4) Are the media and ribbon there commended products or equivalent products?	4) Use the recommended products or equivalent products. If this does not correct the problem, contact a service representative.
Ribbon Tension Adjustment (p.67)	The ribbon slips (ribbon dirt is produced.)	1) Is the ribbon tension suitable for the ribbon that is used?	1) Adjust the tension with the ribbon tension adjustment knob.
Setting the Ribbon (p.34)	The ribbon does not wind.	1) Is the ribbon set in the correct course?	1) Set the ribbon in the correct course.
		2) Is the ribbon winding direction reversed?	2) Set the correct winding direction.

Specifications

Item		Description	
Printing	Printing method	Thermal transfer/Direct thermal	
	Resolution	Main scanning line density: 203 dot / inch (8 dot / mm) (CL-E720) 300 dot / inch (11.8 dot / mm) (CL-E730)	
		Sub- scanning line density: 203 dot / inch (8 dot / mm) (CL-E720) 300 dot / inch (11.8 dot / mm) (CL-E730)	
		Head 864 dots (printable dots: 832 dots) (CL-E720) Head 1275 dots (printable dots: 1240 dots) (CL-E730)	
	Max. print width	104 mm (CL-E720)	4.1 inch (CL-E720)
		105 mm (CL-E730)	4.1 inch (CL-E730)
	Max. print length (For Datamax® emulation)	2539.7 mm (CL-E720)	99.99 inch (CL-E720)
		1879.6 mm (CL-E730)	74.00 inch (CL-E730)
	Max. print length (For Zebra® emulation)	4013.28 mm (CL-E720)	158.00 inch (CL-E720)
		1879.6 mm (CL-E730)	74.00 inch (CL-E730)
	Print density	Print density is adjustable with software	
Printing speed	Printing speed setting	2 to 8 inches per second (can be set in 1 inch unit) (CL-E720 Direct thermal) • 7 to 8 inches per second with a print density of 10. Use of thermal media is recommended. • 2 to 6 inches per second when the optional peeler is used. 2 to 6 inches per second (can be set in 1 inch unit) (CL-E720 Thermal transfer/CL-E730)	
Print mode	Batch mode	Normal printing (single or multiple sheets)	
	Tear off mode	Feeds back media to the tear-off position after printing is completed.	
	Cut mode [*1]	Prints while cutting at designated sheet units. The following two kinds of cut mode operations are done. • Backfeed • Cut through (Cut through refers to stopping present printing to cut the previous label when it reaches the cut position. After cutting, printing restarts but a gap may be created at the seam of the printing at this time.)	
	Peel mode [*1]	Peels labels from the liners after printing them.	
Media [*2]	Types of media	Roll, fanfold (continuous media, die-cuts, continuous tags. paper or tickets)	
	Recommended media	Thermal transfer: label media (LR1111 Lintec) Direct thermal media: label media (150LA-1 Ricoh), tag media (130LHB Ricoh)	
	Max. media width	118.0 mm	4.65 inch
	Min. media width	19.5 mm	0.77 inch
	Min. label width	19.5 mm	0.77 inch
	Min. label pitch [*3]	6.35 mm	0.25 inch
	Max. media thickness	0.254 mm	0.01 inch
	Max. media length (For Datamax® emulation)	2539.7 mm (CL-E720)	99.99 inch (CL-E720)
		1879.6 mm (CL-E730)	74.00 inch (CL-E730)
	Max. media length (For Zebra® emulation)	4013.28 mm (CL-E720)	158.00 inch (CL-E720)
		1879.6 mm (CL-E730)	74.00 inch (CL-E730)

Specifications

Item		Description	
Media[*2]	Min. media length	6.40 mm	0.25 inch
	Min. media thickness	0.0635 mm	0.0025 inch
	On-board roll media diameter	•Max. external diameter: 203 mm •Media core: 25 to 76 mm •Min. media core external diameter (when using label media) External roll: 50.8 mm Internal roll: 76.0 mm	8 inch 1 to 3 inch 2 inch 3 inch
Ribbon	Recommended ribbon	B110A Ricoh	
	Max. ribbon width	114.0 mm	4.50 inch
	Min. ribbon width	25.4 mm	1.00 inch
	Max. ribbon length	360.0 m	1181 feet
	Max. roll diameter	74.0 mm	2.90 inch
	Inner diameter of the paper core	25.4 ± 0.254 mm	1.00 ± 0.01 inch
	Ribbon end tape length	80.0 mm	3.15 inch
	Ribbon end detection	Ribbon end detection by ribbon encoder	
Bar code (For Datamax® emulation)	One-dimension	• Code 3 of 9 • UPC-A• UPC-E• EAN-13 (JAN-13) • EAN-8 (JAN-8)• Interleaved 2 of 5• Code 128 • HIBC (Modulus 43-used code 3 of 9)• Codabar (NW-7) • Int 2 of 5 (Modulus10-used Interleaved 2 of 5)• Plessey • Case Code• UPC 2DIG ADD• UPC 5DIG ADD • Code 93• Telepen• ZIP• UCC/EAN128 • UCC/EAN128(for K-MART) • UCC/EAN128 Random Weight• FIM	
	Two-dimension	• UPS Maxi Code• PDF-417• Data Matrix• QR Code• Aztec • GS1 Databar Omnidirectional (RSS-14) • GS1 Databar Truncated (RSS-14 Truncated) • GS1 Databar Stacked (RSS-14 Stacked) • GS1 Databar Stacked Omnidirectional (RSS-14 Stacked Omnidirectional) • GS1 Databar Limited (RSS Limited) • GS1 Databar Expanded (RSS Expanded)	
Bar code (For Zebra® emulation)	One-dimension	• Code11 •Interleaved2of5 •Code39 •EAN-8 •UPC-E•Code93 •Code128 •EAN-13•Industrial2 of 5•Standard2 of 5 •ANSI CODABAR•LOGMARS •MSI•Plessey •UPC/EAN Extensions •UPC-A •POSTNET•Planet	
	Two-dimension	•Code49 •PDF-417 •CODA BLOCK •UPS Maxi Code •Micro PDF-417 •Data Matrix•QR Code •GS1 Databar Omnidirectional (RSS-14) •GS1 Databar Truncated (RSS-14 Truncated) •GS1 Databar Stacked (RSS-14 Stacked) •GS1 Databar Stacked Omnidirectional (RSS-14 Stacked Omnidirectional) •GS1 Databar Limited (RSS Limited) •GS1 Databar Expanded (RSS Expanded) •TLC39 •Aztec	

Specifications

Item		Description
Font (For Datamax® emulation)		1. Seven kinds of fixed pitch font • Overseas, English fonts and European fonts 2. OCR fonts OCR-A[*4], OCR-B[*4] 3. Proportional fonts CG Triumvirate smooth font CG Triumvirate Bold smooth font 203dpi: (6, 8, 10, 12, 14, 18, 24, 30, 36, 48 points) (CL-E720) (4, 5, 6, 8, 10, 12, 14, 18, 24, 30, 36, 48 points) (CL-E730) • Character set: Conforms with code page 850 standards 4. TrueType™ rasterizer[*5]
Font (For Zebra® emulation)		1. Five kinds of fixed pitch font • Overseas, English fonts and European fonts 2. OCR fonts OCR-A[*4], OCR-B[*4] 3. Proportional font CG Triumvirate Condensed Bold 4. True type™ rasterizer[*5]
Symbol set		PC866U Ukraina, PC Cyrillic, ISO 60 Danish/Norwegian, DeskTop, ISO 8859/1 Latin 1, ISO 8859/2 Latin 2, ISO 8859/9 Latin 5, ISO 8859/10 Latin 6, ISO 8859/7 Latin/Greek, ISO 8859/15 Latin 9, ISO 8859/5 Latin/Cyrillic, ISO 69: French, ISO 21: German, ISO 15: Italian, Legal, Math-8, Macintosh, Math, PC-858 Multilingual, Microsoft Publishing, PC-8, Code Page 437, PC-8 D/N, Code Page 437N, PC-852 Latin 2, PC-851 Latin/Greek, PC-862 Latin/Hebrew, Pi Font, PC-850 Multilingual, PC-864 Latin/Arabic, PC-8 TK, Code Page 437T, PC-1004, PC-775 Baltic, Non-UGL, Generic Pi Font, Roman-8, Roman-9, ISO 17: Spanish, ISO 11: Swedish, Symbol, PS Text, ISO 4: United Kingdom, ISO 6: ASCII, Ventura International, Ventura Math, Ventura US, Windows 3.1 Latin 1, Wingdings, Windows 3.1 Latin 2, Windows 3.1 Baltic (Latv, Lith), Windows 3.0 Latin 1, Windows Latin/Cyrillic, Windows 3.1 Latin 5, EUC, JIS, Shift JIS, Unicode, KS Code, GB Code
Control language		Conforms to Datamax® programming language and Zebra® programming language, XML (Ethernet interface model)
Outline of electronic devices	CPU	ARM Cortex™-A9 (Max. operation frequency 400MHz)
	ROM	Standard equipment: FLASH ROM 16 MBytes (User area: 4 MBytes)
	RAM	Standard equipment: SDRAM 32 MBytes (User area: 4 MBytes)
Media detection sensors	Transparent sensor	Detects media gap between labels, notches on tags, and media out
	Reflective sensor	Detects reflective mark on back of media and media out
	Ribbon tension sensor	Detects stretching and slackness of ink ribbon
	Ribbon encoder sensor	Detects end of ink ribbon
	Label peeling sensor[*1]	
Communication interfaces	USB	USB2.0 (High speed 480Mbps / Full speed 12Mbps)
	Wired LAN	100BASE-TX / 10BASE-T

Specifications

Item		Description
Communication interface options	Serial	2400 4800 9600 19200 38400 57600 115200bps
	Parallel	IEEE1284 (Conpatible / Nibble / ECP)
	Network	Multi-function spec Ethernet (10-Base-T/100-BASE-TX) Standard spec Wi-Fi (IEEE802.11n/IEEE802.11g/IEEE802.11b) Multi-function spec Wi-Fi (IEEE802.11n/IEEE802.11g/IEEE802.11b) Bluetooth 3.0+EDR (standard specifications / multifunction specifications)
Indications and switches	LED	Power ON (green), error (red)
	Buzzer	Alarms, errors, etc.
	Operating panel keys	PAUSE, FEED, STOP, MENU
	Head-up detection sensor	Detects head open
	Power switch	Turns power on and off
Power (standards)	120 V version	100-120V, 50/60Hz ENERGY STAR® Power consumption: Standby 3.2 W (LCD is off) (CL-E720) 3.1 W (LCD is off) (CL-E730) Printing 69 W (Thermal transfer/Print Speed 6IPS/Print Darkness 10/ Printing rate 12.5%) (CL-E720) 75 W (Thermal transfer/Print Speed 6IPS/Print Darkness 10/ Printing rate 12.5%) (CL-E730)
	220 V version	220 V-240 V (-10%+6%), 1.2 A, 50/60 Hz (Europe) EN60950-1, EN55022 (Class A), EN55024, EN61000-3-2, EN61000-3-3, ENERGY STAR® Power consumption: Standby 2.8 W (LCD is off) (CL-E720) 2.7 W (LCD is off) (CL-E730) Printing 65 W (Thermal transfer/Print Speed 6IPS/Print Darkness 10/ Printing rate 12.5%) (CL-E720) 71 W (Thermal transfer/Print Speed 6IPS/Print Darkness 10/ Printing rate 12.5%) (CL-E730)
Environment	Operating temperature conditions:	Operating temp. 0 to 40°C, humidity 30 to 80%, condensation free (Conditions: ventilation, and natural convection) 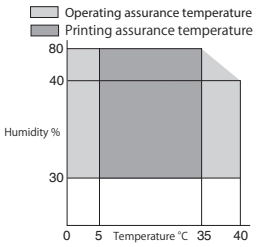 Conditions assuring operation and printing
	Storage temperature conditions:	Temp. –20 to 60°C, humidity 5 to 85% (Conditions:ventilation, and natural convection) * However, for storage at high temperature and humid environments, the combination of 40°C and 85% RH (no condensation) is taken as the worst value.

Specifications

Item	Description
External dimensions	Approx. 250 (W) × 458 (D) × 261 (H) mm 9.9 (W) × 18 (D) × 10.3 (H) inch 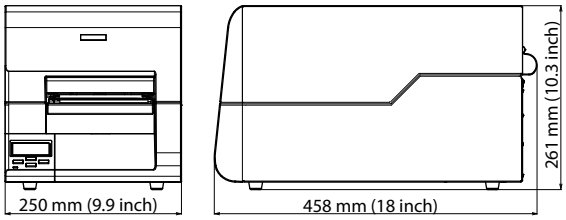
Weight	Approx. 11 kg
Accessories	Test label media, Test ribbon, Quick start guide*6, Safety Instructions, Head cleaner, Power cord, Media holder bar and Media holder guide, Ribbon holder, Paper core
Option	Auto-cutter unit, Peeler unit, IEEE1284 Parallel interface board, Serial interface board, Wired LAN interface board (multi-function spec), Wireless LAN interface board (standard spec / multi-function spec), Bluetooth board

*1 Options can be separately purchased.
*2 If you wish to use other media than those recommended, please contact the shop where you bought this item.
*3 When a media pitch of less than 1 inch is used, activate the "Small Media Adjustment" setting in the "Page Setup."
*4 The OCR font may have a low recognition rate according to the reader.
*5 UFST™ and TrueType™ rasterizer are licensed from Monotype Imaging, Inc.
*6 You can download the driver, SDK, utility and BarTender (label creation software) from the URL listed in the Quick Start Guide.

Interfaces

This printer is connected to a computer and prints according to commands sent from the computer.
There are two methods of interface with a computer, and it can be connected to any equipment that supports these methods. You can also connect to the computer with serial, parallel and wireless LAN.

USB Interface

Specifications

Standards	Complies with Universal Serial Bus Specification
Transmission speed	480Mbps (High-Speed) / 12Mbps (Full-Speed)
Receive buffer	16kB
Connector	15120-00410 (KST)

Signal line and pin arrangement

Pin No.	Signal code	Signal	Function
1	VBUS	USB power	USB power (+5V)
2	D –	Signal line –	– signal line
3	D +	Signal line +	+ signal line
4	GND	GND	GND

Ethernet Interface

Support protocol

Network layer	ARP, IP, TCP
Transport layer	TCP, UDP
Application layer	DHCP, HTTP, SNMP, Raw Socket Port

Raw Socket Port

Perform two-way communication of print data and printer status

Port No.	9100 (can be changed)
Port communication direction	Two-way
Socket max. connections	8
Printable no. of connections	1 (other sockets are reserved)
Timeout	Default value: 60 sec Can be set between 0 and 300. No timeout when "0" is set.

HTTP Server

Settings of printer unit and network are done by LinkServer Web Interface. For details, see "LinkServer Web Interface Configuration".

Port No.	80
Max. simultaneous connections	4
HTTP version	HTTP/1.1

DHCP

IP address is automatically obtained from DHCP server within 60 seconds after power is connected.
If the address cannot be obtained automatically, fixed IP address (default value: 169.254.1.10) is applied.

SNMP Agent

By SNMP Agent function

SNMP version	SNMPv2 (Trap function is not supported)
Port No.	161
Supported MIB	HOST-RESOURCES-MIB, Citizen-MIB(Private)
Community name	public

Interfaces

Connecting the connector

● Compatible connectors
Printer: RJ-45 connector

Note: Please do not insert the USB cable by mistake. Doing so may damage the cable and connector.

Pin number	Signal name	Function
1	TX+	Send (+)
2	TX–	Send (–)
3	RX+	Receive (+)
4	N.C	-
5	N.C	-
6	RX–	Receive (–)
7	N.C.	-
8	N.C.	-

Function of LED

The indications by LED are given below.

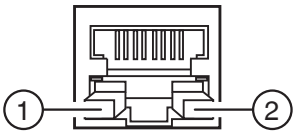

① Network communication speed display

Communication speed	LED (green)
100Mbps	ON
10Mbps/ disconnection	Blink

② Network status display

Display description	LED (yellow)
Connected	ON
Disconnected	OFF
Communicating data	Blink

LinkServer Web Interface Configuration

The integral LinkServer web configuration interface can be used to adjust settings of the printer and its interfaces.

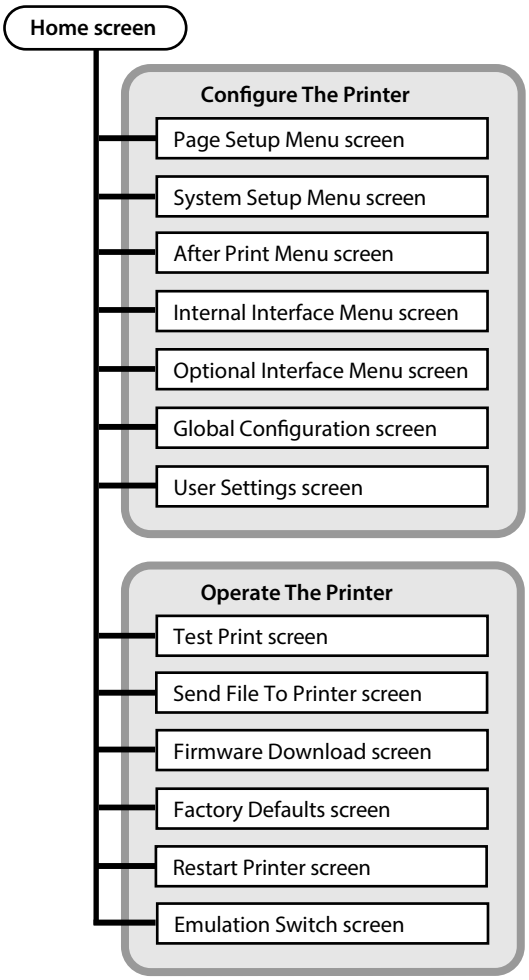

Using and Connecting to LinkServer

① Start a Web browser on a computer connected to the same network as the printer and input the IP address set in the printer to be connected in the address bar (red frame part). (If IP address is '169.254.1.10', input 'http://169.254.1.10'.)
There are three types of rights for the LinkServer, i.e. User, Operator, and Administrator. The display menu can be changed based on the user privileges so as to limit the operation of the LinkServer accordingly.
The home screen for User rights will be displayed when connecting.

Home screen (User rights)

② A confirmation screen is displayed when one presses the [LOG IN] button.

Confirmation screen

- **The factory default setting for Operator authentication**
  The user name and password to be entered are both "Operator".
- **The factory default setting for Administrator authentication**
  The user name and password to be entered are both"Admin".

③ If authentication is successful, the home screen for Operator or Administrator rights is displayed.
User names and passwords for any Operator and Administrator can be changed in the User Settings menu. (1-20 character symbols and alphanumeric characters.)
The User rights and Operator rights menu display contents can be changed in the User Settings menu.

Home screen (Administrator rights)

- **Printer Information:** Displays information of printer unit
- **Configure The Printer:** Performs operations as set by menu key of printer
- **Operate The Printer:** Operates printer

④ If one is logged in with operator rights or administrator rights, pressing the [LOG OUT] button results in logging out and returning to the home screen with user rights.

Interfaces

Screen and URL in LinkServer

Screen	URL	Description
Home	/index.html	Displays Home screen of LinkServer.
Page Setup Menu	/PageSetup	Page Setup: Setting of printing speed and thickness, printing system control, page format, etc.
System Setup Menu	/SystemSetup	System Setup: Setting of media (label) detection method, label, buzzer, unit system, etc.
After Print Menu	/AfterPrintSetup	After Print: Sets operations such as tear-off and cutter at the end of printing.
Internal Interface Menu	/InterfaceSetup	Performs various settings of built-in interface.
Optional Interface Menu	/OptionInterfaceSetup	Performs various settings of Option Interface.
Global Configuration	/GlobalConfig	Converts the settings (3 types) saved in printer.
User Settings	/UserSettings	Setting of user name, password, and customization of the display menu for each user.
Test Print	/TestPrint	Performs test print and printer head test.
Send File To Printer	/SendFile	Sends file to printer.
Firmware Download	/FirmwareDownload	Updates firmware of printer.
Factory Defaults	/FactoryDefault	Resets the printer.
Restart Printer	/Restart	Restarts printer.
Emulation Switch	/EmulationSwitch	Switches emulation of DMX and ZPL2.

NOTE: The operation of LinkServer has been verified in Internet Explorer 10/11 and Google Chrome 21.

Serial Interface (Option)

Specifications

System	Start/stop asynchronous duplex communication
Signal level	RS-232C
Baud rate	2400, 4800, 9600, 19200, 38400, 57600, 115200bps
Bit length	7Bit, 8Bit
Stop bit	1Bit, 2Bit
Parity	Odd, even, none
Connector	D-SUB 25PIN

Signal line and pin arrangement

Pin No.	Signal code	Signal name	Function
1	FG	Protective grounding	Protective grounding
2	TXD	Transmitted data	Signal line that transmits data from the printer to other devices
3	RXD	Received data	Signal line that transmits data from other devices to the printer
4	RTS	Transmission request	Signal line that becomes active when the printer can receive data
5	CTS	Able to transfer data	Signal line that becomes active when other devices can receive data from the printer
6	DSR	Data set relay	Signal line used by external devices to notify printer that they are ready to communicate
7	SGND	Signal line ground	Shows the ground level of the signal line
8-13	NC	-	Not used
14	VCC	+3.3V	(FACTORY USE ONLY)
15-19	NC	-	Not used
20	DTR	Data terminal relay	Signal line used by printer to notify external devices that printer is ready to communicate
21-24	NC	-	Not used

Interfaces

Dip switch

Communication conditions settings can be changed by using the dip switch available on the interface board.

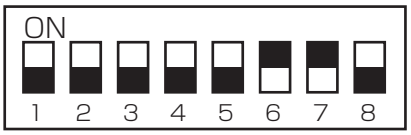

Dip switch

Respective functions of the switches are as follows.

Switch No.	Function	ON	OFF (Factory setting)
1	Selection of communication conditions setting	According to setting of dip switch	According to setting in printer unit
2	Handshake	XON / XOFF	DTR / DSR
3	Bit length	7 bit	8 bit
4	Parity check	Yes	No
5	Parity selection	Even	Odd
6	Selection of baud rate	See below	
7			
8	Reservation	-	-

Baud rate selection

Switch No.		Baud rate (bps)
6	7	
OFF	OFF	2400
ON	OFF	4800
OFF	ON	9600
ON	ON	19200

XON/XOFF Protocol

Requirements to output X-ON code

- Communication is possible when the power is on.
- When the receive buffer has less than 128 bytes available, XOFF code is output, then the receive buffer has at least 1024 bytes available.

Requirements to output the X-OFF code

- When the receive buffer has less than 128 bytes available

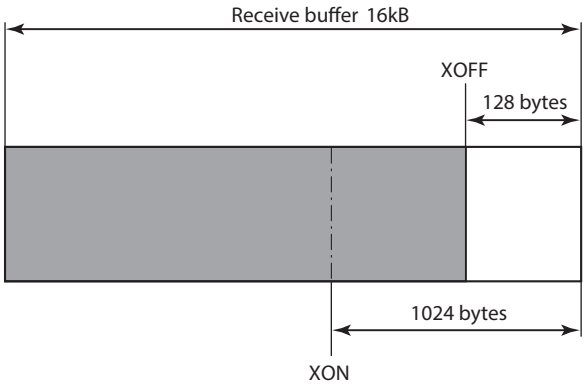

DTR Protocol

Conditions when the DTR signal is "Ready (High)"

All the following conditions are satisfied.

- The receive buffer is 128 bytes or more available capacity.
  - * When the receive buffer has less than 128 bytes available and the DTR signal has changed to BUSY (Low) status, BUSY status is maintained until the capacity of the receive buffer has reached 1024 bytes or more.

Conditions when DTR signal is "Busy (Low)"

- When the receive buffer has fallen to less than 128 bytes available.

Parallel Interface (Option)

Specifications

Transmission mode	8-bit parallel data
Receive buffer size	16kB
Transmission modes	Compatible mode: It is an asynchronous forward direction of the byte width (from host to printer) channel, and the interface line of the data is operated in accordance with signal line definitions of Centronics. NIBBLE mode: Nibble mode is asynchronous reverse channel communication with data transmission controlled by the host computer. In reverse channel transmission, the data is nibble transmitted in two parts using four status lines (Fault, Select, PE, and Busy). And nibble mode can be used along with compatible mode to send data in two directions. ECP mode: ECP mode permits bi-directional asynchronous data transmission, and thanks to its interlock handshake, it does not require the timing necessary with compatible mode.
Signal level	IEEE1284 standard

Signal line and pin assignment table

Pin No.	Signal name	I/O	Function
1	*STROBE	Input	Strobe signal to read in 8-bit data
2-9	DATA1-8	Input	8-bit parallel signal
10	*ACKNLG	Output	8-bit data request signal
11	BUSY	Output	Signal specifying printer busy
12	PERROR	Output	Signal specifying media out
13	SELECT	Output	Signal specifying if the printer is on-line (printing enabled) or off-line (pausing)
14	*AUTOFD	Input	Invalid (ignored)
15	NC	-	Not used
16	GND	-	Signal ground
17	FGND	-	Frame ground
18	P.L.H	Output	Peripheral logic high (pull up to +5 V at 1.2 kΩ)
19-30	GND	-	Ground for twisted pair return
31	*INIT	Input	Printer reset
32	*FAULT	Output	Signal specifying printer error
33-35	NC	-	Not used
36	*SELECTIN	Input	Invalid (ignored)

Parallel port status signals when an error occurs

The status of a signal line will not be changed in bi-directional mode such as nibble or ECP mode.

Error	Change in the status of a signal line in compatible mode
Paper end	Busy : L → H PError : L → H Select : H → L nFault : H → L
Error other than paper end • Head open • Other	Busy : L → H PError : L →unchanged Select : H → L nFault : H → L
Conditions for Busy	• Receive buffer full • Data being read • Error

Compatible timing specification

[When power is on] (Time it goes off-line)

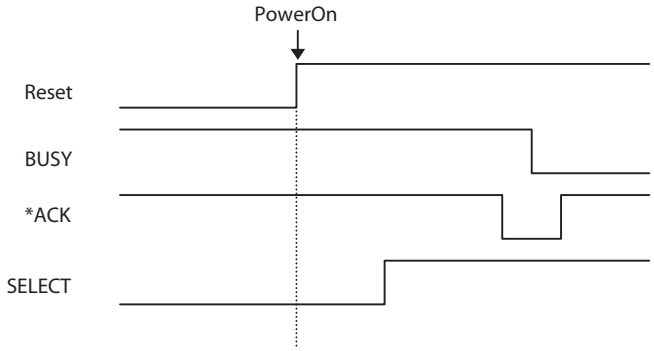

[While receiving data]

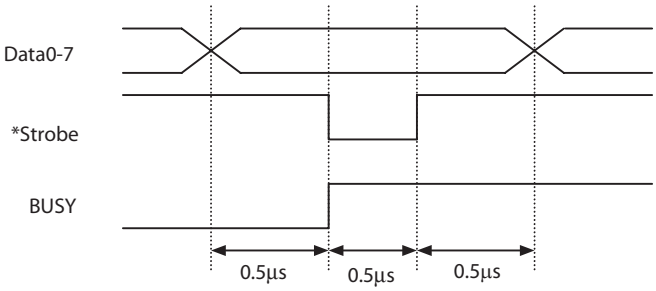

Note: Busy rises when *Strobe signal starts, and data is latched with *Strobe signal starts.

Interfaces

[While receiving INIT signal]

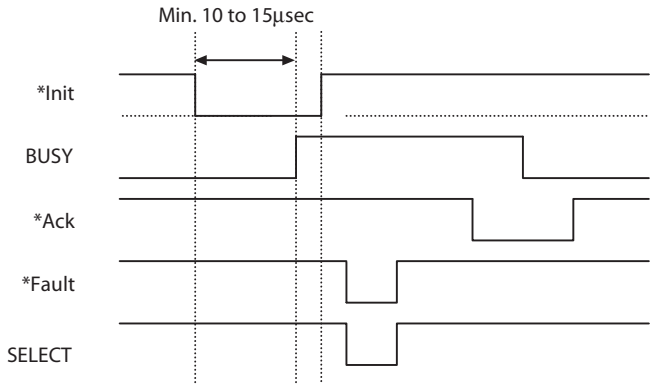

Note: If the *Init signal does not have width of 10 to 15µsec or more, it cannot act as an Init signal. If it is lower, the *Init signal is ignored. BUSY starts up when the *Init signal is perceived.

Relation of the timing of the BUSY signal and the *ACK signal

[Center – ACK]

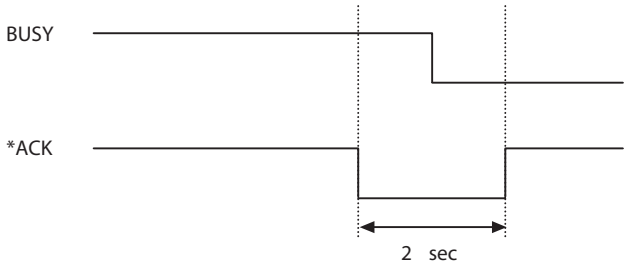

Ethernet (LAN)/Wireless LAN Interface Board

This section provides an overview of the interface board. For details on this board, including explanations about the USB host function and XML peripheral device support, refer to the separate manual.

Connecting the Interface Cable

1. **Turn off the power.**
2. **Confirm the orientation of the interface cable and connect it to the port.**

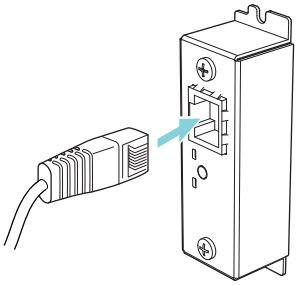

3. **Connect the other connector to a hub, router, or similar device.**

⚠ Caution

- When disconnecting the cable, always hold the connector.
- Place the interface cable so that people do not trip on it.
- Hold the connector of the LAN cable perpendicular and straight when connecting or disconnecting it. Doing it at an angle may cause the connector to misconnect.

Note: Do not connect multiple interfaces at the same time.

Connecting a Peripheral Device

1. **Turn off the power.**
2. **Connect the cable of a peripheral device to this port.**

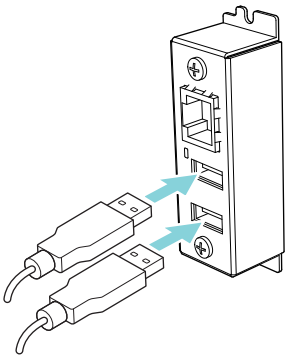

Interfaces

Connecting the wireless LAN adapter

1. **Turn off the power.**
2. **Connect the wireless LAN adapter to the connector.**

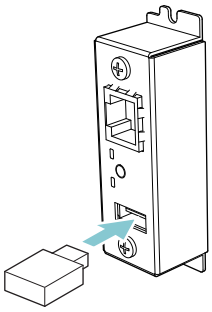

Panel button operation

Board operations are performed using the panel button on the rear of the LAN board.

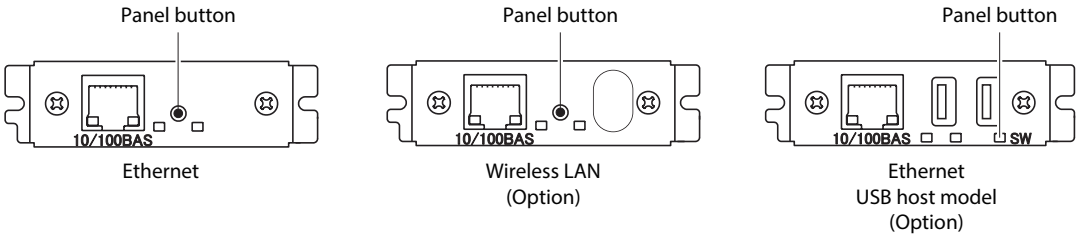

- Enabling LAN connection
  Turn on the printer. Operation of this board will start about 20 seconds later.
- Printing LAN setup information
  Press the panel button.
- Entering setting mode
  Hold down the panel button. A buzzer* will sound once to indicate that setting mode has been entered.
  • You can use setting mode to read factory settings.
  • If no operation is performed for 3 seconds in configuration mode, the mode switches back to normal mode.
- Returning to factory settings
  Enter the board setting mode, and then hold down the panel button. This returns the board to its factory settings.

CAUTION

The board will automatically restart after this operation is complete. After clearing settings, you will need to re-configure network settings.

Interfaces

LED Functions

The tables below explain how to interpret LED indications.

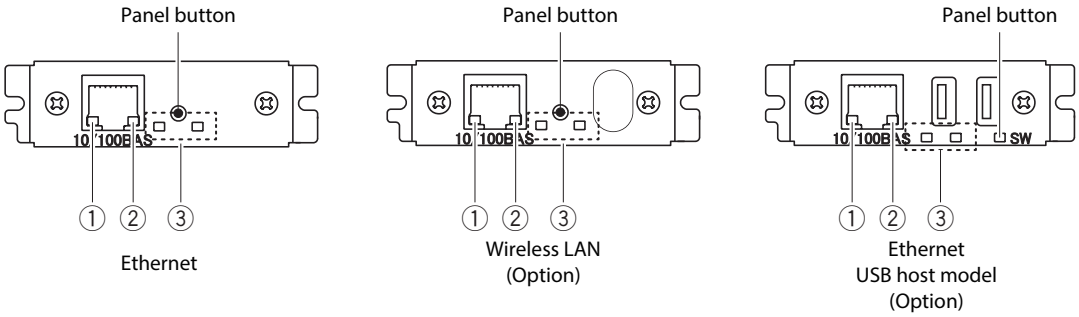

① Wired LAN transmission speed

Transmission speed	LED (green)
100 Mbps	Lit
10 Mbps/Not connected	Unlit

② Wired LAN connection/transmission status

Connection status	LED (yellow)
Connected	Lit
Not connected	Unlit
Data transmission in progress	Flashing

③ Wired/Wireless LAN status

Connection status		LED (green)	LED (red)	Description
No printer connection		Unlit	—	Board is not connected with a printer.
Printer connection	No network connection	Lit	Unlit	Board is connected with a printer.
	Connected by wired LAN	Lit	Flashing (1-second cycle)	Getting an IP address from the DHCP server over wired LAN.
	Wired LAN operation	Lit	Lit	Network operation being performed over wired LAN.
	Connected by wireless LAN *	Flashing (2-second cycle)	Flashing (1-second cycle)	Connecting to an access point or getting an IP address from the DHCP server over wireless LAN.
	Wireless LAN operation *	Flashing (2-second cycle)	Lit	Network operation being performed over wireless LAN.
Resource error		Alternate flashing (1-second cycle)		Board is unable to operate normally.
System error		Alternate flashing (0.2-second cycle)		Board is unable to operate normally.

*: Only when using wireless LAN

Interfaces

Web Manager

The interface board has a Web Manager function that can be used to connect to the board with a web browser and change board settings.

Starting up Web Manager

1. **Start up a web browser.**
2. **In the address field, input the board's IP address and then press [Enter].**

HOME Screen

This is the Web manager home screen.
The following screen is an example for a wireless LAN.

Here, press the [CONFIG] button.

Interfaces

CONFIG Screen

This will display the Login dialog box shown below. Log in as an administrator and then configure interface board settings.

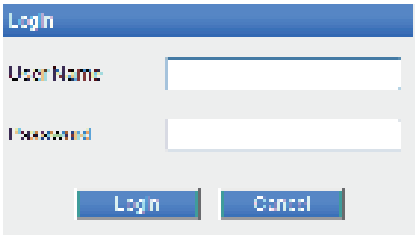

- User Name
  Input a board administrator user name. (Initial setting: admin)
- Password
  Input the administrator user password. (Initial setting: admin)
- [Login] button
  After inputting an administrator user name and password, click the [Login] button.
  This displays the setting screen.
  For details about settings, refer to the separate manual.

Old Ethernet (LAN) Interface Board

This section provides an overview of the Ethernet (LAN) interface board. For details about this board, refer to the separate manual.

Panel button operation

Board operations are performed using the panel button on the Ethernet board. You can use the button to print setup information and to return the board to its factory settings.

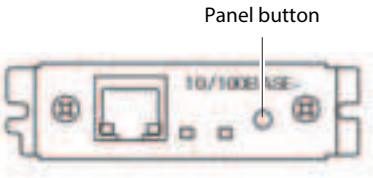

- Printing network setup information
  Press the panel button.
- Entering setting mode
  Hold down the panel button. A buzzer* will sound once to indicate that setting mode has been entered.
  • You can use setting mode to read factory settings and to print firmware information.
  • If you do not perform any operation for three seconds while in setting mode, a buzzer* will sound once to indicate the board has returned to normal mode.
  * Depending on settings, the buzzer may not sound.
- Returning to factory settings
  Enter the board setting mode, and then hold down the panel button. This returns the board to its factory settings.

CAUTION

■The board will automatically restart after this operation is complete.
■If settings are configured to obtain an IP address from a DHCP server automatically, the new IP address may be different from the previous one.

Interfaces

LED Functions

The tables below explain how to interpret LED indications.

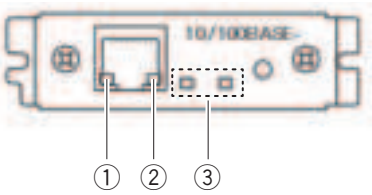

① Network transmission speed

Transmission speed	LED (green)
100 Mbps	Lit
10 Mbps/ Not connected	Unlit

② Network status

Status	LED (yellow)
Connected	Lit
Not connected	Unlit
Data transmission in progress	Flashing

③ Board status

Status	LED (green)	LED (yellow)	Description
No printer connection	Unlit	—	Board is not connected with a printer.
Connecting with printer	Lit	—	Board is connected with a printer.
No network connection	—	Unlit	Board is not connected with a network.
Getting IP address	—	Flashing (0.5-second cycle)	Getting an IP address from the DHCP server.
Connected with network	—	Lit	Network connection complete.
Resource error	Alternate flashing (0.5-second cycle)		Board is unable to operate normally.
System error	Alternate flashing (0.1-second cycle)		Board is unable to operate normally.

Interfaces

Changing network settings

You can use a web browser to access a special settings page to check and change board settings.

- Accessing the special settings page

1. **Use a web browser to access the URL of the special settings page. Specify the IP address assigned to the printer as the URL. (Example: For an IP address of 169.254.1.10, input: http://169.254.1.10.)**
2. **This displays the special settings page menu page.**

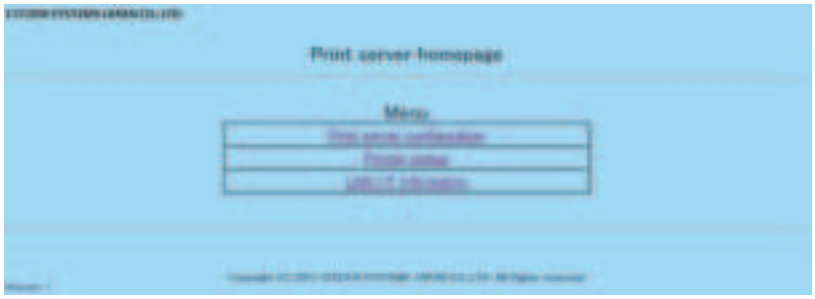

3. **Select "Print server configuration" to display the setting screen.**
   For details about settings, refer to the separate manual.

Interfaces

Bluetooth Interface

Specifications

Version	Bluetooth 3.0 + EDR
Profile	Serial Port Profile (SPP) iPod Accessory Protocol (iAP)
Power class	Class 2 (10 m line of sight)
Frequency band	2.400 to 2.483 GHz
Electrical specifications	Approx. 3 mA (average 27 mA during communication, maximum 70 mA)
Device name	"CL-E720_XX" (XX is the last two digits of the Bluetooth device address, default setting)

Part Names

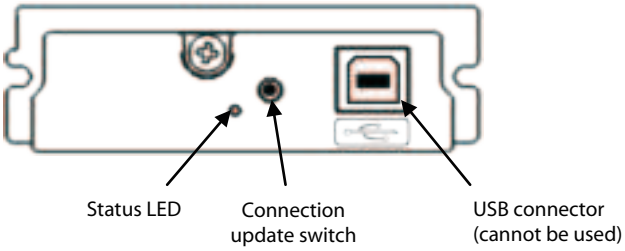

Bluetooth Status LED

Status	Description	Status LED (green)
Waiting to be discovered	Waiting for discovery or connection from other party	Flashing (lit: 125 ms, off: 125 ms)
Waiting for connection	Waiting for connection from other party	Flashing (lit: 250 ms, off: 750 ms)
iAP connection	Waiting for data session to be opened from iOS device	Repeats sequence of 3 flashes and 1 long off
Communication possible	(SPP/iAP) Data transfer is possible	Repeats sequence of 2 flashes and 1 long off
Error	Error or setting Bluetooth	Off

Interfaces

Pairing Operation

To enable Bluetooth communication, perform the following operation when establishing a Bluetooth connection for the first time.

1) Search for Bluetooth devices
   Check that Bluetooth is enabled on the host and then perform a Bluetooth device search.
   This product will be indicated as "CL-E720_XX" (XX is the last 2 digits of the unique Bluetooth address) when detected in the device search.
   Select this product from among the detected devices.
2) Perform pairing
   Normally, when the printer is selected in the device search, the process transitions to pairing setting.

Note: The process may not transition to pairing setting depending on the settings and type of host.

Function

1) Communication status display by LED
2) Security settings available (authentication, encryption, and device search restriction)
   This product is provided with the two security levels of high and medium, which can be selected in the menu settings.
   The difference between the security levels is whether or not there are authentication and encryption requests.
   An authentication request is required when starting a service search or iAP/SPP connection, and there is the following relationship for the authentication and encryption requests of the two security levels, including whether or not there is support for SSP on the device.

<Device without support for SSP>

Security setting	Service search authentication request	PIN code connection authentication	SPP connection authentication request	Encryption request
Medium	No	Yes	Yes	Yes
High	Yes	Yes	Yes	Yes

<Device with support for SSP>

Security setting	Service search authentication request	PIN code connection authentication	SPP connection authentication request	Encryption request
Medium	No	No	Yes	Yes
High	Yes	No	Yes	Yes

Note:

Even when "No" is indicated for a request, do as requested if there is a request from the other party.
Encryption for the security medium setting is enabled only for an authenticated iAP/SPP connection.

3) Pairing information retention function (maximum 8; most recent 8 are saved if 8 is exceeded)
4) Connection is approved by means of secure simple pairing (SSP) or a PIN code.
   The initial value of the PIN code is the last 4 digits of the 12-digit address (excluding the colon [:]) that is printed by a self test print, and if the PIN code contains any alphabet letters (A to F), specify them in uppercase.
   (Example: When 01:23:45:67:89:AB, the initial PIN code is 89AB.)
   For a host with the SSP function, pairing is achieved without any additional operation.
   For a host without the SSP function, you will be asked for a PIN code so enter the PIN code.

Interfaces

5) Connection update switch
Pressing this switch once transitions to the discoverable state. Also, pressing it for at least 2 seconds deletes the saved pairing information and transitions to a discoverable state.
If the paring information on the host is deleted, the device may not be displayed when you perform a device search again unless you also delete the pairing information on the printer. If that happens, delete the pairing information with the connection update switch to transition to the discoverable state.

6) iOS reconnect request function
For Bluetooth communication with an iOS device, communication between the paired iOS device and printer is not automatically restored if interrupted. However, if the reconnect request function is enabled, the printer tries to reconnect to the iOS device to restore communication automatically when both devices become able to communicate again.
Note 1: This function is enabled in the factory default state.
Note 2: Connection using this function can take some time when the host is not an iOS device.
Note 3: Even if the other party is an iOS device, the reconnect request function may interfere with communication in the following cases.
- When you wish Bluetooth communication to disconnect each time printing finishes
- When there are multiple iOS devices which print with that printer in the above cases, disable the reconnect request function.

<**Notes**>

*1: Since processes such as the initial setup of the Bluetooth module are performed when the power is turned on, startup may take several seconds.

*2: When large amounts of data will be transferred from a host, perform control such as transfer time and transfer data amount adjustment on the user side so that the transfer data buffers on both the printer and host do not become full.

*3: The USB connector cannot be used for communication with a host.

Replacing the Interface Board

⚠ Caution

Always turn off the power to the printer before replacing the interface board. Do not pull it out with unnecessary force. This will cause an accident.

Replacement Method

1. **Remove the screws (2 nos) that the fixing the interface cover.**

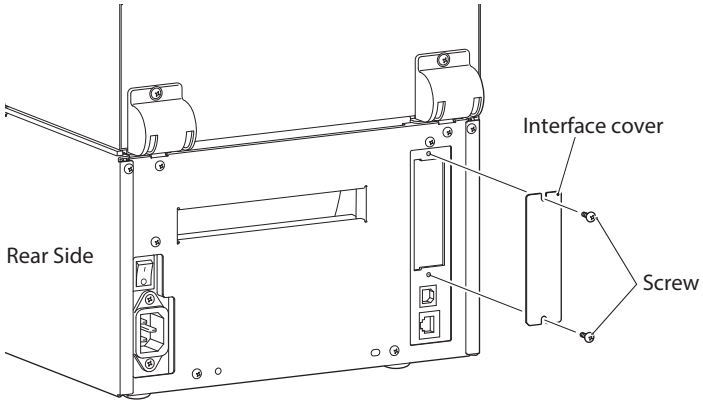

2. **Insert the interface port into the slot, and connect to the interface connector inside the printer.**

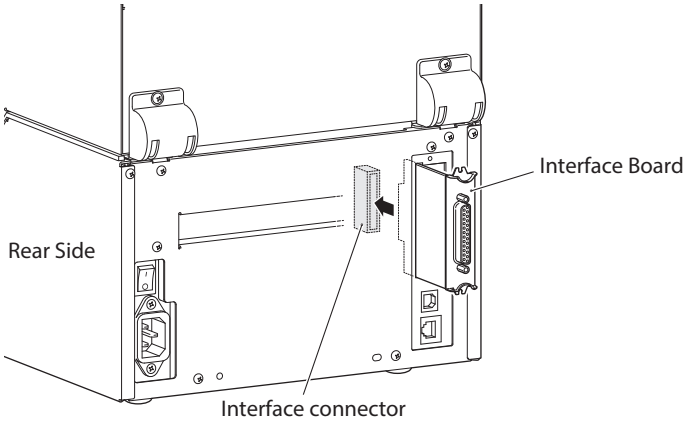

Replacing the Interface Board

3. **Fix the interface port to the printer by using the removed screw (2 nos).**

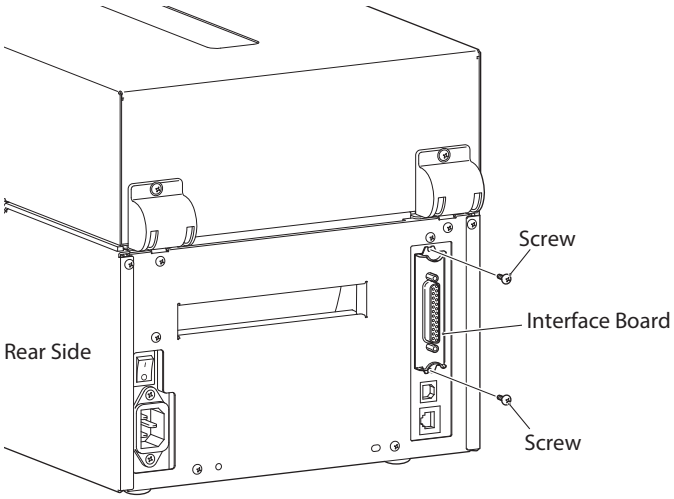

CITIZEN SYSTEMS AMERICA CORPORATION

1411 West 190th Street, Suite 675 Gardena, CA 90248
Tel: (310) 781-1460 Fax:(310) 781-9152
http://www.citizen-systems.com

CITIZEN SYSTEMS EUROPE GmbH

Otto-Hirsch-Brücken 17
70329 Stuttgart
Germany
Tel: +49 (0) 711 49032-0
Fax: +49 (0) 711 49032-45

Elizabeth House, 56-60 London Road
Staines-Upon-Thames, TW18 4HF
United Kingdom
Tel: +44 (0) 20 8893 1900
Fax: +44 (0) 20 8893 0080

http://www.citizen-europe.com

CITIZEN SYSTEMS JAPAN CO., LTD.

6-1-12, Tanashi-cho, Nishi-Tokyo-shi Tokyo, 188-8511. Japan
Tel: +81 (0) 42 468 4608 Fax:+81 (0) 42 468 4687
https://www.citizen-systems.co.jp/printer/

CL-E7xx_UM_241EN
December 2022
PMC-2210