CITIZEN

# Thermal Transfer Barcode & Label Printer

## CL-S700 III/CL-S703 III/ CL-S700 III R

# User's Manual

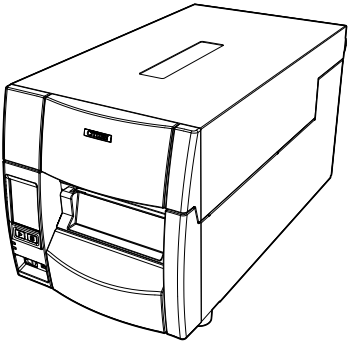

CL-S700 III
CL-S703 III

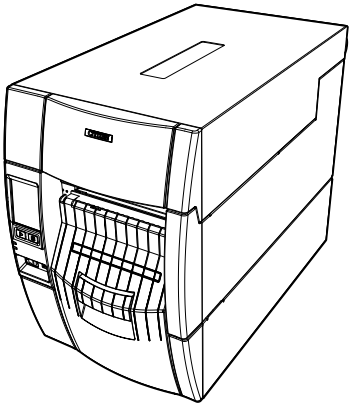

CL-S700III R

CITIZEN SYSTEMS JAPAN CO., LTD.

# WEEE MARK

**En** If you want to dispose of this product, do not mix it with general household waste. There is a separate collection systems for used electronics products in accordance with legislation under the WEEE Directive and is effective only within European Union.

**Ge** Wenn Sie dieses Produkt entsorgen wollen, dann tun Sie dies bitte nicht zusammen mit dem Haushaltsmüll. Es gibt im Rahmen der WEEE-Direktive innerhalb der Europäischen Union gesetzliche Bestimmungen für separate Sammelsysteme für gebrauchte elektronische Geräte und Produkte.

**Fr** Si vous souhaitez vous débarrasser de cet appareil, ne le mettez pas à la poubelle avec vos ordures ménagères. Il existe un système de récupération distinct pour les vieux appareils électroniques conformément à la législation WEEE sur le recyclage des déchets des équipements électriques et électroniques qui est uniquement valable dans les pays de l'Union européenne. Les appareils et les machines électriques et électroniques contiennent souvent des matières dangereuses pour l'homme et l'environnement si vous les utilisez et vous vous en débarrassez de façon inappropriée.

**Sp** Si desea deshacerse de este producto, no lo mezcle con residuos domésticos de carácter general. Existe un sistema de recogida selectiva de aparatos electrónicos usados, según establece la legislación prevista por la sobre residuos de aparatos eléctricos y electrónicos (RAEE), vigente únicamente en la Unión Europea.

**It** Se desiderate gettare via questo prodotto, non mescolatelo ai rifiuti generici di casa. Esiste un sistema di raccolta separato per i prodotti elettronici usati in conformità alla legislazione RAEE, valida solo all'interno dell'Unione Europea.

**Du** Deponeer dit product niet bij het gewone huishoudelijk afval wanneer u het wilt verwijderen. Er bestaat ingevolge de WEEE-richtlijn een speciaal wettelijk voorgeschreven verzamelsysteem voor gebruikte elektronische producten, welk alleen geldt binnen de Europese Unie.

**Da** Hvis du vil skille dig af med dette produkt, må du ikke smide det ud sammen med dit almindelige husholdningsaffald. Der findes et separat indsamlingssystem for udtjente elektroniske produkter i overensstemmelse med lovgivningen under WEEE-direktivet, som kun er gældende i den Europæiske Union.

**Por** Se quiser deitar fora este produto, não o misture com o lixo comum. De acordo com a legislação que decorre da Directiva REEE – Resíduos de Equipamentos Eléctricos e Electrónicos, existe um sistema de recolha separado para os equipamentos electrónicos fora de uso, em vigor apenas na União Europeia.

**Pol** Jeżeli zamierzasz pozbyć się tego produktu, nie wyrzucaj go razem ze zwykłymi domowymi odpadkami. Według dyrektywy WEEE obowiązującej w Unii Europejskiej dla używanych produktów elektronicznych należy stosować oddzielne sposoby utylizacji.

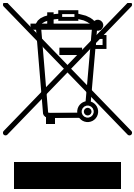

# COMPLIANCE STATEMENT FOR EUROPEAN USERS

CE marking shows conformity to the following criteria and provisions:

Low Voltage Directive (2014/35/EU), EMC Directive (2014/30/EU), and RoHS directive (2011/65/EU)

Full text of the EU declaration of conformity is available at the following internet address:

http://www.citizen-systems.co.jp/en/printer/download/eu_doc.html

# FCC COMPLIANCE STATEMENT FOR AMERICAN USERS

This equipment has been tested and found to comply with the limits for a Class A digital device, pursuant to Part 15 of the FCC Rules. These limits are designed to provide reasonable protection against harmful interference when the equipment is operated in a commercial environment.

This equipment generates, uses, and can radiate radio frequency energy and, if not installed and used in accordance with the instruction manual, may cause harmful interference to radio communications.

Operation of this equipment in a residential area is likely to cause harmful interference in which case the user will be required to correct the interference at his own expense.

# EMI COMPLIANCE STATEMENT FOR CANADIAN USERS

**This Class A digital apparatus complies with Canadian ICES-003.**

This equipment generates and uses radio frequency energy and if not installed and used properly, that is, in strict accordance with the manufacturer's instructions, may cause interference to radio and television reception. This digital apparatus does not exceed the Class A limits for radio noise emissions from digital apparatus set out in the Radio Interference Regulations of the Canadian Department of Communications. This equipment is designed to provide reasonable protection against such interference in a residential installation. However, there is no guarantee that interference will not occur in a particular installation. If this equipment does cause interference to radio or television reception, which can be determined by turning the equipment off and on, the user is encouraged to try to correct the interference by one or more of the following measures:

- Reorient or relocate the receiving antenna.
- Increase the separation between the equipment and receiver.
- Connect the equipment into an outlet on a circuit different from that to which the receiver is connected.
- Consult the dealer or an experienced radio/TV technician for help.

**CAUTION:**

Use shielded cables to connect this device to computers.

Any changes or modifications not expressly approved by the grantee of this device could void the user's authority to operate the equipment.

# ETAT DE CONFORMITE EMI A L'USAGE DES UTILISATEURS CANADIENS

**Cet appareil numérique de la classe A est conforme à la norme NMB-003 du Canada.**

Cet équipment produit et utilise l'énergie à radiofréquences et s'iln'est pas installé et utilisé correctment, c'esst à dire en accord strict avec les instructions du fabricant, il risque de provoquer des intérferences avec la réception de la radio et de latélévision.

Le présent appareil numérique n'émet pas de bruite radio électriques dépassant les limites applicables aux appareils numériques de la classe A prescrites dans le Réglement sur le brouillage radioélectrique édicté par le ministère des Communications du Canada.

Cet équipment est conçu pour fournir une protection satisfaisante contre de telles interférences dans une installation résidentielle. Cependant, il n'y a pas de garantie contre les interférences avec les réceptions radio ou télévision, provoquées par la mise en et hors circuit de l'équipment; aussi, il est demandé a l'utilisateur d'essayer de corriger l'interférence par l'une ou plus des mesures suivantes:

- Réorienter l'antenne de réception.
- Installer l'ordinateur autre part, par égard pour le récepteur.
- Brancher l'ordinateur dans une prise de courant différente de façon à ce que l'ordinateur et le récepteur soient branchés sur des circuits différents.

# IMPORTANT SAFETY INSTRUCTIONS

- Read all of these instructions and save them for later reference.
- Follow all warnings and instructions marked on the product.
- Unplug this product from the wall outlet before cleaning. Do not use liquid or aerosol cleaners. Use a damp cloth for cleaning.
- Do not use this product near water.
- Do not place this product on an unstable cart, stand or table. The product may fall, causing serious damage to the product.
- Slots and openings on the cabinet and the back or bottom are provided for ventilation.

  To ensure reliable operation of the product and to protect it from overheating, do not block or cover these openings. The openings should never be blocked by placing the product on a bed, sofa, rug or other similar surface. This product should never be placed near or over a radiator or heat register. This product should not be placed in a built-in installation unless proper ventilation is provided.
- This product should be operated from the type of power source indicated on the marking label.

  If you are not sure of the type of power available, consult your dealer or local power company.
- This product is equipped with a three-pronged plug, a plug having a third (grounding) pin. This plug will only fit into a grounding-type power outlet. This is a safety feature. If you are unable to insert the plug into the outlet, contact your electrician to replace your obsolete outlet. Do not defeat the safety purpose of the grounding-type plug.
- Do not allow anything to rest on the power cord. Do not locate this product where the cord will be walked on.
- If an extension cord is used with this product, make sure that the total of the ampere ratings on the products plugged into the extension cord do not exceed the extension cord ampere rating. Also, make sure that the total of all products plugged into the wall outlet does not exceed 15 amperes for 120V outlet and 7.5 amperes for 220V-240V outlet.
- Never push objects of any kind into this product through cabinet slots as they may touch dangerous voltage points or short out parts that could result in a risk of fire or electric shock. Never spill liquid of any kind on the product.
- Except as explained elsewhere in this manual, don't attempt to service this product yourself. Opening and removing those covers that are marked "Do Not Remove" may expose you to dangerous voltage points or other risks. Refer all servicing on those compartments to service personnel.

- The mains plug on this equipment must be used to disconnect mains power. Please ensure that the socket outlet is installed near the equipment and shall be easily accessible.
- Unplug this product from the wall outlet and refer servicing to qualified service personnel under the following conditions:

  A. When the power cord or plug is damaged or frayed.

  B. If liquid has been spilled into the product.

  C. If the product has been exposed to rain or water.

  D. If the product does not operate normally when the operating instructions are followed. Adjust only those controls that are covered by the operating instructions since improper adjustment of other controls may result in damage and will often require extensive work by a qualified technician to restore the product to normal operation.

  E. If the product has been dropped or the cabinet has been damaged.

  F. If the product exhibits a distinct change in performance, indicating a need for service.

# NOTICE

- Before use, be sure to read this manual. And keep it handy for reference when needed.
- The contents of this manual may change without prior notice.
- Reproduction, transfer, or transmission of the contents of this manual without prior consent is strictly prohibited.
- We are not liable for any damage resulting from the use of the information contained herein, regardless of errors, omissions, or misprints.
- We are not liable for any problems resulting from the use of optional products and consumable supplies other than the designated products contained herein.
- Do not handle, disassemble or repair the parts other than those specified in this manual.
- We are not liable for any damage caused by user's erroneous use of the printer and inadequate environment.
- Data residing in the printer is temporary. Therefore, all data will be lost if power is lost. We are not liable for any damage or loss of profits caused by data loss due to failures, repairs, inspections, etc.
- Please contact us if there are any mistakes or ambiguities within this manual.
- If there are missing or incorrectly collated pages in this manual, contact us to obtain a new manual.

Visit the following site to get documentation, drivers, utilities, and other information.

https://www.citizen-systems.co.jp/en/printer

- CITIZEN is a registered trademark of Citizen Watch Co., Ltd.
- Datamax®, I-Class™, and Prodigy Plus® are registered trademarks or trademarks of Datamax-O'Neil Corporation in the U.S.
- Zebra®, Eltron®, ZPL2™, and EPL2™ are registered trademarks of ZIH Corp., USA
- Ethernet is a registered trademark of Fuji Xerox Corporation.
- Maxi Code is a registered trademark of United Parcel Service, Inc. in the U.S.
- QR Code is a registered trademark of DENSO WAVE Incorporated.
- PDF417 is a trademark or registered trademark of Motorola, Inc. in the U.S. and other countries.
- TrueType™ is a trademark of Apple Inc.
- UFST™, CG Triumvirate™, and CG Triumvirate Condensed Bold™ are trademarks of Monotype Imaging, Inc.
- BarTender is a registered trademark of SEAGULL SCIENTIFIC, INC.
- In this product, "Noto Sans Display Medium," "Noto Sans Display Regular," "Noto Sans Display SemiCondensed Regular," "Notosans CJK JP Medium," "Notosans CJK JP Regular," "CS Sans CJK JP," "CS Sans CJK SC," and "CS Sans CJK KR" (https://scripts.sil.org/cms/scripts/page.php?item_id=OFL_web) are used.
- In this product, "Fugue" by Kyoto Software Research, Inc. is included as the file system function.

This product uses Fugue file system from Kyoto Software Research Inc.

- All other trademarks are the property of their respective owners.
- Citizen Systems use these trademarks in accordance with the license of relevant owners.

Copyright© CITIZEN SYSTEMS JAPAN CO., LTD. 2023

# License Notice

This product incorporates open source software (hereinafter referred to as OSS) that we use under license agreement with the copyright holders in addition to software for which CITIZEN SYSTEMS hold the rights. We are obligated to inform you about copyright notices, license terms, and other information in accordance with the terms of these licenses.

1. The source code of each OSS incorporated into this product that is applicable to either GNU General Public License or GNU Lesser General Public License is made available in accordance with the licensing terms of the respective license. If you wish to copy, modify, or distribute the applicable OSS, download the source code from the following URL.

   **https://www.citizen-systems.co.jp/en/printer/download/oss/cl-s70xiii/download/**

   The applicable OSS is provided “as is” without warranty of any kind from us. Furthermore, the period of source code availability is until three years after the end of sales of this product. Please note that we are unable to answer any questions about the source code.
2. A list of the OSS incorporated into this product and the full text of each corresponding license can be viewed from the following URL.

   **https://www.citizen-systems.co.jp/en/printer/download/oss/cl-s70xiii/license/**

# SAFETY PRECAUTIONS...WHICH SHOULD BE STRICTLY OBSERVED

- To prevent personal injury or property damage, the following shall be strictly observed.
- The degree of possible injury and damage due to incorrect use or improperly following instructions is described below.

| Warning |
| --- |
| Indicates a situation which, if not observed and handled properly, could result in death or serious injury. |

| Caution |
| --- |
| Indicates a situation which, if not observed and handled properly, could result in injury. |

: This is a mark to call attention to the reader.

# Warnings

## Warning

- Never perform the following. If not avoided, these may cause damage or trouble to the printer or cause the printer to overheat and release smoke and cause burns or an electrical shock. If the printer is damaged or is malfunctioning, be sure to turn the printer off immediately and remove the power cord from the outlet, then consult our service personnel.
  - Do not place the printer in a poorly ventilated area, or shut off the air vent of the printer.
  - Do not place the printer where chemical reactions occur, such as in laboratories or where air is mixed with salt or gas.
  - Do not use a power voltage or frequency other than those specified.
  - Do not plug/unplug the power cord or attach/detach the interface cable by simply grabbing the power cord or interface cable. Do not pull or carry the printer when the tension of the power cord or interface cable is increased.
  - Do not drop or put foreign matter such as clips and pins into the printer. This may cause problems.
  - Do not plug the power cord into an outlet with many loads.
  - Do not spill drinks such as tea, coffee and juice on the printer or spray insecticide on the printer.

    If drink or water is spilled, first be sure to turn the power off and remove the power cord from the outlet, then consult our service personnel.
  - Do not disassemble or modify the printer.
- Discard or safely store the plastic packing bag. This bag should be kept away from children. If the bag is pulled over a child's head, it may cause suffocation.

# General Precautions

## Caution

**Observe these precautions to ensure proper use of the device. Make sure to read these precautions.**

- Do not touch the area around the thermal head during or right after the printing process. This area will be hot and may cause burns.
- Prior to operation, read the safety instructions carefully and observe them.
- Do not drop or put foreign matter such as clips and pins into the printer. This may cause problems.
- Be careful when moving or carrying the printer. Dropping the printer may cause injury or property damage.
- Make sure if you open the top cover, it is opened all the way. If only partially open, the cover could slam shut, possibly causing injury.
- When the cover is open, be careful of the corners of the cover. They could cause injury.
- Do not open the printer during printing.
- When cleaning the surface of the printer case, do not use the cloth that is soaked in thinner, trichloroethylene, benzine, ketone or similar chemicals.
- Do not use the printer where there is a lot of oil, iron particles, or dust.
- Do not spill liquids or spray insecticide on the printer.
- Do not jolt or impact to the printer by stepping on, dropping or hitting the printer.
- Operate the control panel properly. A careless, rough handling may cause problems or malfunction.

  Do not use such sharp-edged tool as a ballpoint pen for operation.
- Be careful of the edges of the plates so injury or property damage is possible.
- If a problem occurs during printing, stop the printer immediately and unplug the power cord from the outlet.
- When printer trouble occurs, do not try to dissemble it. Instead, consult our service personnel.

# Precautions When Installing the Printer

## Caution

- Prior to operation, read the safety instructions carefully and observe them.
- Do not use or store the printer near fire, excessive moisture, in direct sunlight, near an air conditioner or heater or other source of unusually high or low temperature or humidity or excessive dust.
- Do not place the printer where chemical reactions occur, such as in a laboratory.
- Do not place the printer where air is mixed with salt or gas.
- The printer must sit on a firm, level surface where there is ample ventilation. Never allow the printer's air vent to be blocked by a wall or other object.
- Do not put anything on the top of printer.
- Do not place the printer near a radio or television, and do not use the same wall outlet for the printer and radio or television. Radio or television reception could be adversely affected.
- Use the power cord supplied with the product. Never use the power cord for other product.
- Do not put anything on the power cord or step on it.
- Do not drag or carry the printer with the power cord or interface cable.
- Avoid plugging the power cord into an outlet with many loads.
- Do not bundle the power cord when inserting the plug.
- Always grip the plug housing, not the cord, to plug/unplug the power cord.
- Make certain the power is turned off before connecting/disconnecting the interface cable.
- Avoid lengthening the signal cable or connecting it to any noise-producing device. If it is unavoidable, use the shielded cable or twisted pair for each signal.
- Place the printer near the outlet where the power cord can be unplugged easily to shut off power.
- Use the AC outlet that accepts a three-pronged plug. Otherwise, static electricity may be generated and there will be danger of electric shock.

# THE TABLE OF CONTENTS

**1. INTRODUCTION ..... 17**

1.1 Main Features ..... 17

**2. Setup ..... 19**

2.1 Confirmation of Carton Contents ..... 19
2.2 Part Names and Functions ..... 21
2.3 Connection to Power ..... 28
2.4 Driver Installation ..... 29
2.5 Connection to a Computer ..... 30

**3. Printer Operation ..... 31**

3.1 Power ON/OFF ..... 31
3.2 Normal Operating Mode ..... 32
3.3 LED Functions ..... 34
3.4 Table of Alarm and Error Indications ..... 35
3.5 List of Status Display Contents ..... 36
3.6 Setting the Media ..... 37
3.7 Setting the Ribbon ..... 48
3.8 Mode Settings ..... 52
3.9 Emulation Auto-Detection ..... 86
3.10 Calibrating the Touch Panel ..... 88
3.11 Setting the menu for the Rewinder (CL-S700 III R only) ..... 89

**4. Printer Adjustments ..... 90**

4.1 Sensor Adjustments ..... 90
4.2 Media Thickness Adjustment ..... 97
4.3 Media Width Adjustment ..... 99
4.4 Adjusting the Ribbon ..... 101
4.5 Adjustable Sensor Position Adjustment ..... 104
4.6 Cleaning ..... 105

**5. Troubleshooting ..... 107**

**6. Appendixes ..... 111**

6.1 Specifications ..... 111
6.2 Interfaces ..... 120

# 1. INTRODUCTION

Thank you for purchasing the Citizen Thermal Transfer Printer. This printer is a product that can be used for labels, tags, tickets, and many other applications.

## 1.1 Main Features

**<Color Touch Panel>**

A color touch panel is provided as the control panel. Ease of use has been greatly improved by using GUI operations. Also, when there is an error or alert, the corrective action is displayed with an illustration, so that more intuitive operation is enabled.

**<Easy Access - Easy Operation>**

The printer is designed for all day-to-day operations to be accessible from the front of the printer so there is no need to move items near to the printer for access for media loading. The power switch is located in a recessed panel at the front of the printer so it can be easily accessed without moving the printer.

**<Space-Saving Printer Design>**

The top cover on the control panel side opens widely, directly upward, so it does not require extra space on the side of the printer. Also, when replacing the media (labels) or ribbons, the top cover can be opened and closed without moving anything around the printer.

**<The Easiest Media Loading>**

The Hi-Lift™ metal print head mechanism opens so that it is completely clear of the media path so that the paper and ribbons can be loaded without any part of the printer in the way.

**<Flexible Media Usage>**

The printer features an adjustable media sensor which allows the customer to use any type of media. The media (label) rolls can be inside or outside would. Similarly, the ink ribbon can be wound either way: ‘ink in’ or ‘in out’.

**<Optimum Ribbon Tension>**

The patented ARCP™ function - Active Ribbon Control and Positioning - maintains even ribbon tension from beginning to end of a ribbon. This eliminates ribbon wrinkle

and improves print positioning, especially for small labels. Smudging caused by ribbon slippage is also removed.

**<Multi Programming Language>**

This printer contains the Datamax®, Zebra® and Eltron® emulations and will automatically detect the language using the Cross-Emulation™ feature.

**<Interfaces and Options>**

In addition to USB, an Ethernet interface is provided as standard. In addition, optional interfaces can be installed. Serial, parallel, and wired/wireless LAN optional interfaces are available. In addition, an auto-cutter/peeling unit can be used as an option.

**<USB Host Function Provided as Standard>**

A USB memory or barcode scanner can be connected for importing data, so stand-alone printing (Forms Printing) can be carried out. In addition, saving and updating settings/updating firmware/registering printing templates can be performed easily using a USB memory.

**<Print Preview Function>**

Before printing, the print image can be simply displayed on the color touch panel for checking.

**<Easy Rewinder operation> (CL-S700 III R only)**

A built-in rewinder can be accessed from the control panel side of the printer, so the backing paper can be easily wound up.

# 2. Setup

## 2.1 Confirmation of Carton Contents

**Removing the Packing Material**

The printer is shipped with adhesive tape in place to hold the top cover closed. Simply remove the two pieces of tape on either side of the top cover. Then simply open the cover by lifting up and tipping it backwards.

There is another strip of adhesive tape that must be removed which holds the mechanism closed for shipping. Remove the tape and attached paper by carefully peeling from the plastic case.

Retain the tape should you need to transport the printer again. A further piece of packing paper is inside the mechanism and you can remove this when the head is opened as explained later in the manual.

Check that the following accessories are included with the printer in the carton.

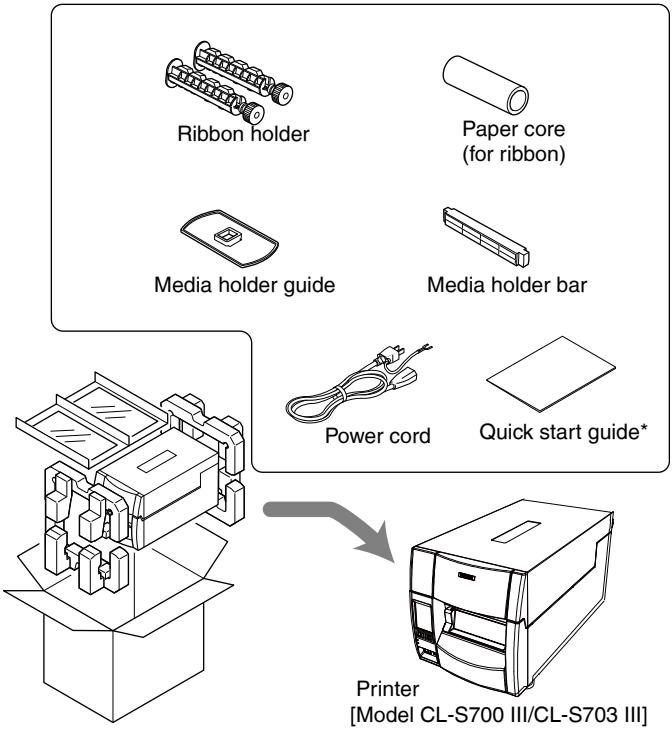

**Note:**

The empty carton and packing materials should be stored for future shipping of the printer.

When removing the CL-S700 III R from the box, there is the extra cardboard “sling” to make lifting easier.

* You can download the driver, SDK, utility and BarTender (label creation software) from the URL listed in the Quick start guide.

## Caution

- Be careful when moving or carrying the printer and when taking the printer out of the carton. The printer may cause injury or property damage if dropped.
- Be sure to grip the printer housing firmly when taking it out of the carton. Do not grip the printer by the foam packing material which may break, causing the printer to drop.
- When opening the cover, open it all the way. If only part way open, the cover could slam shut, possibly causing injury.
- Be careful of the edge of the cover when the cover is opened. It may cause injury or property damage.
- Be careful of the edges of the metal plates as injury or property damage is possible.

# 2.2 Part Names and Functions

**Inside the printer**

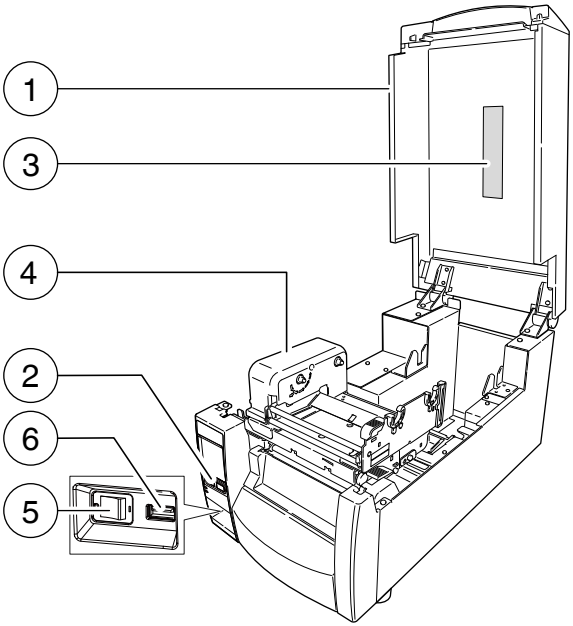


1: Top cover

Is opened vertically to set media or ribbon.

2: Operation panel

This is used to make changes and adjustments to the printer and its configuration.

**Refer to Operation Panel**

3: Top cover window

The amount of ribbon and media remaining can be checked through this window.

4: Ribbon drive unit

**Refer to 3.7 Setting the Ribbon**

5: Power switch

This is the power switch for the printer.

**Refer to 3.1 Power ON/OFF**

6: USB host connector

This is used to connect a USB memory or barcode scanner.

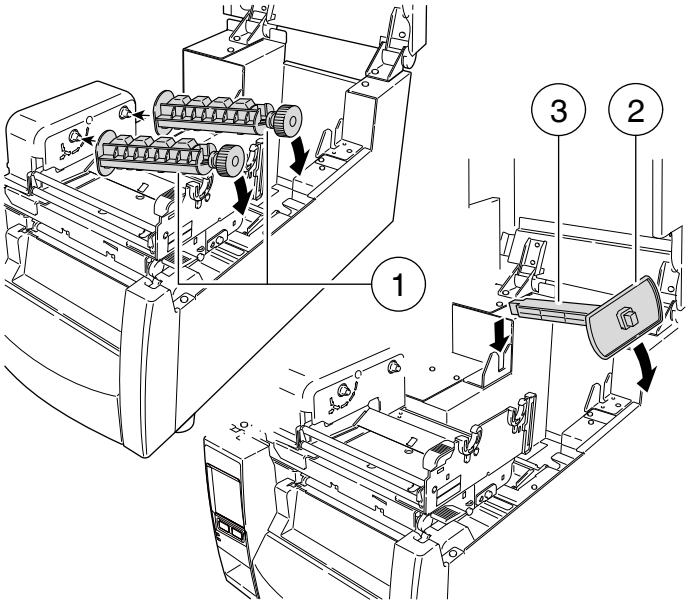


1: Ribbon holder

It is used to attach the ribbon and paper core.

2: Media holder guide

This guide is moved horizontally to match the media size.

The guide can be sliding it from the holder bar.

3: Media holder bar

The media is supported by the media holder bar when installed in the printer.

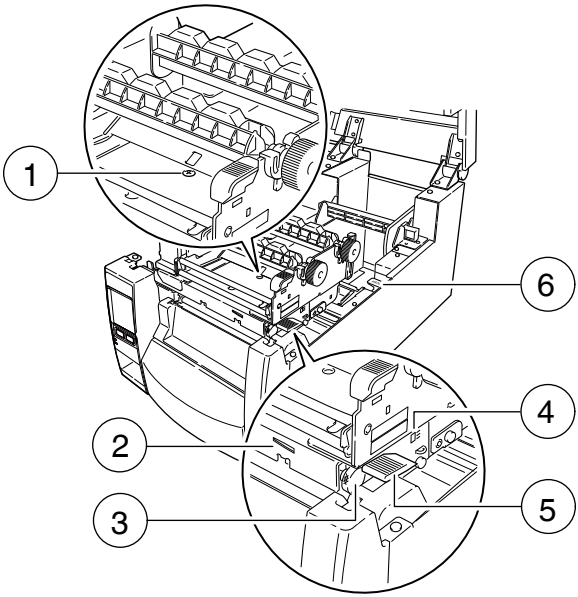


1: Media thickness adjustment screw

It is adjusted to match the thickness of the media.

**Refer to 4.2 Media Thickness Adjustment**

2: Media width adjustment indicator

3: Media width adjustment knob

It is adjusted to match the width of the media.

**Refer to 4.3 Media Width Adjustment**

4: Media thickness adjustment indicator

5: Head open lever

The head unit can be raised to install media by pushing this lever.

It locks the head unit during printing.

6: Sensor arm open lever

The sensor arm can be raised to install media by pushing this lever.

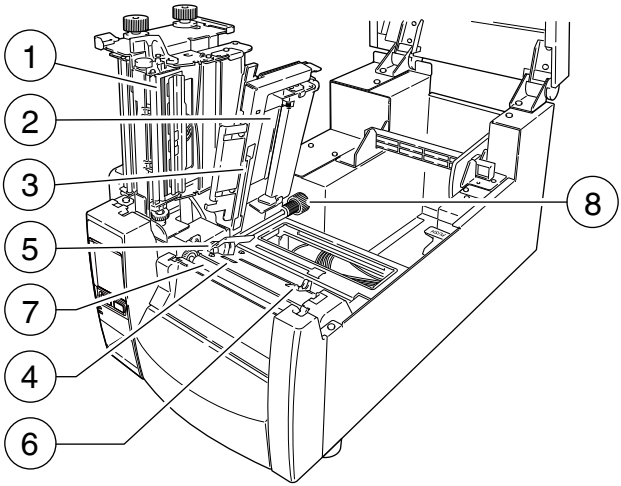


1: Thermal printhead

This is the printhead. Avoid touching this with your fingertips and leaving grease or dirt on the printhead surface.

2: Sensor arm

The media can be installed by raising this arm. The media can be held in place by lowering this arm.

3: Adjustable (rear) sensor

Detects the label or tag position.

**Refer to 4.1 Sensor Adjustments**

4: Fixed media sensor

Alternative method to detect the label or tag position. This sensor is more accurate for small labels as it is closer to the print head.

**Refer to 3.6 Setting the Media**

5: Left media guide

This is a fixed part of the printer. The left side of the media (labels, tags) as viewed from the front of the printer should be placed against this media guide.

6: Right, movable media guide

Slide the right media guide so that it just touches the media. It should “guide” the media through the printer. It should not hold it firmly otherwise the media will jam.

7: Platen

Interlocked with the thermal printhead, it feeds media backwards or forwards.

8: Adjustable sensor position knob

This is used to change the left-to-right position of the adjustable media sensor across the media. See 4. Printer Adjustments for more details.

**Refer to 4. Printer Adjustments**

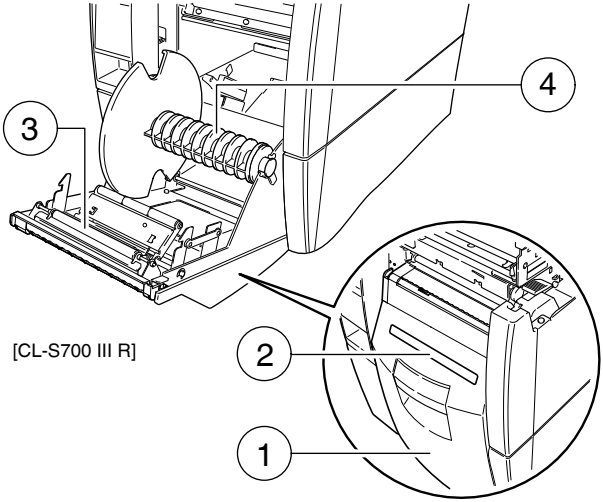


1: Rewinder cover

When using the rewinder function, open the door by pulling the opening handle on the front.

2: Media entry slit cover

When using in the winding up mode, remove this cover and pass the media (label) through.

3: Peeler rollers

The labels are peeled from the backing paper one by one.

4: Rewinder flange

The backing paper is wound up.

## Operation Panel

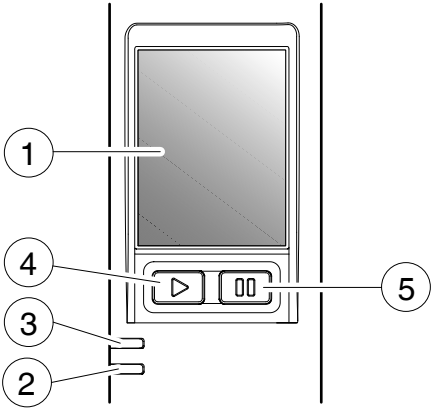


1: LCD display

This displays the operational status of the printer.

2: POWER LED

This is lit when the printer power is on. (green)

Refer to 3.3 LED Functions

3: ERROR LED

This is lit or flashes when the printer is in an alarm or error status. (orange)

Refer to 3.3 LED Functions

4: FEED key

This key feeds the media to the top of the next label or form.

5: PAUSE key

This stops printing or cancels the alarm.

## Rear View

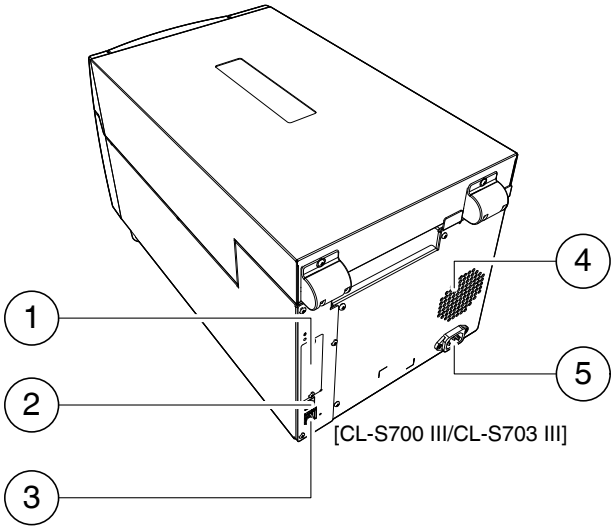


1: Option interface

Optional interface board can be installed by removing the interface cover. Contact your retailer if you want to use the option interface.

**Refer to Middle-range optional wired LAN/wireless LAN interface (IF1-EFXx, IF1-WFXx)**

**Refer to High-end optional wired LAN/wireless LAN interface (IF1-ESxx)**

2: USB interface (USB2.0)

This receives USB transmission of data from a host computer.

**Refer to USB Interface**

3: Wired LAN interface

Data from the host computer is received via wired LAN communication.

**Refer to Wired LAN interface**

4: Heat air opening

It allows warm air to vent from the printer.

Be sure not to block it with media etc.

5: Power cord inlet

The connector of the enclosed power cord is connected here.

Refer to 2.3 Connection to Power

## 2.3 Connection to Power

**1. The power switch is located on the front of the printer recessed below the control panel. Check that the power switch is turned OFF.**

**2. Insert the power cord in to the inlet on the printer.**

**3. Insert the plug of the power cord in the AC outlet.**

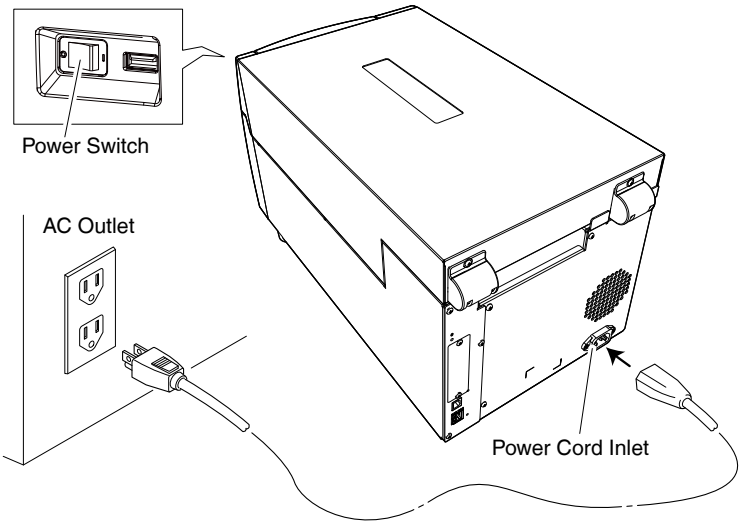


**Caution**

Use an AC outlet that accepts a three-pronged plug. Otherwise, static electricity may be generated and there will be danger of electric shock.

## 2.4 Driver Installation

Install the printer driver onto the host computer. Printer drivers are available for download from the Citizen Systems support website. The latest documentation, drivers, utilities, and other support information are also available from this website.

**https://www.citizen-systems.co.jp/en/printer/download/**

Once a printer driver has been downloaded, follow the on-screen instructions to install the driver.

# 2.5 Connection to a Computer

1. **Turn OFF both power switches of the printer and the computer.**

2. **Insert the cable into the appropriate interface port at the back of the printer.**
   **Tighten any locking screws to secure the cable.**

3. **Insert the other end of the cable into the appropriate interface port in the host computer.**
   **Tighten any locking screws to secure the cable.**

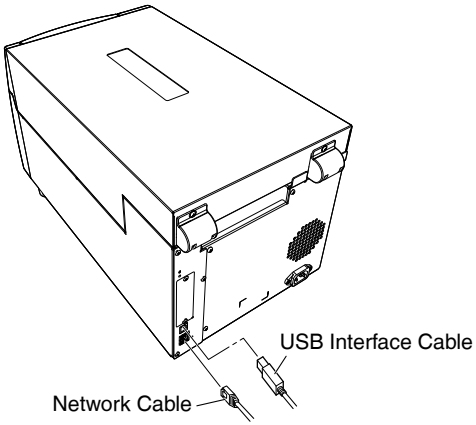


**Refer to USB Interface**

**Refer to Wired LAN interface**

**Caution**

Do not connect a USB cable to the wired LAN interface. Doing so may damage connectors.

**Notes**

Do not connect multiple interfaces at the same time.

# 3. Printer Operation

## 3.1 Power ON/OFF

### Turning on the power

1. **The power switch is conveniently located at the front of the printer for easy access during normal operation. It is in the recess underneath the control panel so it cannot be accidentally operated by mistake.**

2. **The POWER LED is lit.**

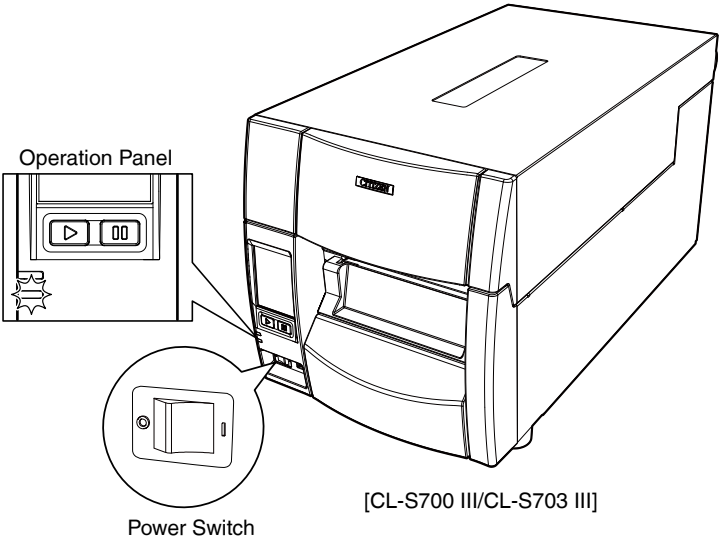


### Turning off the power

1. **Turn off the power switch of the printer.**

2. **The POWER LED goes off.**

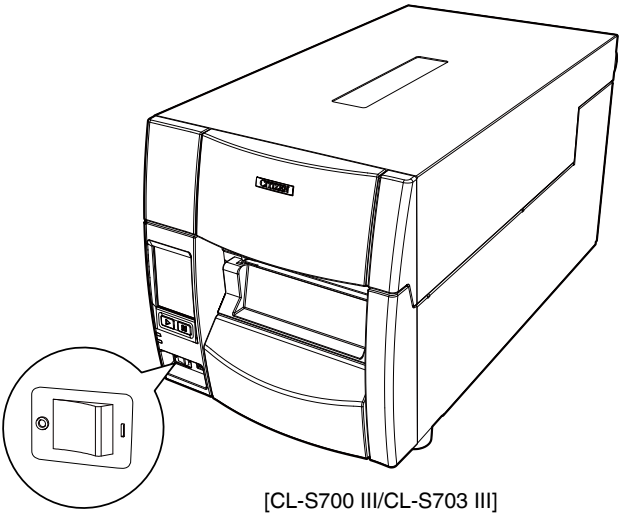


[CL-S700 III/CL-S703 III]

## 3.2 Normal Operating Mode

When the power is turned on, the printer enters normal operating mode. The control keys activate the following functions.

Refer to Menu settings

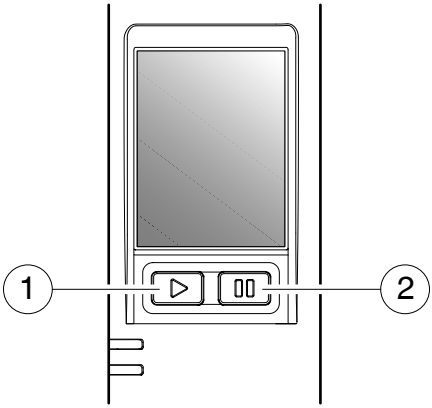


1: FEED key: Feeds media

- Pressing this key feeds media to the print start position. The distance it is fed is determined by automatically detecting the front end of the media when using

label media, and when continuous media has been designated, a fixed quantity is fed, then feeding stops.

- When the TEAR OFF setting is effective, feeding stops when the media has been fed to the TEAR OFF location.
- When the optional cutter unit is installed, the media is fed to the cut position then it is cut.
- If the optional peeler unit is installed, the media is fed to the peeling location. When the media is pausing at the peeling position, feeding does not occur, even if the FEED key is pushed.

2: PAUSE key: It stops printing and cancels the alarm

- When this key is pushed once, the LCD indicates “Pause” and the printer temporarily pauses.
- When this key is pushed once during printing, the printer will pause after printing the label has been completed.

  When the key is pushed again, printing is enabled, and the print data that has been received is printed. When the PAUSE key is pushed for four or more seconds while paused, the label print data for one batch can be canceled. (When canceled, “Job canceled” is displayed)
- Pushing this key once cancels the abnormal head resistance alarm.

# 3.3 LED Functions

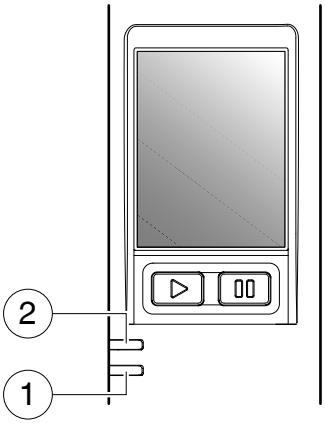


1: POWER LED

It lights up when printer power is turned on. (green)

2: ERROR LED

This is lit or flashes when the printer is in error status. (red)

# 3.4 Table of Alarm and Error Indications

When an abnormal condition is detected in the printer, an alarm sounds and ERROR LED either lights up or flashes to indicate the type of error. The LCD indicates the error message.

| Item | ERROR LED | LCD |
|---|---|---|
| Printing possible (no error) | OFF | Ready |
| Pause key on operation panel pressed | OFF | Pause |
| Head temperature - high temperature abnormality | Flashing | Head Hot |
| Head temperature - low temperature abnormality | Flashing | Head Cold |
| PF motor temperature abnormality | Flashing | PF Motor Hot |
| Cutter motor temperature abnormality | Flashing | Cut Moter Hot |
| USB host power supply abnormality | Flashing | USB Host Fail |
| Head open | Flashing | Head Open |
| Paper end | Flashing | Paper End |
| Paper out (paper position undetectable) | Flashing | Paper Load |
| Paper jam | Flashing | Paper Jam |
| Head low resistance value abnormality | Flashing | Head Check |
| Ribbon end | Flashing | Ribbon End |
| Communication error (receiving buffer overrun) | Flashing | Serial Over Run |
| Communication error (parity) | Flashing | Serial Parity |
| Communication error (framing) | Flashing | Serial Framing |
| Auto-cutter abnormality (foreign object etc.) | Flashing | Cutter Fail |
| Fan motor malfunction | Flashing | Fan Lock |
| Rewinder Hot (CL-S700 III R only) | Flashing | Rewinder Hot |
| Rewinder full (CL-S700 III R only) | Flashing | Rewind Full |
| Rewinder cover open (CL-S700 III R only) | Flashing | Rewind Open |
| Rewind fail (CL-S700 III R only) | Flashing | Rewind Fail |

# 3.5 List of Status Display Contents

Icons are displayed on the top of the top screen for items such as the interface during communication, printer operation mode, and connection status of peripheral devices.

**List of Status Display Contents:**

| Icon | Item details |
|---|---|
| | Displayed when the printer is receiving data. |
| | Displayed when the printer built-in USB is connected to an external device. |
| | Displayed when a LAN cable is connected to the printer built-in wired LAN connector, and communication is enabled in accordance with the IP address. |
| | Displayed when a wired LAN interface (optional) is installed, and communication is enabled in accordance with the IP address. |
| | Displayed when a wireless LAN interface (optional) is installed, and communication is enabled in accordance with the IP address. |
| | Displayed when a serial interface (optional) board is installed on the printer. |
| | Displayed when a parallel interface (optional) board is installed on the printer. |
| HEX | Displayed during HEX dump mode. |
| | Displayed when Preview Mode is set to On. |
| | Displayed when a USB memory is connected to the printer USB host. |
| | Displayed when a device such as a scanner is connected to the printer USB host. |
| | Displayed when the Keyboard Lock is set to On. |

# 3.6 Setting the Media

## Media Sizes

The position of label and tag media is sensed by either a label detection sensor (Transparent sensor) or a black mark detection sensor (Reflective sensor).

Label detection sensor (Transparent sensor): Detects the gaps between label media and notches of tag media

Black mark detection sensor (Reflective sensor): Detects the black mark

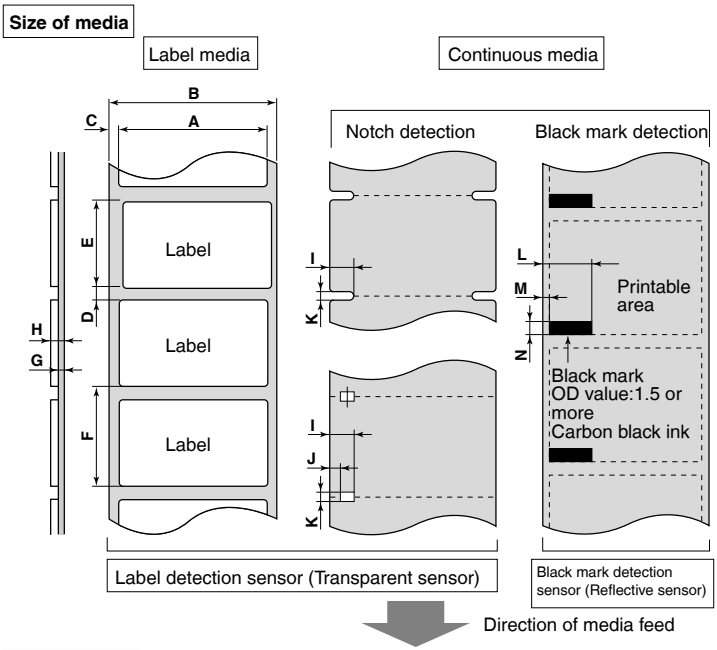


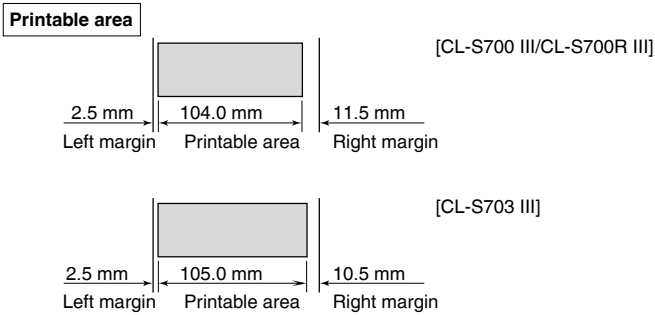

## Print Positioning Accuracy

### Print positioning accuracy of the head position

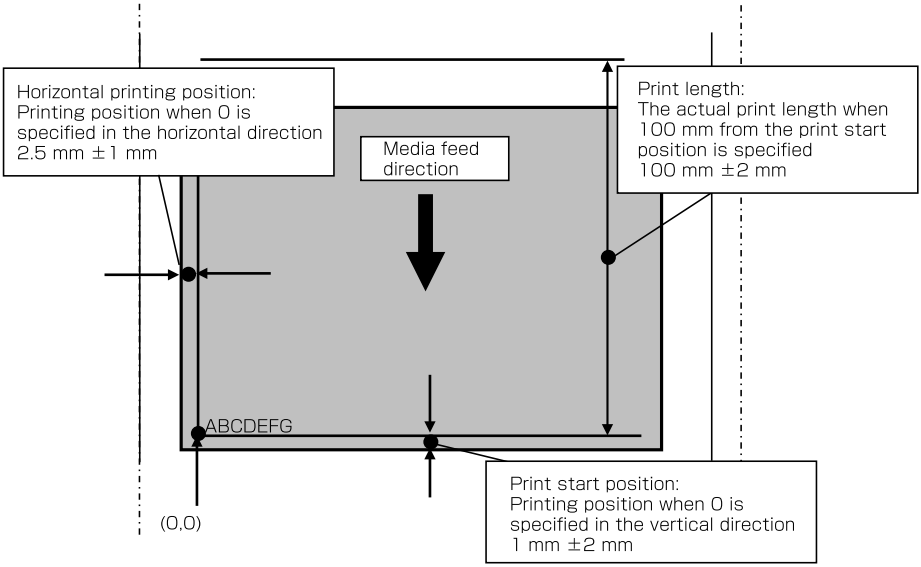


## When Using Front Sensors

| | | Minimum value | | Maximum value | |
|---|---|---|---|---|---|
| | | mm | (inch) | mm | (inch) |
| A | Label width | 7.62 | (0.3) | 118.00 | (4.65) |
| B | Liner width | 25.4 | (1.0) | 118.00 | (4.65) |
| C | Left end of label | 0 | (0) | 2.54 | (0.10) |
| D | Gap between labels | 2.54 | (0.10) | 2539.70* | (99.99*) |
| E | Label length | 2.54 | (0.10) | 2539.70* | (99.99*) |
| F | Label pitch | 6.35 | (0.25) | 2539.70* | (99.99*) |
| G | Liner thickness | 0.06 | (0.0025) | 0.125 | (0.0049) |
| H | Media thickness | 0.06 | (0.0025) | 0.25 | (0.01) |
| I | Right end of notch | 8.3 | (0.32) | 11 | (0.43) |
| J | Left end of notch | 0 | (0) | 4.7 | (0.19) |
| K | Notch length | 2.54 | (0.10) | 17.80 | (0.70) |
| L | Right end of black mark | 15.00 | (0.59) | - | - |
| M | Left end of black mark | 0 | (0) | 1.5 | (0.06) |
| N | Black mark width | 3.18 | (0.125) | 17.80 | (0.70) |

- Use a label detection sensor (Transparent sensor) for label media gaps and media with black marks.
- Use the continuous media detection sensor (reflective sensor) for continuous media with no notches or black marks.
- Use a label detection sensor (Transparent sensor) for fan fold media.

- If the label pitch is 1 inch or less, set the Small Media Adjustment menu to ON and match it to the label that uses the value of the Small Media Length menu.

* For CL-S703 III, the value is 1625.60 mm (64.00 inch)

Refer to List of Settings

### When Using Adjustable Sensor

| | | Minimum value | | Maximum value | |
|---|---|---|---|---|---|
| | | mm | (inch) | mm | (inch) |
| A | Label width | 25.4 | (1.0) | 118.00 | (4.65) |
| B | Liner width | 25.4 | (1.0) | 118.00 | (4.65) |
| C | Left end of label | 0 | (0) | 2.54 | (0.10) |
| D | Gap between labels | 2.54 | (0.10) | 2539.70* | (99.99*) |
| E | Label length | 12.70 | (0.50) | 2539.70* | (99.99*) |
| F | Label pitch | 12.70 | (0.50) | 2539.70* | (99.99*) |
| G | Liner thickness | 0.06 | (0.0025) | 0.125 | (0.0049) |
| H | Media thickness | 0.06 | (0.0025) | 0.25 | (0.01) |
| I | Right end of notch | 3.6 | (0.14) | 60.8 | (2.39) |
| J | Left end of notch | 0 | (0) | 57.2 | (2.25) |
| K | Notch length | 2.54 | (0.10) | 17.80 | (0.70) |
| L | Right end of black mark | 15.00 | (0.59) | 66.5 | (2.62) |
| M | Left end of black mark | 0 | (0) | 51.5 | (2.02) |
| N | Black mark width | 3.18 | (0.125) | 17.80 | (0.70) |

- Use a label detection sensor (Transparent sensor) for label media gaps and media with black marks.
- Use the continuous media detection sensor (reflective sensor) for continuous media with no notches or black marks.
- Use a label detection sensor (Transparent sensor) for fan fold media.
- If the label pitch is 1 inch or less, set the Small Media Adjustment menu to ON and match it to the label that uses the value of the Small Media Length menu.

* For CL-S703 III, the value is 1625.60 mm (64.00 inch)

Refer to List of Settings

## Loading roll media

1. **Push the large blue head-open lever to release the head unit, and then lift the sensor arm by hand as shown below.**

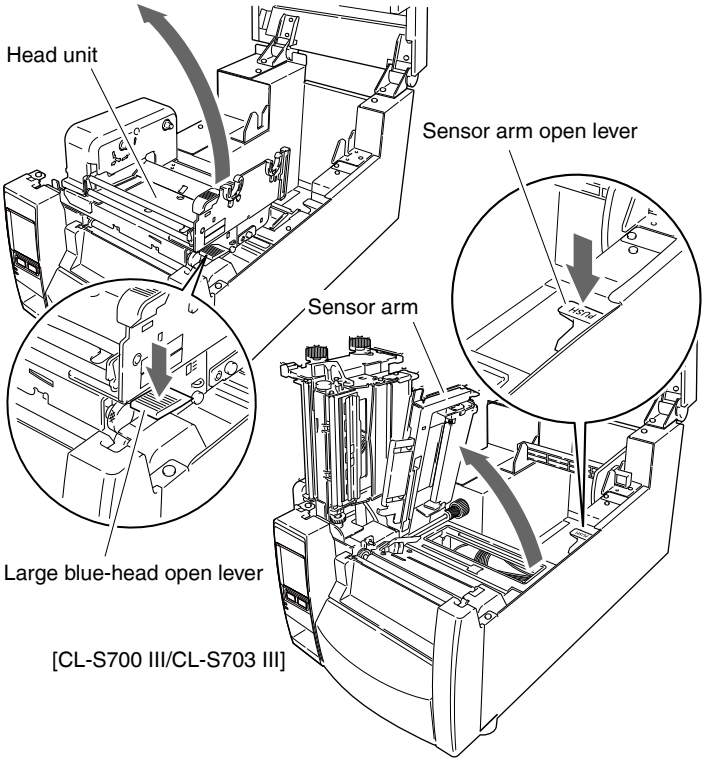


**Caution**

Note the following precautions when the head unit is open.

- Do not touch the thermal head.

2. **Firstly, slide the two black plastic parts of the media holder assembly together. Ensure correct alignment of the guide with the bar as it can only be installed in one direction.**

3. **Slide the roll of media over the media bar. The media guide must be on the right side of the roll of media (as viewed from the front of the printer) with the flat surface of the media guide touching the roll.**

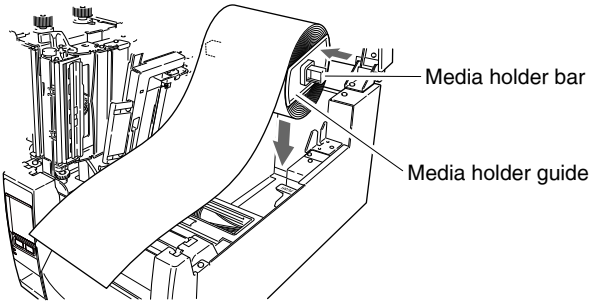


**Refer to Media Sizes**

4. **Set the media roll and media holder in to the printer as shown above. It is advisable to pull a length of media forwards and through the mechanism ready for later positioning.**

5. **Move the media roll so it is touching the left side of the housing. Then slide the black movable media guide so it is touching the media on the right side.**

| **Caution** |
|---|
| Do not try to hold the media too tightly with these guides as it will cause the printer to jam during printing. |

6. **Align the media with the left fixed media guide (2 locations), align the right movable media guide with the media width, and lower the sensor arm which loosely holds the media in position.**

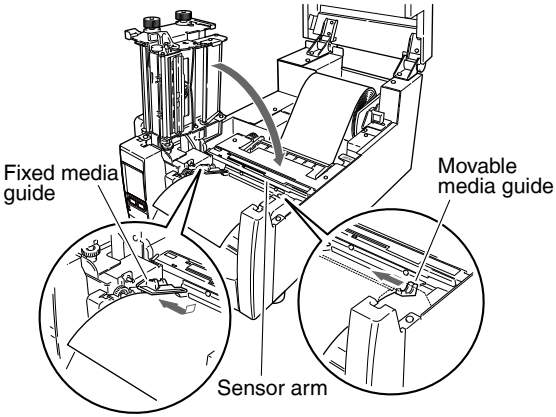

7. **Lower the head unit back down to the closed position. Push the head close knob firmly to close and lock the mechanism.**

   **The mechanism is only locked correctly when you head a “click”.**

   **Align it with the width of the media that has been set, then set the media width adjustment screw and the media thickness adjustment knob. See “4. Printer Adjustments”.**

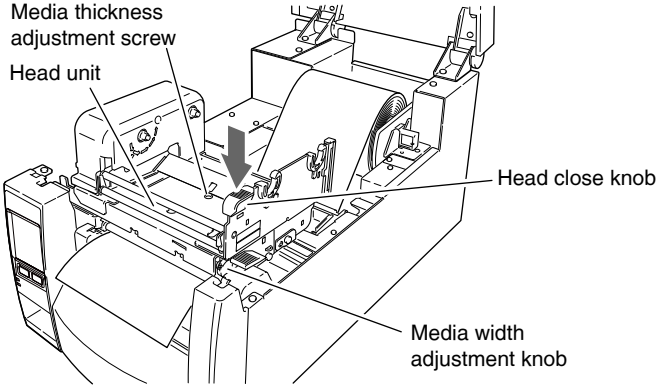


**Refer to 4.2 Media Thickness Adjustment**

**Refer to 4.3 Media Width Adjustment**

8. **Selecting the sensor**

   **Select the sensor to be used from “Setup” on the menu screen -> “Sensor Setup” -> “Media Sensor.”**

**Refer to Menu settings**

9. **Push the FEED key to feed the media. It will halt at the next print start position.**

## Loading fanfold media

1. **Push the large blue head-open lever to release the head unit, and then lift the sensor arm by hand as shown below.**

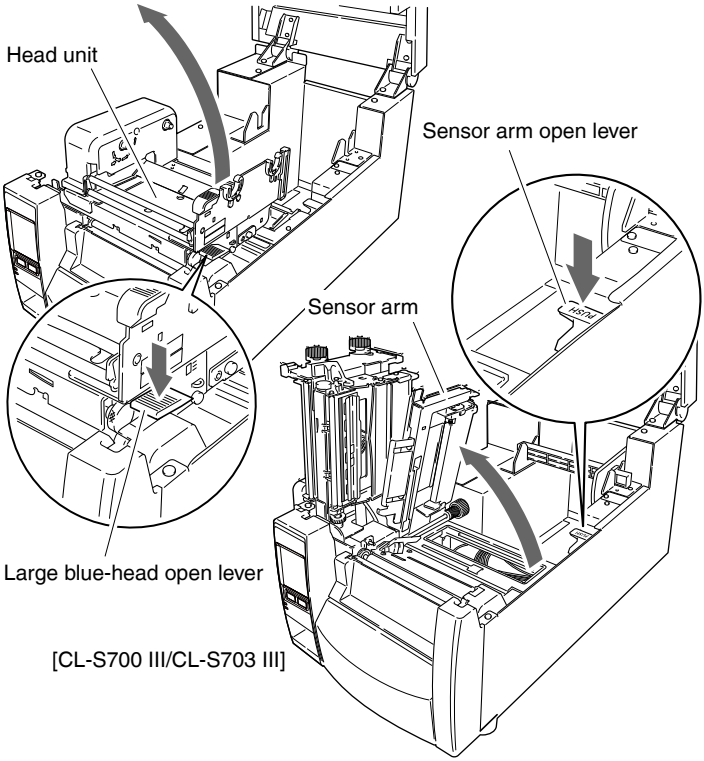


**Caution**

Note the following precautions when the head unit is open.

- Do not touch the thermal head.

2. **Insert the fanfold media through from the external media feed port at the back of the printer.**

3. **Leaving the specified gap from the printer, place the fanfold paper so that it is at the same height as the printer and becomes parallel with the printer as shown in the figures below.**

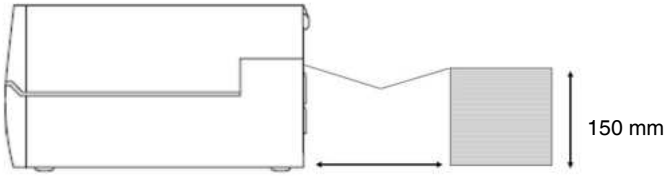


Label length + 50 mm or more

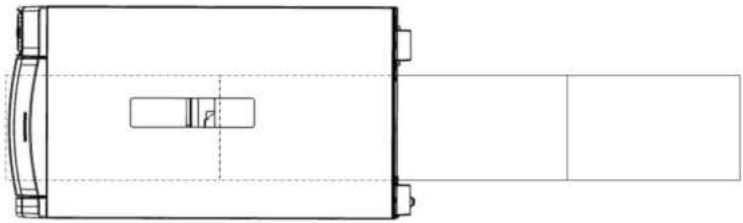

Place the fanfold media so that it is parallel with the printer.

4. **Insert the fanfold media through below media holder bar and set the holder by aligning it with the media width.**

| **Caution** |
| --- |
| Do not try to hold the media too tightly with these guides as it will cause the printer to jam during printing. |

5. **Align the media with the left fixed media guide (2 locations), align the right movable media guide with the media width, and lower the sensor arm which loosely holds the media in position.**

6. **Lower the head unit back down to the closed position. Push the head close knob firmly to close and lock the mechanism.**

   **The mechanism is only locked correctly when you head a “click”.**

   **Align it with the width of the media that has been set, then set the media width adjustment screw and the media thickness adjustment knob. See “Chapter 3 Printer Adjustments”.**

**Refer to 4.2 Media Thickness Adjustment**

**Refer to 4.3 Media Width Adjustment**

**7. Selecting the sensor**

**Select the sensor to be used from “Setup” on the menu screen -> “Sensor Setup” -> “Media Sensor.”**

**Refer to Menu settings**

**8. Push the FEED key to feed the media. It will halt at the next print start position.**

## Cut position of media with a perforated line

When tearing manually, the media can be torn at the position of the perforated line.

When adjusting the paper stop position, set the vertical printing position to a value larger than the media stop position. Otherwise, the media may come off the platen during back feeding.

Adjust each setting using the printer driver or LabelPrinterUtility.

## Using the Rewinder as a Peeler (CL-S700 III R models/Peeling Mode)

**1. Open the rewinder cover and remove the rewinder flange.**

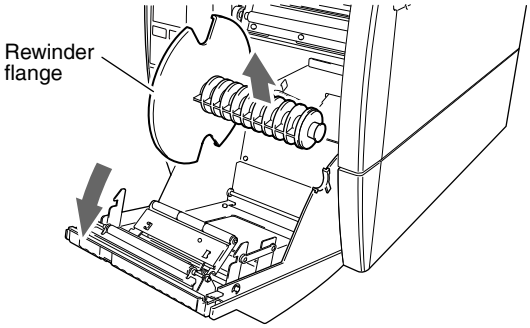


**2. Pull out approximately 40cm length of the media from the head unit.**

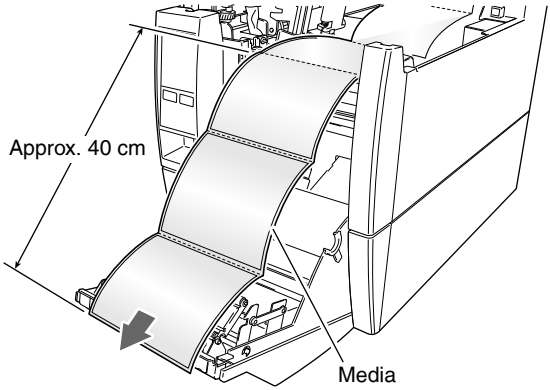


**3. Peel off a number of labels at the tip part of the media from the liner so that the liner unit is in contact with the peeler roller when closing the rewinder cover.**

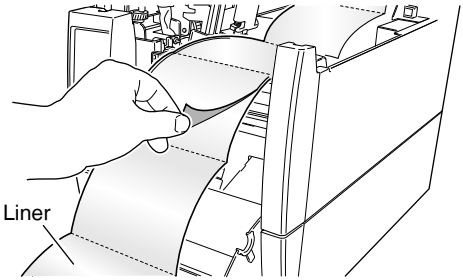

4. **Insert the end of the liner in to the slot in the rewinder flange and wind the liner on to itself with two or three turns to ensure it is held properly. Set the rewinder flange back in to the printer.**

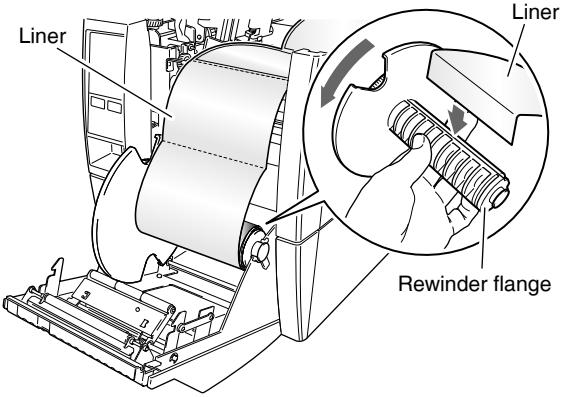


5. **Confirm that the liner unit is in place in the peeler roller and close the rewinder cover.**

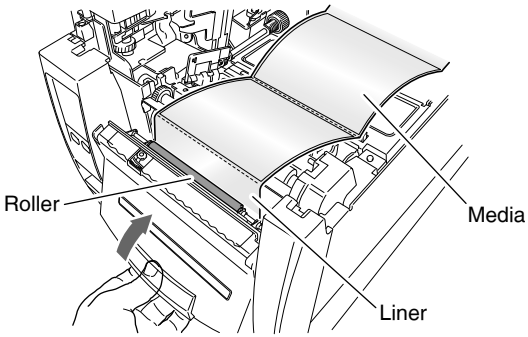


**Refer to Loading roll media**

## Caution

When closing the rewinder cover, be careful not to catch any foreign objects or fingers in the mechanism.

# 3.7 Setting the Ribbon

The following kinds and sizes of ribbons can be used.

| | |
|---|---|
| Types | Inside wound and outside wound ribbon |
| Max. ribbon width | 114.0 mm (4.50 inch) |
| Min. ribbon width | 25.4 mm (1.00 inch) |
| Max. ribbon length | 450.0 m (1,476 ft) |
| Max. roll diameter | 86.5 mm (3.40 inch) |
| Inner diameter of the paper core | 25.4 ±0.25 mm (1.00 ±0.01 inch) |
| Lead tape length | Less than 80 mm |

## Setting method

**1. Place the attached ribbon and paper core separately on one of the two attached ribbon holders.**

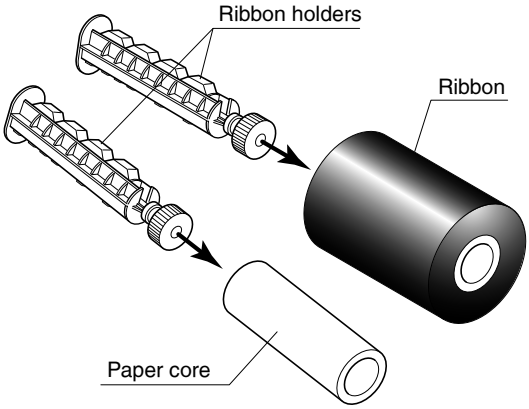


**Notes**

- Insert the two ribbon holders into the ribbon and paper cores ensuring that they are pushed in all the way.
- Use of ribbon with a width that is at least +10% wider than the width of the media to be used is recommended.
- If using media with a width of 2 inches or less, we recommend using a 60-mm or wider ribbon.

2. **Install the unused ribbon and holder in to the rear ribbon drive unit. The splines on the ribbon drive gear mechanism engage with the end of the ribbon holder.**

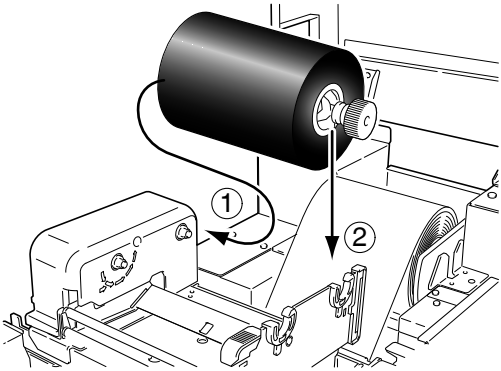


3. **Push the large blue head-open lever to release the head unit. Pull out the ribbon from the bottom of the head unit to the ribbon winding side.**

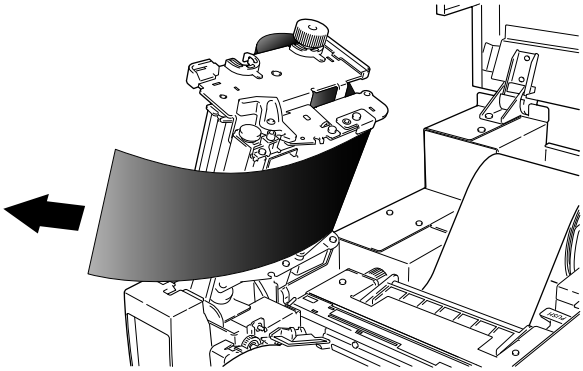

4. **Using tape etc., fix the ribbon that you have pulled out on the ribbon holder on which the paper core has been set and wind it on the ribbon holder.**

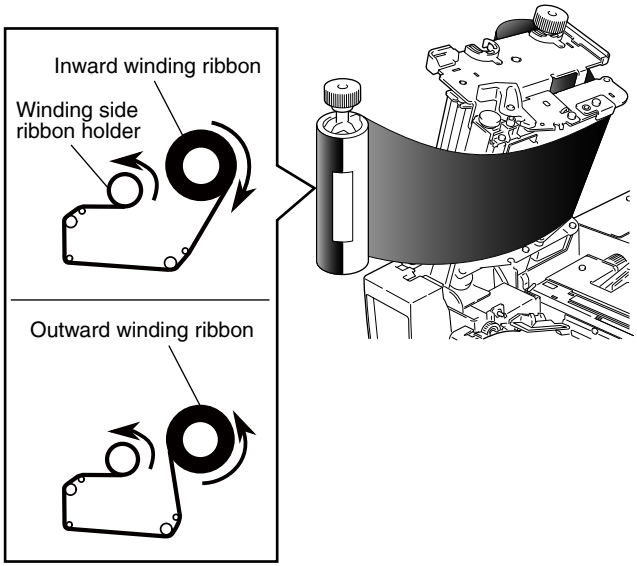


5. **Set the ribbon holder on which the paper core has been set in the ribbon drive unit, then rotate it in the direction shown by the arrow to remove slack and wrinkles from the ribbon.**

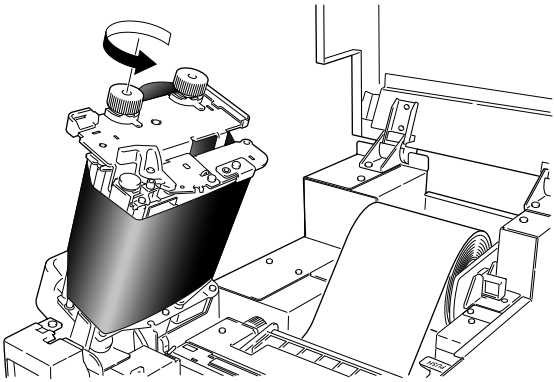

6. **Lower the head unit back down to the closed position. Push the head close knob firmly to close and lock the mechanism.**

   **The mechanism is only locked correctly when you heard a “click”. If the ribbon is wrinkled, push the FEED key until the wrinkles disappear. If the wrinkles do not disappear or if it slips, perform ribbon tension adjustment and media width adjustment. See “4. Printer Adjustments” for these adjustment methods.**

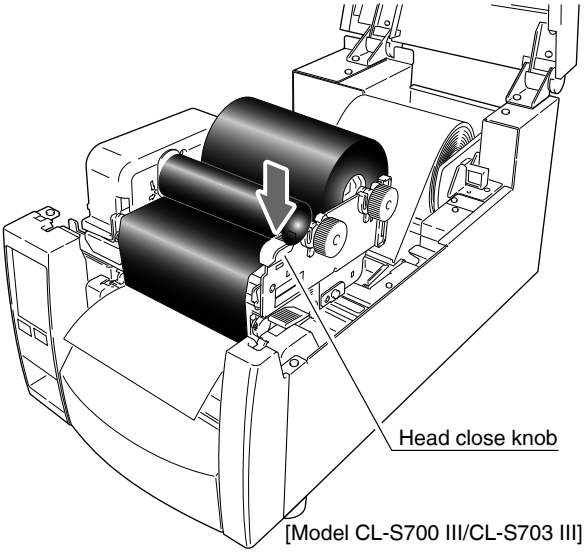


[Model CL-S700 III/CL-S703 III]

**Refer to 4.4 Adjusting the Ribbon**

**Refer to 4.3 Media Width Adjustment**

# 3.8 Mode Settings

If the power supply is turned on while pushing the PAUSE key, the following function is executed, and the printer goes into the User Test mode.

By pressing the “Menu” button on the “User Test” top screen, the “User Test” menu screen for executing the various functions is displayed.

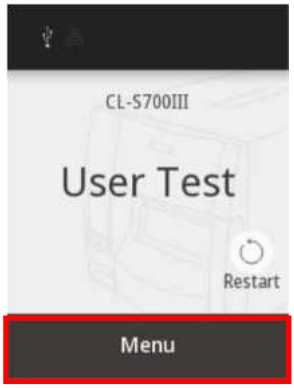

**Self Print**

This mode is for performing self-test printing. Self-test printing is an easy way to check the printer settings and the print quality.

Press the “Self Print” button on the “User Test” menu screen, load the media (labels), and then perform the following procedure.

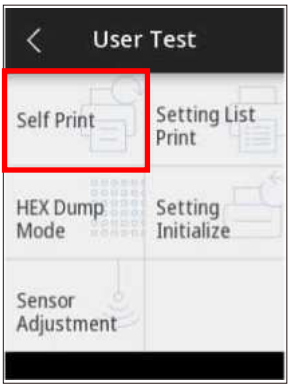

### When using label media

After selecting “See Through” or “Reflect,” press the “OK” button at the bottom of the screen. Then, press the “Print” button on the screen displayed, and the test pattern will be printed.

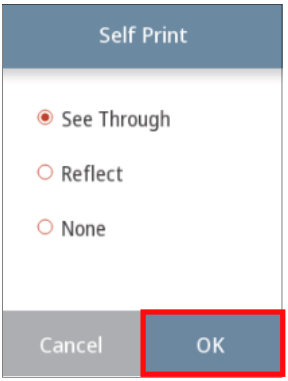

### When using continuous media

After selecting “None,” press the “OK” button at the bottom of the screen. Then, press the “Print” button on the screen displayed, and the test pattern will be printed.

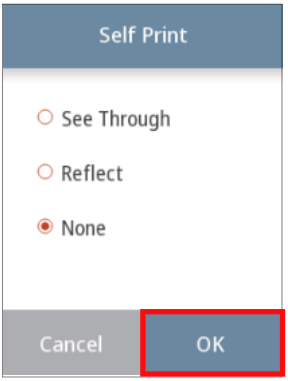


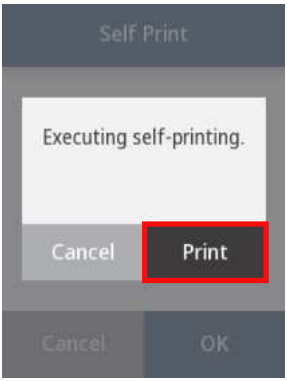

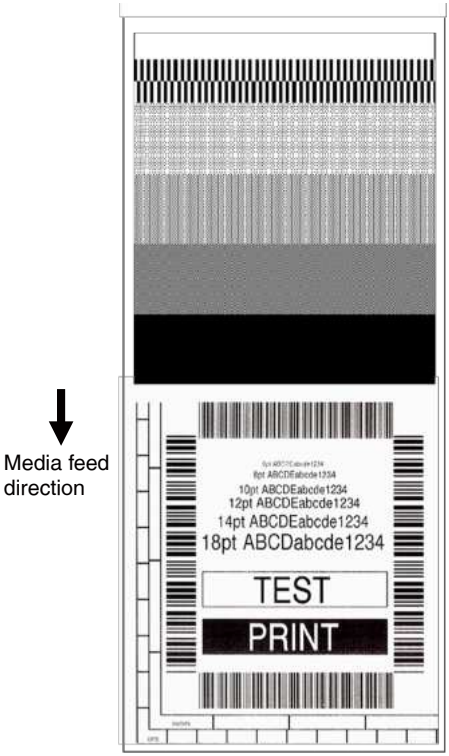


Using the Self Test Print shown above, you can make adjustments to the printer settings such as media width and media thickness (printhead pressure). For more details of the adjustment, refer to “4. Printer Adjustments.”

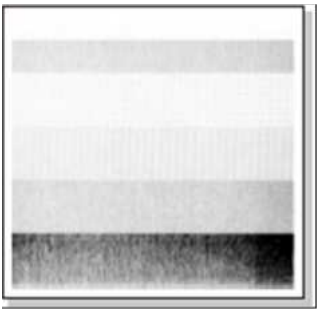

The first sample, left, shows an incorrectly set “media thickness adjustment” . For standard label media, the media thickness adjustment indicator should be set to the center scale in the window.

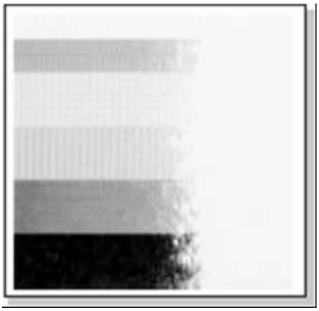

The second sample, left, shows an incorrectly set “media width adjustment” . For 4-inch or 100 mm wide media, the adjuster should be set to the scale of 100 mm in the window.
The settings shown above are for general label media and may not apply to specialist media.

**Refer to 4.3 Media Width Adjustment**

**Refer to 4.2 Media Thickness Adjustment**

## HEX Dump Mode

This mode is used to print a hex dump list (data received by the printer represented in hex values) for confirmation of the data content.

Press the “HEX Dump Mode” button on the “User Test” menu screen, load the media (labels), and then perform the following procedure.

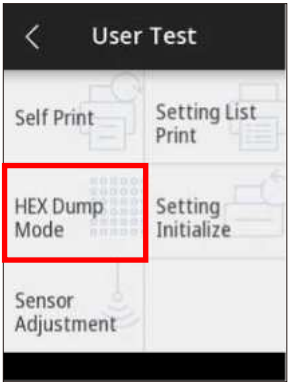


### When using label media

After selecting “See Through” or “Reflect,” press the “OK” button at the bottom of the screen. Then, press the “OK” button on the screen displayed.

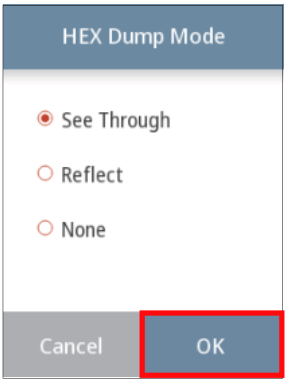

### When using continuous media

After selecting “None,” press the “OK” button at the bottom of the screen. Then, press the “OK” button on the screen displayed.

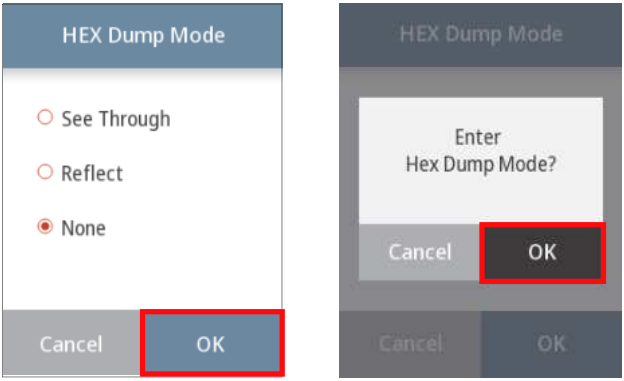


**Example of dump list printing**

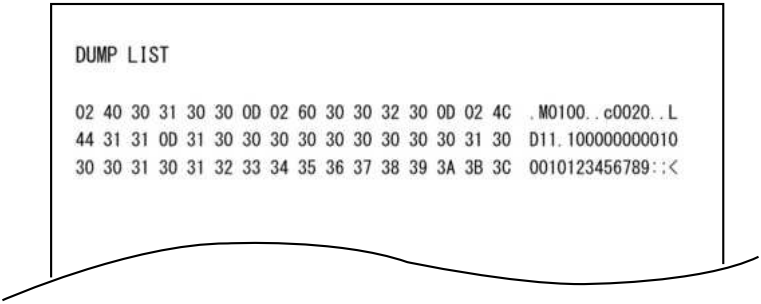

```
DUMP LIST

02 40 30 31 30 30 0D 02 60 30 30 32 30 0D 02 4C  .M0100..c0020..L
44 31 31 0D 31 30 30 30 30 30 30 30 30 30 31 30  D11.100000000010
30 30 31 30 31 32 33 34 35 36 37 38 39 3A 3B 3C  0010123456789:;<
```

* To exit HEX Dump Mode, turn off the power to the printer then turn the power on again (restart).

## Printing a List of Settings

A list of the setting values can be printed for checking.

Press the “Setting List Print” button on the “User Test” menu screen, and after selecting “Current Setting,” press the “OK” button at the bottom of the screen. Then, press the “Print” button on the screen displayed.

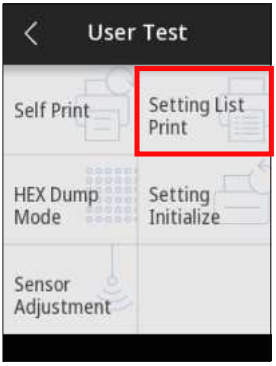


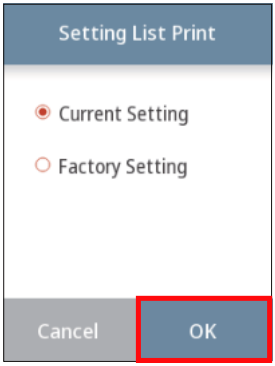


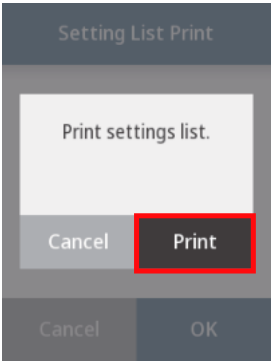


**Machine Information**

| | |
|---|---|
| Model Number | : CL-S700 III |
| Boot Version | : **** |
| ROM Version | : ******** |
| ROM Date(DD//MM//YY) | : 07/10/03 |
| ROMCheck Sum | : **** |
| FPGA Version | : *** *** |
| Head Check | : OK |
| Print Counter | : 0002.234km |
| Service Counter | : 0002.234km |
| Cut Counter | : 0 |
| Sensor Monitor | : 1.50V |
| Option Interface | : None |
| MAC Address | : **:**:**:**:**:** |

**Current Menu Setting**

| | |
|---|---|
| [Global Config Menu] | |
| Config Set | : 1 |
| [PageSetup Menu] | |
| Print Speed | : 7 IPS |
| Print Darkness | : 12 |
| Darkness Adjust | : 00 |
| Print Method | : Thermal Transfer |
| Continuous Media Length | : 4.00 inch |
| Vertical Position | : 0.00 inch |
| Horizontal Shift | : 0.00 inch |
| Vertical Image Shift | : 0.00 inch |
| Small Media Adjustment | : Off |
| Small Media Length | : 1.00 inch |

* If the double heat function is enabled, the value doubles.

This function reduces print fading. To enable this function, configure the setting via Windows driver properties or LabelPrinterUtility. See the respective manual for how to configure the setting.

| **Notes** |
| --- |
| Citizen continually enhances its printers with new options and settings based on our customer's requests. Extra or changed menu items may appear on the above print out in some cases. |

## Settings initialization

This mode is used to initialize printer settings and the user memory area.

Press the "Settings Initialize" button on the "User Test" menu screen, and press the "Initialize" button on the screen displayed.

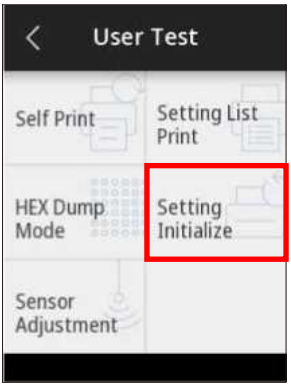

## Menu settings

Press the “Menu” button at the bottom of the top screen while printing is enabled, and enter the “Menu” screen. Using touch operations on the operation panel, the details of the current settings can be checked, and the setting details of each item can be changed.

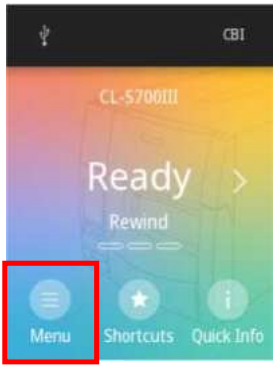


Top screen

Menu screen

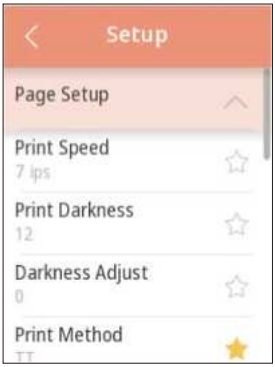


Sub menu screen

| Menu | Sub Menu | Description |
|---|---|---|
| Setup | Page Setup | Display/Change print settings |
| | Sensor Setup | Display/Change the various sensor settings |
| | System Setup | Display/Change the system settings |
| | Locking Setup | Display/Change the operation restriction settings |
| | Standalone Forms | Setting/Managing of Standalone Forms |
| After Print | – | Display/Change the settings for operations after printing |
| Interfaces | Interface | Display/Change the interface settings |
| | Option Interface | Display/Change the optional interface settings |
| Test & Info | Test Mode | Printer operation test mode |
| | Machine-Info | Printer information display |
| Global Configuration | – | Display/Change the configuration number |
| Wizard | – | Printer settings using the wizard |

### Example of changing setting values

The following is an explanation of how to change the setting value of “Print Darkness” in “Page Setup” from “12” to “13.”

**1. Select “Setup” from the “Menu” screen to display the sub-menu list.**

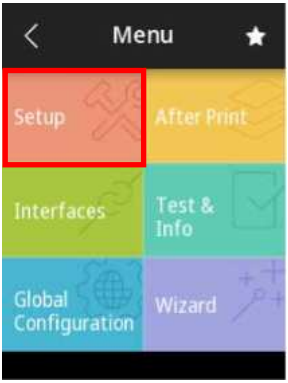


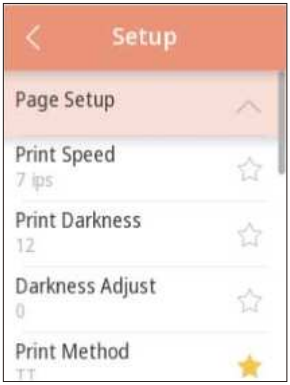


**2. From “Page Setup,” select “Print Darkness.” The current setting value “12” is displayed.**

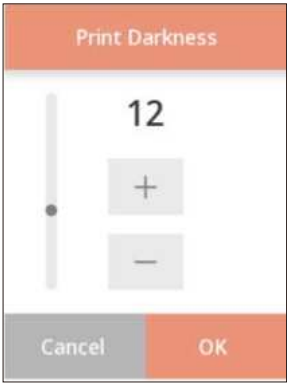


**Function of each button**

| | |
|---|---|
| + button | Displays a value greater than the current value (in this case, 13). |
| - button | Displays a value lower than the current value (in this case, 11). |
| OK button | The current value is temporarily saved. |
| Cancel button | “Print Darkness” is exited. The value is not changed. |

3. **Press the + button once to change the value to “13,” then press the “OK” button at the bottom of the screen.**

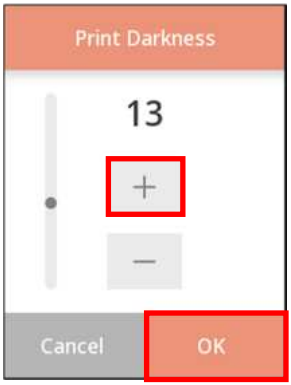


### Save the setting

When a setting change requires the printer to be restarted, a screen to select Reboot is displayed before returning to the top screen.

Press “Reboot” to restart the printer.

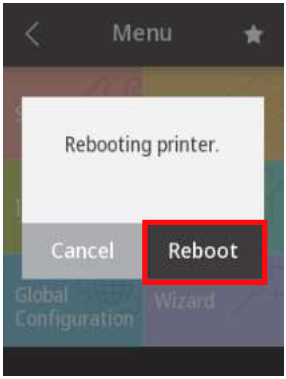

## List of Settings

Press the “Menu” button on the top screen while printing is enabled, and enter the “Menu” screen. Using touch operations on the operation panel, carry out the printer settings.

Top screen

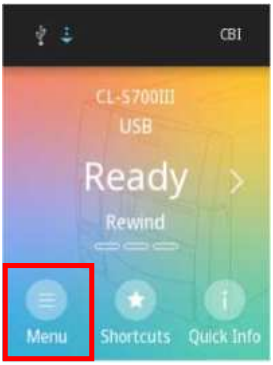


Menu screen

Sub menu screen

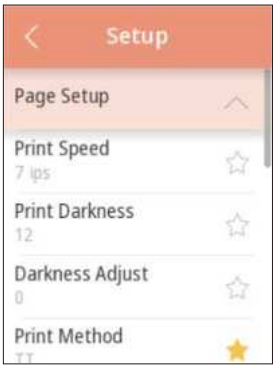


The details that can be set on the printer are as follows.

**Menu: Setup -> Page Setup**

| Sub Menu | | Default | Configurable range | Remarks |
|---|---|---|---|---|
| Print Speed | CL-S700 III | 7 IPS | When the print preference is darkness<br>2 to 10 IPS<br>When the preference is speed<br>2 to 12 IPS | Printing speed setting<br>The range that can be set varies depending on the print preference. (CL-S700 III / CL-S703 III) |
| | CL-S703 III | 7 IPS | When the print preference is darkness<br>2 to 8 IPS<br>When the preference is speed<br>2 to 10 IPS | |
| | CL-S700 III R | 7 IPS | 2 to 10 IPS | |
| Print Darkness | | DM4: 12<br>DMI: 12<br>DPP: 11<br>ZPI2: 12<br>EPI2: 7 | DM4: 0 to 30<br>DMI: 0 to 30<br>DPP: 0 to 20<br>ZPI2: 0 to 30<br>EPI2: 0 to 15 | Adjusting print darkness. |
| Darkness Adjust | | 00 | -10 to 10 | Fine adjustment of darkness commands. |

| Sub Menu | | Default | Configurable range | Remarks |
|---|---|---|---|---|
| Print Preference | | Darkness | Darkness / Speed | Select which setting to be given more weight during printing, print darkness or printing speed.<br>Switching to high-speed priority may affect print quality. If readability or bar code reading accuracy is a priority for your operations, return the setting to darkness priority. |
| Print Method | | TT | TT / DT | Selection of Thermal Transfer (ribbon) or Direct Thermal. |
| Double Heat | | Off | On / Off | Double heat setting |
| Continuous Media Length | CL-S700 III/ CL-S700 III R | 4.00 inch<br>101.6 mm | 0.25 to 99.99 inch<br>6.4 to 2539.7 mm | Setting media length of continuous media.<br>Lower level = during mm mode. |
| | CL-S703 III | 4.00 inch<br>101.6 mm | 0.25 to 64.00 inch<br>6.4 to 1625.6 mm | Setting media length of continuous media.<br>Lower level = during mm mode. |
| Vertical Position | | 0.00 inch /<br>0.0 mm | -1.00 to 1.00 inch /<br>-25.4 to 25.4 mm | Adjusting printing start position. |
| Horizontal Shift | | 0.00 inch /<br>0.0 mm | -1.00 to 1.00 inch /<br>-25.4 to 25.4 mm | Adjusting horizontal image position. |
| Vertical Image Shift | Datamax® | 0.00 inch /<br>0.0 mm | 0.00 to 32.00 inch /<br>0.0 to 812.8 mm | Adjusts the start position for creating images |
| | Zebra® / Eltron® | 000 dots | -120 to 120 dots | |
| Small Media Adjustment | | Off | On / Off | Setting for small label support |
| Small Media Length | | 1.00 inch /<br>25.4 mm | 0.25 to 1.00 inch /<br>6.4 to 25.4 mm | Sets the length for small label media |

## System Setup

| Sub Menu | Default | Configurable range | Remarks |
|---|---|---|---|
| Error Reporting | On Printing | On Printing /<br>Immediate | Setting for error report. |
| Buzzer Select | Exec/Err | Exec/Err<br>All<br>Error<br>Key<br>None | Setting buzzer sounding conditions. |
| Metric/Inch Select | Inch | Inch / mm | Sets the units. |
| Max Media Length | 10.00 inch /<br>254.0 mm | 1.00 to 99.99 inch /<br>25.4 to 2539.7 mm | Sets the maximum media length. |
| LCD Brightness | 100% | 10 to 100% | Adjusting LCD brightness |
| LCD Standby | Off | On / Off | LCD standby selection<br>Select whether to turn off the LCD during the standby mode. |
| Standby Timer | 5 min | 1 to 99 min | Set the time before going into the standby mode |

| Sub Menu | Default | Configurable range | Remarks |
|---|---|---|---|
| Control Code | STD | STD / ALT / ALT-2 | Switches command mode of DMX mode. (Only when Datamax® emulation is selected) |
| Media Power Up | Off | On / Off | Set the media length measurement function when the power supply is On<br>(Only when Zebra® emulation is selected) |
| Emulation Select | DM4 (Datamax®)<br>ZPI2 (Zebra®) | DM4 /<br>DMI /<br>DPP /<br>ZPI2 /<br>EPI2 | Datamax® / Zebra® compatibility selection<br>DM4 : Datamax® 400<br>DMI : Datamax® IClass ™<br>DPP : Datamax® Prodigy Plus®<br>ZPI2 : Zebra® ZPL2™<br>EPI2 : Zebra® EPL2™ |
| Emulation Auto Detect | Full Auto | On /<br>Off /<br>Full Auto | Setting emulation (as above) auto detection. |
| Symbol Set | PM | 50 symbols | Setting symbol set. |
| Custom Info Display | Model Number only | Model Number /<br>Global Config Name /<br>Onboard IP Address /<br>Option board IP Address | Select the printer information displayed at the top of the LCD top screen using the check boxes<br>* Even if the IP address check box is selected, if communication in accordance with the IP address is not possible, -.-.-.- will be displayed on the top screen. |
| Display Language | English | English / 日本語 / 简体中文 / 한국어 | Select the LCD display language. |
| Preview Mode | Off | On / Off | Print preview function settings |

## Sensor Setup

| Sub Menu | Default | Configurable range | Remarks |
|---|---|---|---|
| Sensor Select | Rear Adj Sensor | Rear Adj Sensor / Front Fixed Sensor | Select the front/adjustable sensor |
| Media Sensor | See Through | See Through / Reflect / None | Selecting media sensor. |
| Sensor Monitor | – | – | Displays level of sensor that is currently selected. |
| Sensor Level | 1.7 V | 0.0 V to 3.3 V | Selects threshold of the sensor. |
| Paper End Level | 3.00 V | 0.01 V to 3.30 V | Sets the paper end level |

## Locking Setup

| Sub Menu | Default | Configurable range | Remarks |
|---|---|---|---|
| Settings Lock | Off | On / Off | Prevents a command changing the set value. |
| Keyboard Lock | Off | On / Off | Prevents a change by a key operation. |
| CI Lock | Off | On / Off | Activates/deactivates the CI command.<br>(Only when Zebra® emulation is selected) |

## Standalone Forms

| Sub Menu | Default | Configurable range | Remarks |
|---|---|---|---|
| Forms Printing | Off | On / Off | Forms Printing settings |
| Forms Management | - | - | Template management for Standalone Forms |

## USB Memory

| Sub Menu | Default | Configurable range | Remarks |
|---|---|---|---|
| Save Setting | - | - | Save the printer settings as a setting file |
| Load Setting | - | - | Change the printer settings using a setting file |
| Import Template | - | - | Register a template for Forms Printing on the printer |
| Update Firmware | - | - | Perform firmware updates |

## Menu: After Print

| Sub Menu | Default | Configurable range | Remarks |
|---|---|---|---|
| Auto Configure | On | On / Off | Automatically configures optional devices.<br>On: AutoConfigure enabled (Regardless of whether Function Select is set, if a peeler or cutter is installed, each mode is set automatically.)<br>Off: AutoConfigure disabled (A peeler of cutter is installed, but to not operate the peeler or cutter, turn it Off and the operation is selected by Function Select.) |
| Function Select | Off | Off /<br>Tear On /<br>Peel On (only printers with peeling function) /<br>Cut On (only when a cutter is installed) | Selects the operation when the AutoConfigure is set to Off.<br>Designates the paper position based on each option. The operation of this device is enabled during selection. At the same time, the parameters of the f command of Prodigy Plus are emulated for each optional device. |
| Rewinder Auto Online<br>*CL-S700 III R | Off | On / Off | Sets the Rewinder Auto Online.<br>In the case in which the setting is On, when the “Rewind Open” Error occurs, if the Rewinder Cover is closed, it will automatically return to “Ready“ and printing will restart. |
| Rewinder Online Deley<br>*CL-S700 III R | 2 sec | 1~10 sec | Sets the Rewinder Online Delay.<br>Sets the time until the Rewinder restarts after the Rewinder Cover is closed when the above Rewinder Auto Online is On. |
| Rewinder Torque<br>*CL-S700 III R | 4 | 1~7 | Sets the Rewinder Torque. |

| Sub Menu | Default | Configurable range | Remarks |
|---|---|---|---|
| Cutter Action<br>*Only when cutter is mounted. | Backfeed | Backfeed / Through | Sets the cutter action.<br>With the optional AutoConfigure On, printing is executed only when the cutter is installed or only when “Cut On” is selected by Function Select.<br>“Backfeed” is always set after cutting.<br>“Through” is set at the rear end of sheets 1 to n-1 when the number of copies = n, and the rear end of the final page of single sheet and the copy is backfeed. |
| Peel Wait Delay<br>*Only when peeling option is mounted. | 0.1 sec | 0.1 to 2.0 sec | Sets the Peel Wait Delay.<br>Displays only machines with a peeler installed. |
| Paper Position | 0.00 inch / 0.0 mm | When the function selection is set to “Off” (Printing start position (platen-centered))<br>0.00 to 2.00 inch / 0.0 to 50.8 mm<br>When the function selection is set to “Tear/ Peal On/Cut On” (Tear position/Peal On position/Cut On position)<br>-1.00 to 1.00 inch / -25.4 to 25.4 mm | Adjusts the stop position.<br>It is based on the inch/millimeter setting. There are initial values of the stop position for each device set by “Function Select”, and later, relative values are set. |

## Menu: Interfaces -> Interface

| Sub Menu | Default | Configurable range | Remarks |
|---|---|---|---|
| USB Device Class | Printer | Printer / VCOM | Selects the USB device class. |
| USB VCOM Protocol | Auto | Auto / DTR / X-ON | Selects the protocol (flow control) when operating USB VCOM. |
| USB 2.0 High Speed | On | On / Off | Enable/disable setting of USB 2.0 High Speed.<br>When disabled, device runs at Full Speed. |
| IPv4 Address | 0.0.0.0 | 0.0.0.0 to 255.255.255.255 | Sets the IPv4 network address |
| IPv4 Subnet | 0.0.0.0 | 0.0.0.0 to 255.255.255.255 | Sets the IPv4 subnet mask |
| IPv4 Gateway | 0.0.0.0 | 0.0.0.0 to 255.255.255.255 | Sets the IPv4 gateway address |
| IPv4 DHCP | On | On / Off | Enables/disables IPv4 DHCP |
| IPv6 | On | On / Off | Enables/disables IPv6 |
| Host Name | PRINTSERVERxxyyzz<br>* For xxyyzz, see the last three digits of the MAC address. | Arbitrary characters from 0 to 31 in ASCII code 0x20 to 0x7E | Host name as the print server |
| Port No. | 9100 | 1024 to 65535 | Port number used as the Raw Socket Port |

| Sub Menu | Default | Configurable range | Remarks |
|---|---|---|---|
| Timeout Time | 60 | 0 to 300 | When there is a session with the timeout time for the connection to the host device in units of seconds, and there has been no data received from the host for the set period of time, the session will be terminated when the set value for the number of seconds has passed.<br>Setting a value of 0 disables timeouts. |

* For each setting related to the interface, the setting becomes enabled after turning on the power again or after restarting.

## Option Interface

| Sub Menu | Default | Configurable range | Remarks |
|---|---|---|---|
| RS-232C Baud rate | 9600 | 115200 / 57600 / 38400 / 19200 / 9600 / 4800 / 2400 | Setting the baud rate of the serial interface. |
| RS-232C Parity | None | None / Odd / Even | Setting the communication parity for the serial interface. |
| RS-232C Length | 8-bits | 8-bits / 7-bits | Setting the character length for the serial interface. |
| RS-232C Stop bit | 1-bit | 1-bit / 2-bits | Setting the stop bit for the serial interface. |
| RS-232C X-ON | Yes | Yes / No | Selectively setting the X-ON flow control of the serial interface. |
| IEEE 1284 | On | On / Off | Setting both direction of the Centro Interface.<br>(When a parallel board or a high-end LAN board is installed) |
| Web Monitor | Auto | Auto / On / Off | Selecting the web monitor function.<br>(When a parallel board or a high-end LAN board is installed) |
| Network Address | – | 0.0.0.0 to 255.255.255.255 | Sets the network address<br>(When a high-end LAN board is installed and a web monitor is operating) |
| Subnet Mask | – | 0.0.0.0 to 255.255.255.255 | Sets the subnet mask<br>(When a high-end LAN board is installed and a web monitor is operating) |
| Gateway address | – | 0.0.0.0 to 255.255.255.255 | Sets the gateway address<br>(When a high-end LAN board is installed and a web monitor is operating) |
| BOOTP | – | On / Off | BOOTP setting<br>(When a high-end LAN board is installed and a web monitor is operating) |
| DHCP | – | On / Off | DHCP setting<br>(When a high-end LAN board is installed and a web monitor is operating) |
| WLAN Mode | – | Auto / Ad-Hoc / Infrastructure / Soft AP | Sets the wireless LAN mode<br>(When a high-end LAN board is installed and a web monitor is operating) |

| Sub Menu | Default | Configurable range | Remarks |
|---|---|---|---|
| WLAN Channel | – | 01 to 14 | Sets the wireless LAN channel<br>(When a high-end LAN board is installed and a web monitor is operating) |
| WLAN SSID | – | Max. 32 characters | Sets the wireless LAN SSID<br>(When a high-end LAN board is installed and a web monitor is operating) |

## Menu: Test & Info -> Test Mode

| Sub Menu | Default | Configurable range | Remarks |
|---|---|---|---|
| Print Pattern | Current Config | Current Config / Global Config / Sample | Executes the test pattern. |
| Head Check | No | Yes / No | Executes head check. |
| Factory Default | No | Yes / No | Initializes the set values of the configuration set to the state when the unit was shipped from the factory. |
| Hex Dump | No | Yes / No | Sets the hex dump mode. |
| Serial Monitor | – | – | Displays the state of the serial interface. |
| Auto Calibration | See Through | See Through / Reflect | Executes the calibration of the sensor. |
| Sensor Monitor | See Through | See Through / Reflect | Displays the level of the sensor. |

## Machine-Info

| Sub Menu | Configurable range | Remarks |
|---|---|---|
| Model Number | CL-S70X III | Displays the model's name. |
| Boot Version | *.* | Displays the boot version. |
| ROM Version | ******** | Displays the ROM version. |
| ROM Date (DD/MM/YY) | **/**/** | Displays the date the ROM was prepared. |
| ROM CheckSum | **** | Displays the check sum of the ROM. |
| FPGA Version | *.* | Displays the FPGA version. |
| Head Check | OK / NG | Displays the results of the head check. |
| Print Counter * | ****.*** km | Displays the print counter. |
| Service Counter * | ****.*** km | Displays the service counter. |
| Cut Counter | ******* | Displays the cut count. |
| Sensor Monitor | *.* V | Displays the sensor level. |
| Option I/F | None / RS-232C* / LAN / IEEE1284 | Displays whether optional interfaces are available or not<br>* If DIP switch 1 is ON in an RS-232C interface, RS-232C (DIP SW) will be displayed. |
| RS-232C Baud rate | | If DIP switch 1 is ON in an RS-232C interface, the communication conditions set for the DIP switch will be displayed. |
| RS-232C Parity | | |
| RS-232C Length | | |
| RS-232C Stop bit | | |
| RS-232C X-ON | | |
| MAC Address | ********** | Displays the MAC address |

* If the double heat function is enabled, the value doubles.

### Global Configuration

| Sub Menu | Default | Configurable range | Remarks |
|---|---|---|---|
| – | Config Set 1 | Config Set 1 / Config Set 2 / Config Set 3 | Sets the Config Set. |

### Wizard

| Sub Menu | Default | Configurable range | Remarks |
|---|---|---|---|
| – | – | – | The basic settings of the printer can be performed in accordance with procedures displayed on the screen. |

## Global Configuration Sets

The printer can store three sets of configuration settings that can be recalled quickly and easily.

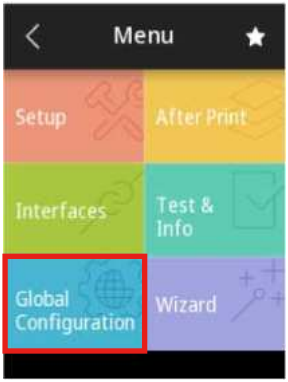


Different setting values set for [Config Set 1] to [Config Set 3] can be saved.

For example, [Config Set 1] can be set to “Print Speed 5 IPS,” “Print Method Thermal Transfer,” and “Print Darkness 18,” and [Config Set 2] can be set to “Print Speed 8 IPS,” “Print Method Direct Thermal,” and “Print Darkness 12.”

Using the three types of settings in this way, different media (labels) can be easily handled in daily use.

Printing can be carried out from “Test & Info” -> “Test Mode” -> “Print Pattern” -> “All Menu Settings.”

# Global Menu Settings

| | Active Configuration Setting | | |
|---|---|---|---|
| | Config 1 | Config 2 | Config 3 |
| [Page Setup Menu] | | | |
| Print Speed | 7 IPS | 7 IPS | 7 IPS |
| Print Darkness | 12 | 12 | 12 |
| Darkness Adjust | +00 | +00 | +00 |
| Print Preference | Darkness | Darkness | Darkness |
| Print Method | DT | TT | TT |
| Continuous Media Length | 004.00inch | 004.00inch | 004.00inch |
| Vertical Position | +0.00inch | +0.00inch | +0.00inch |
| Horizontal Shift | +0.00inch | +0.00inch | +0.00inch |
| Vertical Image Shift | 00.00inch | 00.00inch | 00.00inch |
| Small Media Adjustment | Off | Off | Off |
| Small Media Length | 1.00inch | 1.00inch | 1.00inch |
| [Sensor Setup Menu] | | | |
| Media Sensor | None | See Through | See Through |
| Sensor Select | Rear Adj Sen | Rear Adj Sen | Rear Adj Sen |
| Sensor Level | 1.5V | 1.7V | 1.7V |
| Paper End Level | 1.50V | 3.00V | 3.00V |
| [System Setup Menu] | | | |
| Error Reporting | On Printing | On Printing | On Printing |
| Buzzer Select | On | On | On |
| Metric/Inch Select | Inch | Inch | Inch |
| Max Media Length | 010.00inch | 010.00inch | 010.00inch |
| LCD Standby | Off | Off | Off |
| Standby Timer | 5min | 5min | 5min |
| Control Code | STD | STD | STD |
| Emulation Select | DM4 | DM4 | DM4 |
| Emulation Auto Detect | Full Auto | Full Auto | Full Auto |
| Symbol Set | PM | PM | PM |
| LCD Brightness | 100% | 100% | 100% |
| Preview Mode | Off | Off | Off |
| [Locking Setup Menu] | | | |
| Settings Lock | Off | Off | Off |
| Keyboard Lock | Off | Off | Off |
| [Standalone Forms Menu] | | | |
| Forms Printing | Off | Off | Off |
| [After Print Menu] | | | |
| Auto Configure | On | On | On |
| Function Select | Tear | Tear | Tear |
| Paper Position | +0.00 inch | +0.00 inch | +0.00 inch |
| [Interface Menu] | | | |
| USB Device Class | Printer | Printer | Printer |
| USB VCOM Protocol | Auto | Auto | Auto |
| USB 2.0 High Speed | On | On | On |
| IPv4 Address | 00. 00. 00. 00 | 00. 00. 00. 00 | 00. 00. 00. 00 |
| IPv4 Subnet Mask | 00. 00. 00. 00 | 00. 00. 00. 00 | 00. 00. 00. 00 |
| IPv4 Gateway | 00. 00. 00. 00 | 00. 00. 00. 00 | 00. 00. 00. 00 |
| IPv4 DHCP | On | On | On |
| IPv6 | On | On | On |

## Wizard

The basic settings of the printer can be performed in accordance with procedures displayed on the screen.

**1. Select “Wizard” from the menu screen.**

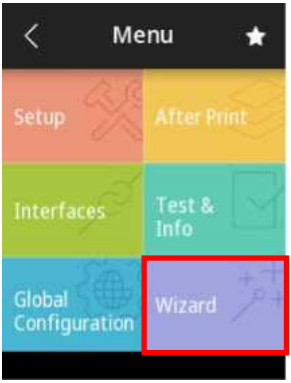


**2. Perform the printer settings in the following sequence in accordance with procedures on the screen.**

1. Ribbon/Media settings
2. Sensor adjustment
3. Test print & saving settings

## Shortcut registration

Press the “Shortcuts” button at the bottom of the top screen while printing is enabled to display the shortcuts menu screen.

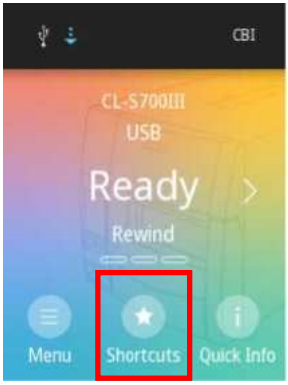


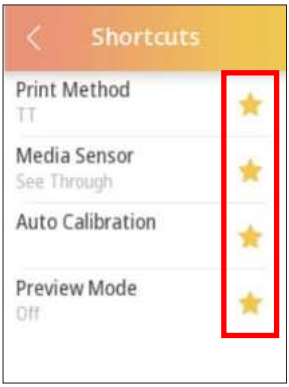


Shortcuts can be registered by pressing the star icons on the sub-menu screen.

In addition, shortcut registrations can be deleted by pressing the star icons on the sub-menu or in the shortcut menu list.

## Quick information list display

Press the “Quick Info” button at the bottom of the top screen while printing is enabled to display the printer “Quick Info” screen.

The basic information of the printer can be easily checked by accessing the “Machine-Info” from the menu.

## Reprinting

By performing the following operations, the content that has been previously printed most recently can be reprinted.

1. **Press the right arrow button on the top screen, and press the “Repeat Last One” or “Repeat Last Set” button.**

* When Zebra® emulation is selected, the “Repeat Last Set” button is not displayed.

2. **When the “Reprint” button on the screen displayed is pressed, reprinting starts. (The following figure shows the case for “Repeat Last One”)**

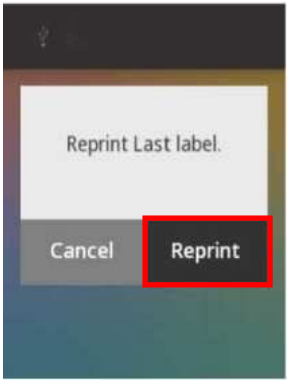


## Clearing jobs

Jobs stored in the printer can be canceled when the printer is paused.

Jobs can be canceled by performing the following operations in the paused state.

1. **Press the “Job Clear” button or the “Job All Clear” button at the bottom of the screen.**

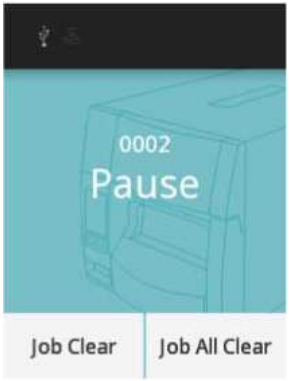

**2. Press the “Job Clear” button on the screen displayed to cancel the job.**

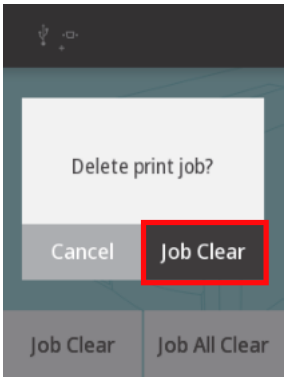


## Forms Printing

Forms Printing is a function that enables printing labels on a printer on its own, without a PC, by preparing a template for printing labels on Label Layout Editor, a special PC application. In addition, data from a USB barcode scanner or USB memory connected to the printer can be used as barcode data or character string data in the printing template. This function is only enabled when the Emulation Select setting is DMI.

**1. Preparation**

Set the Emulation Select setting to DMI in advance. Prepare the print data template or register the template on the printer using the Label Layout Editor PC application. In addition, templates can be registered from a USB memory connected to the printer, or templates can be deleted or fixed (a single template is automatically selected when the printer is started) from the printer menu settings.

* For details, refer to the Label Layout Editor instruction manual.

**2. Execution**

If “Setup” -> “Standalone Forms” -> “Forms Printing” is turned on in the menu settings, and the printer is restarted, if there is a template that was registered from Layout Editor, the following selection screen will be displayed.

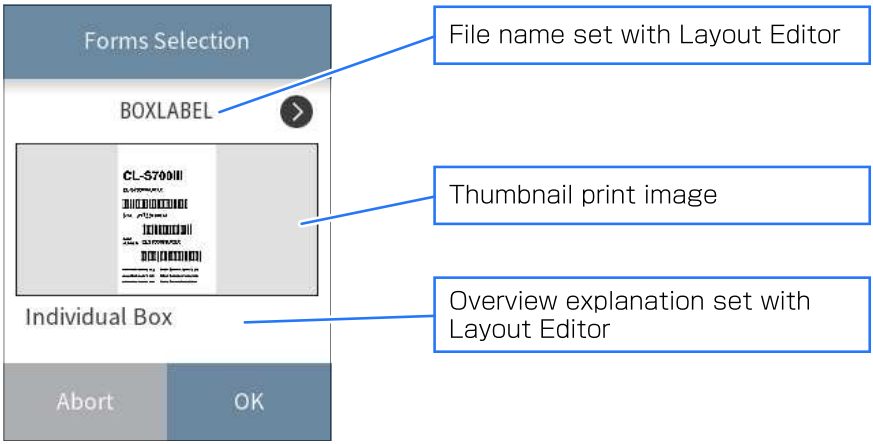


- If there are several templates, display the template you want to print using the < > buttons.
- Press the “OK” button, and Forms Printing of the displayed template will be executed.
- Press the “Abort” button, to stop template selection, and the screen will return to the menu top screen.

**3. Aborting Forms Printing**

In the template selection screen, press the “Abort” button, return to the menu top screen, and turn off the “Standalone Forms” -> “Forms Printing” setting. The next time the printer is started up, the template selection screen will not be displayed.

## USB host function

By connecting a USB memory or a barcode scanner to the USB host connector at the front of the main unit, the following functions can be executed.

- Updating of firmware using the USB memory
- Saving the printer settings using the USB memory (a maximum of five settings can be imported)
- Restoring printer settings using the USB memory (a maximum of five settings can be exported)
- Importing templates for Forms Printing using the USB memory
- Reading barcodes using the barcode scanner (the barcode scanner can be used in Forms Printing)

| Notes |
| --- |
| ■ The USB memory must have a capacity of 32 GB or less and be in FAT32 format.<br>■ Do not use USB memories with a security function or USB memory card readers, or connect via extension cables or a USB hub. |

## Updating of firmware using the USB memory

**1. Preparation**

Create a folder named “JN” in the USB memory, and save the update file in the folder with the name “UPDATE” and the extension nar.

* Contact your retailer for details on the update file.

**2. When a USB memory is connected to the printer, the USB memory menu is added to the setup menu.**

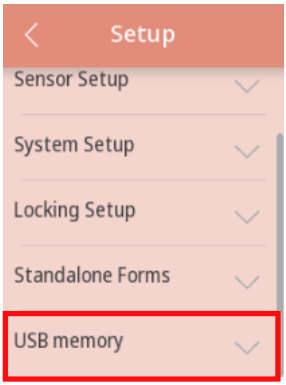


**3. Press the “USB memory” button, and press “Update Firmware” from the expanded list.**

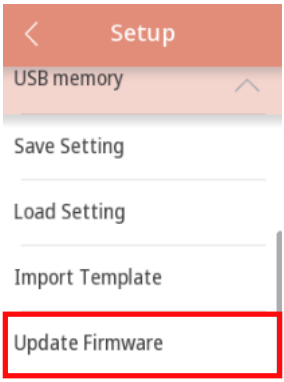

4. Press the “OK” button at the bottom of the screen to acquire and display the update information.

5. Press “Update” at the bottom of the screen to start the update.

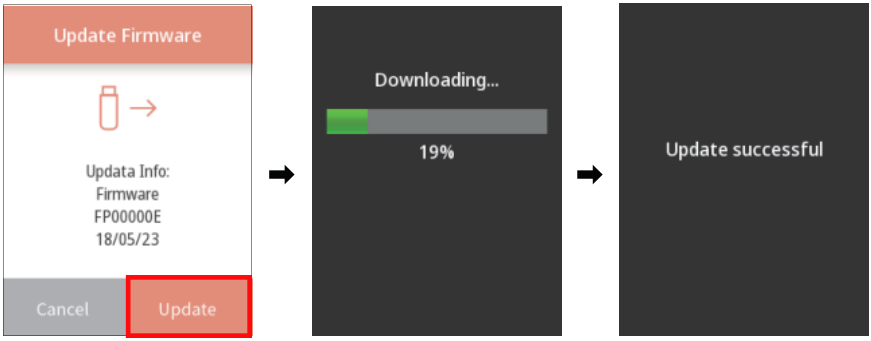

## Saving printer settings to a USB memory

### 1. Preparation

When a USB memory is connected to the printer, the USB memory is displayed in the setup menu. Next, press Save Setting.

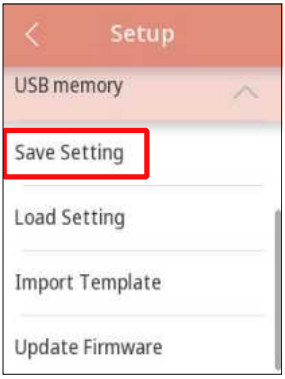


### 2. Select the destination for saving the settings

Select one save destination from the five destinations, and press the “OK” button.

**3. Enter the setting explanation and save the settings**

An explanation can be added to a setting, so after entering the explanation text using the keyboard, press the “OK” button and the printer settings will be saved to the USB memory as a file.

The printer settings saved to the USB memory are as follows. In addition, the following settings included in Global Configuration and the selection number of the Global Configuration settings are included in the settings saved.

**List of printer settings saved to USB memory**

| | |
|---|---|
| Page Setup | Print Speed |
| | Print Darkness |
| | Darkness Adjust |
| | Print Preference |
| | Print Method |
| | Double Heat |
| | Continuous Media Length |
| | Vertical Position |
| | Horizontal Shift |
| | Vertical Image Shift |
| | Small Media Adjustment |
| | Small Media Length |

| | |
|---|---|
| System Setup | Error Reporting<br>Buzzer Select<br>Metric/Inch Select<br>Max Media Length<br>LCD Brightness<br>LCD Standby<br>Standby Timer<br>Control Code<br>Media Power Up<br>Emulation Select<br>Emulation Auto Detect<br>Symbol Set<br>Preview Mode |
| Sensor Setup | Media Sensor<br>Sensor Select |
| Locking Setup | Settings Lock<br>Keyboard Lock<br>CI Lock |
| Standalone Forms | Forms Printing<br>Forms Management |
| After Print | Auto Configure<br>Function Select<br>Rewinder Auto Online<br>Rewinder Online Deley<br>Rewinder Torque<br>Cutter Action<br>Peel Wait Delay<br>Paper Position |
| Interface | USB Device Class<br>USB VCOM Protocol<br>USB 2.0 High Speed |
| Option Interface | RS-232C Baud rate<br>RS-232C Parity<br>RS-232C Length<br>RS-232C Stop bit<br>RS-232C X-ON |

**Notes**

Detailed information is saved in the USB memory “CLS” folder in a file with extension .CFG. The file is in a unique format for the printer, so do not edit it, etc.

## Restoring printer settings from a USB memory

**1. Preparation**

When a USB memory is connected to the printer, the USB memory is displayed in the setup menu. Next, press “Load Setting.”

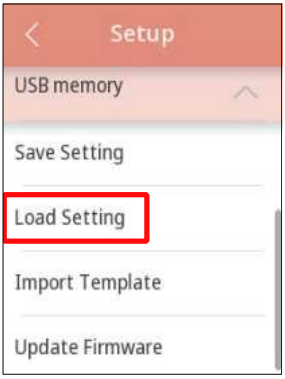


**2. Select the settings to be restored**

Select one setting from among the five settings stored on the USB memory, press the “OK” button, and the printer settings will be restored from the selected file.

For the printer setting items to be restored, refer to the “List of printer settings saved to USB Memory” in “Saving printer settings to a USB memory.”

## Importing templates for Forms Printing using the USB memory

**1. Preparation**

Create a “CLS” folder in the USB memory, and save the template file in the folder.

2. When a USB memory is connected to the printer, the USB memory is displayed in the setup menu. Next, press “Import Template.”

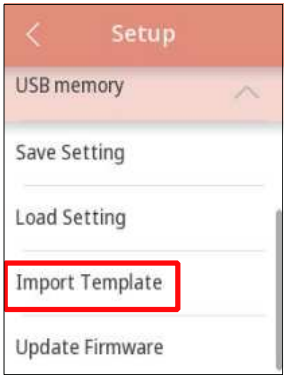

3. **Press the “OK” button at the bottom of the screen to import the template from the USB memory.**

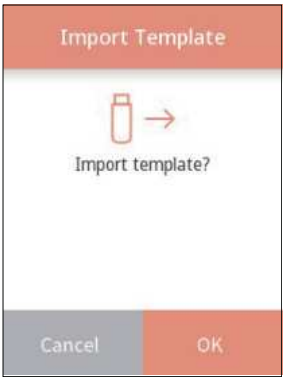


If importing is successful, the following screen is displayed.

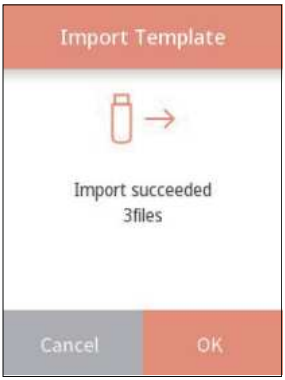


## Print preview function

Before printing, the print image can be simply displayed on the LCD screen for checking.

When the print data is sent to the printer, the following preview screen is displayed.

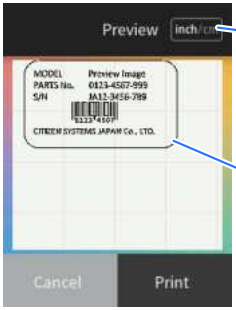


For inch display
A light red grid is displayed at about every 1 inch.

By touching the inch/cm button, the display is switched to cm.

Print image

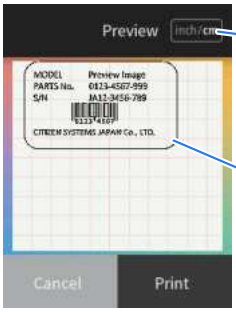


For cm display
A light red grid is displayed at about every 1 cm,
and a dark red grid is displayed at about every 5 cm.

By touching the inch/cm button, the display is switched to inch.

Print image

- The print image displayed is the first page of the job.
- Press the “Print” button to print the displayed job.
- Press the “Cancel” button to abort the displayed job without printing.
- The default state of the grid display is in accordance with the mm/inch setting or command in the menu settings.
- inch/mm button

  Toggles between grid display every 1 inch and grid display every 1 cm.

* A job is data for continuous printing. When printing with the “Print” button, even if printing stops midway, if printing of the next job occurs within 0.5 seconds, it is determined to be the same job and printing continues without a preview. If the print data is aborted with the “Cancel” button, the print data received within 0.5 seconds is aborted.

* If reprinting is performed from the top menu immediately after the job is aborted during preview, the aborted data is printed.

* A preview is not displayed for self-printing, configuration printing, and HEX dump mode. (Printed the same as with preview mode turned Off.)

* For print images that cannot entirely fit in the preview, such as long media, only the media on the printer side (the latter half that will be printed) is displayed.

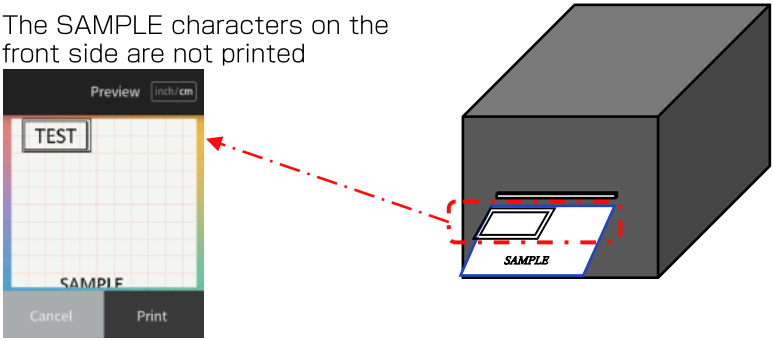


## 3.9 Emulation Auto-Detection

If a control language different from the emulation when operating with the Emulation Auto Detect setting in System Setup set to “On” or “Full Auto” is received, the emulation is automatically switched. Note that the Eltron language will not be detected.

Refer to List of Settings

**When the Emulation Auto Detect setting is set to “Full Auto”**

During startup, the saved emulation is started by “Setup” -> “System Setup” -> “Emulation Select.” Then, operation is continued with the emulation of the initially-received control language. New emulations are saved to the Emulation Select setting. At this time, automatic restart is not carried out.

If the printer is manually restarted later on, it will start up with the newly saved emulation setting. When a different control language is received without restarting, the emulation of the last received control language is saved in the command settings, and automatic restart is carried out. Note that the data received before restarting is ignored.

**When the Emulation Auto Detect setting is set to “On”**

The following message is displayed on the LCD when the Zebra® emulation (ZPI2) command is detected during Datamax® emulation.

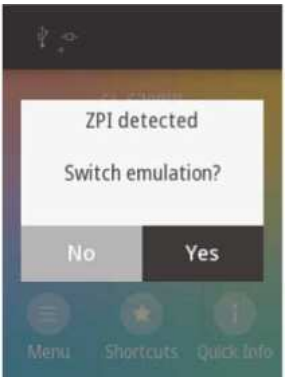


If “Yes” is selected, a restart is executed, and the printer automatically switches to Zebra® emulation (ZPI2®).

If “No” is selected, emulation is not switched, and the online state is restored.

When Zebra® emulation is set, if a Datamax® emulation (DM4/DMI/DPP) command is received, the following is displayed on the LCD.

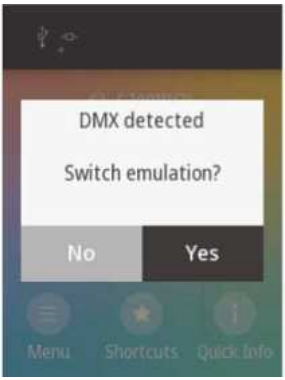


If “Yes” is selected, a restart is executed, and the printer automatically switches to Datamax® emulation (DM4/DMI/DPP).

If “No” is selected, emulation is not switched, and the online state is restored.

**Caution**

When the sub-menu “Emulation Auto Detect” in the “System Setup” main menu is set to Off, the emulation auto detection function does not operate.

If the emulation auto detection function is set to On, when the printer power is turned back on, it is enabled.

## 3.10 Calibrating the Touch Panel

If touch operation of the menu does not operate correctly, calibrate the touch panel. Calibrate the touch panel by pushing the “PAUSE” key while touching the touch panel with the printer power turned OFF, then turning the printer power ON, and waiting for a while. After a while, the screen shown on the left below is displayed. Touch “Start.” Then, the targets shown on the screen on the right below are displayed in sequence, so touch the center of the targets successively.

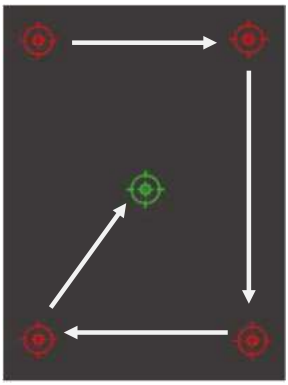

After touching all the targets, the following screen is displayed if the calibration is completed correctly. This completes calibration of the touch panel.

## 3.11 Setting the menu for the Rewinder (CL-S700 III R only)

Set the Menu Setup Mode as follows to use the rewinder function.

Refer to Menu settings

**When rewinding the liner using the peeler**

Refer to List of Settings

- Set the “Function Select (sub-menu)” setting to “Peel On.”
- When “Auto Config (sub-menu)” is set to “On,” “Peel On” is automatically selected.

# 4. Printer Adjustments

## 4.1 Sensor Adjustments

The sensing level of the label detection sensor (transparent sensor), black mark detection sensor (reflective sensor), and continuous media detection sensor (reflective sensor) are adjusted separately and independently.

### Selecting the sensor

To select the front sensor or the adjustable sensor, select the sensor to be used from “Setup” on the menu screen -> “Sensor Setup” -> “Sensor Select.”

### Adjusting the label detection sensor (see-through sensor)

1. **Select label detection sensor (see-through sensor). Select “See Through” from “Setup” on the menu screen -> “Sensor Setup” -> “Media Sensor.”**

2. **Peel a label and set the media so that only the backing paper (glassine paper) reaches the platen roller and media sensor. (In the case of media (labels) with black lines, take care to ensure that the black line does not reach the media sensor.) Then, lock the head unit.**

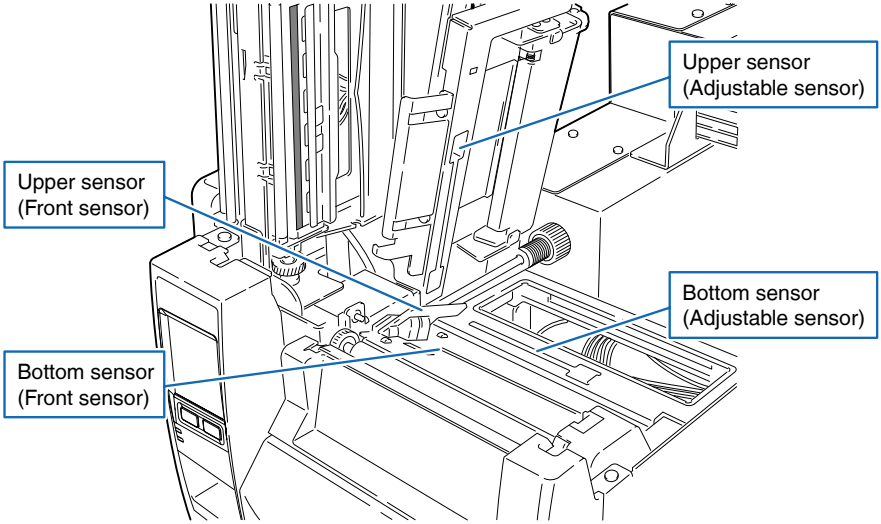


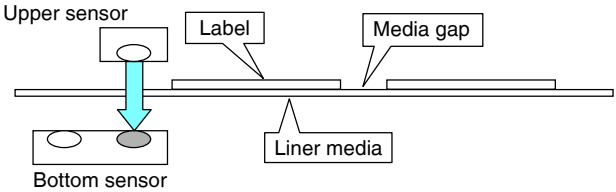

3. Adjust the sensors. Select “See Through” from “Test & Info” on the menu screen -> “Test Mode” -> “Auto Calibration,” and press the “OK” button at the bottom of the screen. Press the “Start” button on the screen displayed, and the sensor will be automatically adjusted.

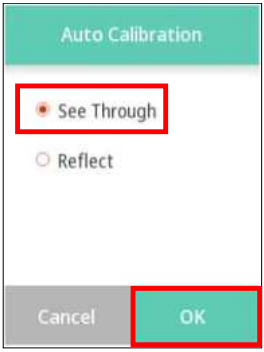


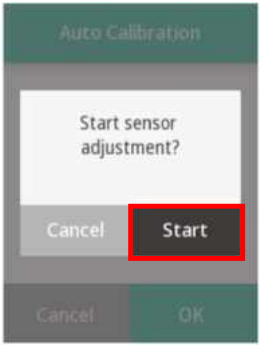

4. If the automatic adjustment is completed normally, “OK” will be displayed on the screen. If it is completed abnormally (adjustment not possible), the error LED flashes, and “Failed” will be displayed on the screen.

## Adjusting the black mark detection sensor (Reflective sensor)

1. Select the black mark detection sensor (reflective sensor). Select “Reflect” from “Set-up” on the menu screen -> “Sensor Setup” -> “Media Sensor.”

**2. Set the media so that the media covers the platen roller and media sensor.**

**Set that media so that black lines or gaps between labels do not cover the sensor.**

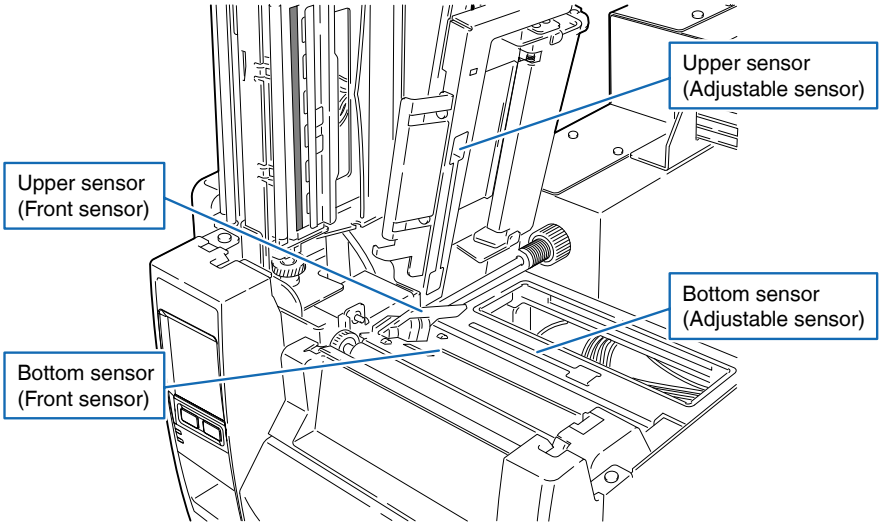


- Using continuous media and label media without gaps between labels

  Set the media so that a section without a black line (or label face stock for label media) does cover the platen roller and media sensor.

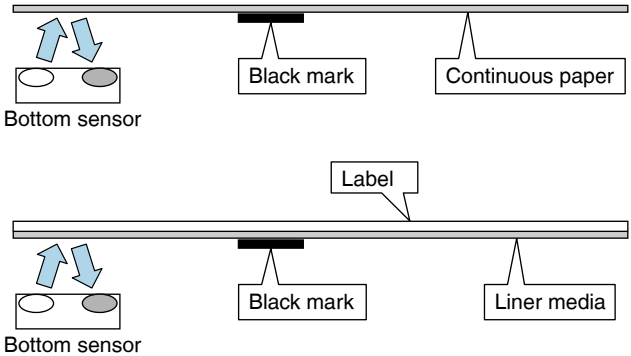


- Using label media with gaps

  Peel a label and set the media so that only the backing paper (glassine paper) reaches the platen roller and media sensor.

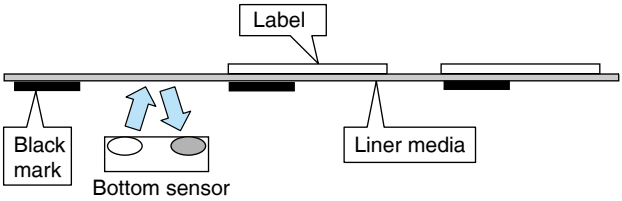


3. **Adjust the sensors. Select "Reflect" from "Test & Info" on the menu screen -> "Test Mode" -> "Auto Calibration," and press the "OK" button at the bottom of the screen. Press the "Start" button on the screen displayed, and the sensor will be automatically adjusted.**

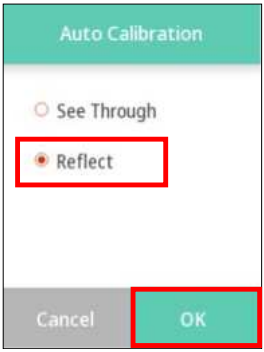


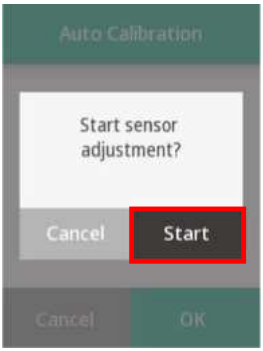

4. **If the automatic adjustment is completed normally, "OK" will be displayed on the screen. If it is completed abnormally (adjustment not possible), the error LED flashes, and "Failed" will be displayed on the screen.**

## Adjusting the continuous media detection sensor (Reflective sensor)

1. **Select the continuous media detection sensor (reflective sensor). Select "None" from "Setup" on the menu screen -> "Sensor Setup" -> "Media Sensor."**

2. **Set the media so that the media covers the platen roller and media sensor. If the media has black lines, do not set the media so that a black line is between the sensors.**

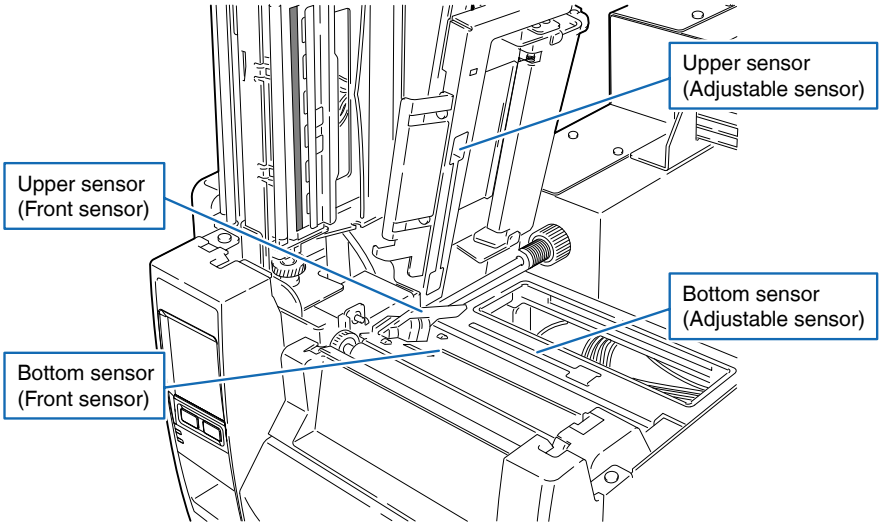


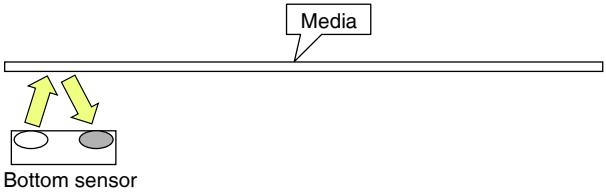


3. **Adjust the sensors. Select "Reflect" from "Test & Info" on the menu screen -> "Test Mode" -> "Auto Calibration," and press the "OK" button at the bottom of the screen. Press the "Start" button on the screen displayed, and the sensor will be automatically adjusted.**

4. **If the automatic adjustment is completed normally, “OK” will be displayed on the screen. If it is completed abnormally (adjustment not possible), the error LED flashes, and “Failed” will be displayed on the screen.**

# 4.2 Media Thickness Adjustment

The printer is already factory-set to the requirements of proper print quality while using the recommended labels. If the print quality is inferior because of the different type of media, adjust the printhead position in the following manner:

Refer to Loading roll media

## When using standard labels, or thermal media

1. **Looking in at the media thickness check window, reset the printhead offset so that it comes to the center line (middle of the three lines) by turning the media thickness adjustment screw with a screwdriver.**

2. **Then turn the media thickness adjustment screw two to four times counterclockwise with a screwdriver. (Factory setting: two turns.)**

3. **Make fine adjustments by checking the self-test print.**

Refer to Self Print

## When using thick media (tags or other media)

1. **Looking in at the media thickness check window, reset the printhead position so that it comes to the center line (middle of the three lines) by turning the media thickness adjustment screw with a screwdriver.**

2. **Then turn the media thickness adjustment screw two to four times clockwise with a screwdriver.**

3. **Make fine adjustments by checking the self-test print.**

Refer to Self Print

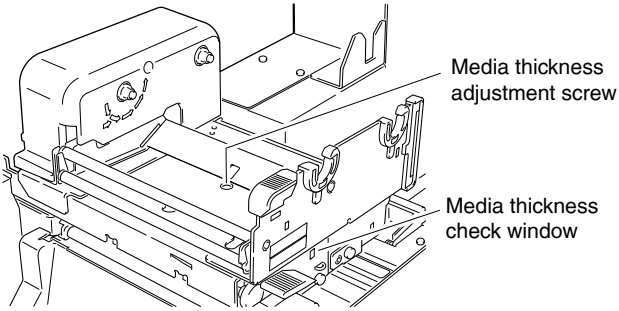


The relationship between the printhead heating element and the media thickness check window is shown below:

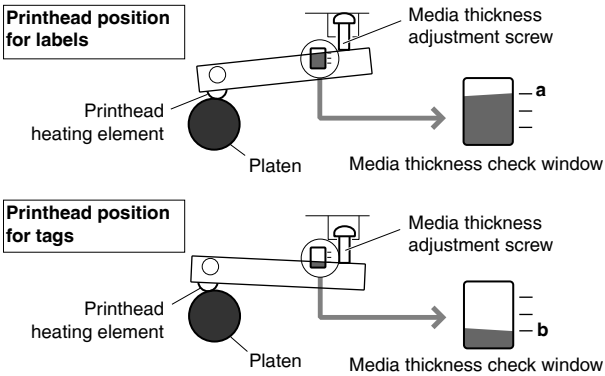

# 4.3 Media Width Adjustment

The printer is already factory-set to the value of media width: 112 mm (4.4 in). When you use narrow media, adjust the printhead pressure in the following:

Refer to Loading roll media

1. **Looking in at the check window on the upper frame, align the mark (the left end of white plastic) with the width of media by turning the media width adjustment knob. (The printhead must be closed.)**

2. **Make fine adjustments by checking the self-test print.**

Refer to Self Print

**When the print on right side is too light:**

Move the mark (white) to the right side by turning the media width adjustment knob clockwise.

**When the print on the left side is too light:**

Move the mark to the left side by turning the media width adjustment knob counterclockwise.

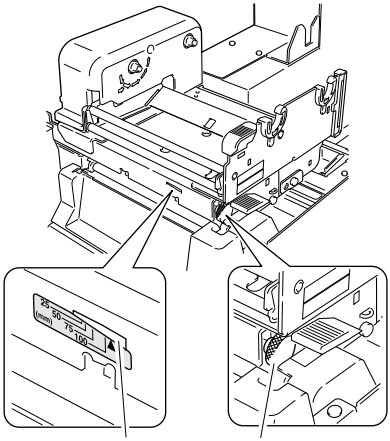


Media width check window

Media width adjustment knob

| Check window | Width of media | |
|---|---|---|
| 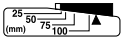 | 25.4 mm | 1 inch |
| 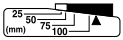 | 50.8 mm | 2 inch |
| 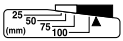 | 76.2 mm | 3 inch |
| 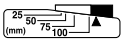 | 101.6 mm | 4 inch |
| 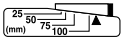 | When ribbon wrinkles or media screws with media width of 4 in or more | |
| 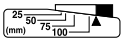 | Factory setting | |

# 4.4 Adjusting the Ribbon

Ribbon tension in this printer is already adjusted for the recommended ink ribbon and media and is very tolerant to different types of media. However, it may slip due to imperfect combinations of ribbon and media and it is possible that you will see a “Ribbon End” message even though the ribbon is not finished. This is more likely to happen with narrow width ribbons, especially those less than 50mm (2 inches).

To resolve this problem and obtain the optimum printing condition, make adjustments in the following manner (this should be done after the printhead pressure adjustments on the previous page are made):

* Perform this adjustment after the previous section “4.3 Media Width Adjustment.”

**Refer to 3.7 Setting the Ribbon**

**Refer to 4.3 Media Width Adjustment**

## Adjusting Places

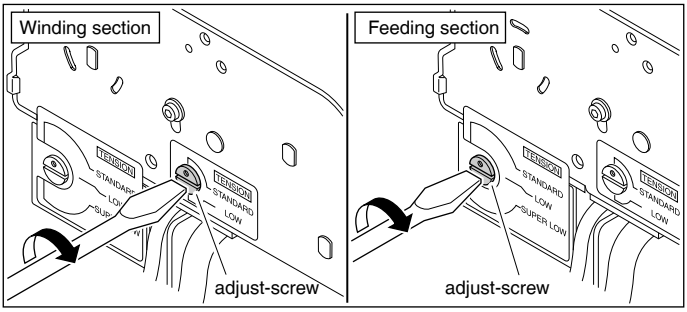


When turning adjust-screw, use a flat-tip screwdriver.

## Adjusting Method

### 1. General ribbon and media

Factory setting: both marks on winding and feeding sections are set to STANDARD so as to obtain the optimum printing condition for the recommended ink ribbon and media.

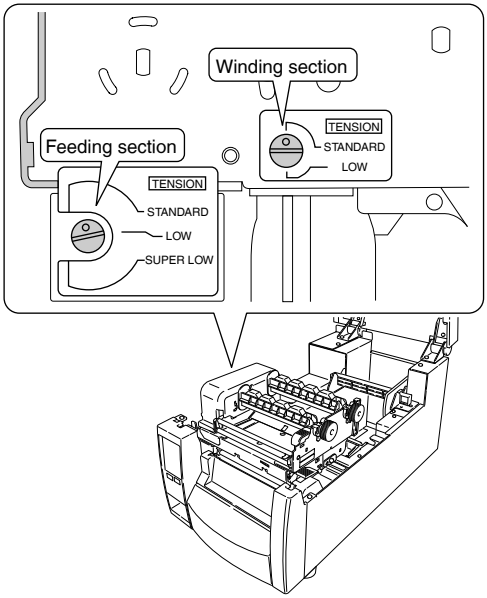


### 2. Easy-to-slip ribbon and media

If a message “Ribbon Out” is shown, set the mark on the feeding section to LOW by turning the adjust-screw.

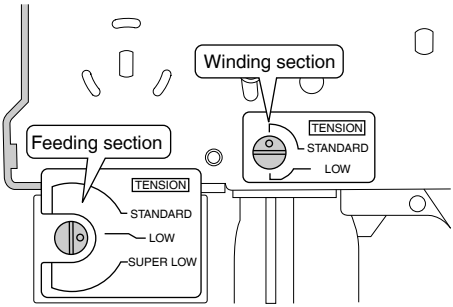

**3. Especially-easy-to-slip ribbon and media**

If a message “Ribbon Out” is still shown, although Step 2 has been performed, set the mark on the feeding section to SUPER LOW by turning the adjust-screw.

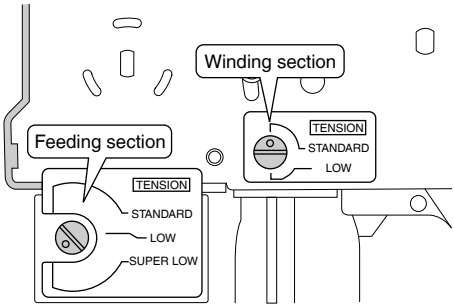


**4. When ribbon is broken during printing**

Ribbon may be broken if it is narrow in width and printhead heat temperature is high. In that case, set the mark on the feeding section to SUPER LOW and set the mark on the winding section to LOW by turning adjust-screw respectively.

If the problem is still not resolved, please contact our service personnel.

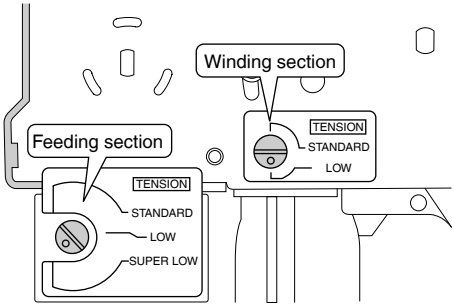

# 4.5 Adjustable Sensor Position Adjustment

## Operating procedure

Measure your required detection position beforehand, using the scale on the upper guide rail. Move the adjustable sensor to the required detection position by tuning the adjustable knob; it is useful to align the yellow mark on the top of the adjustable sensor with the scale showing the required detection position.

Refer to List of Settings

| Notes |
| --- |
| Enabled only when an adjustable sensor is selected |

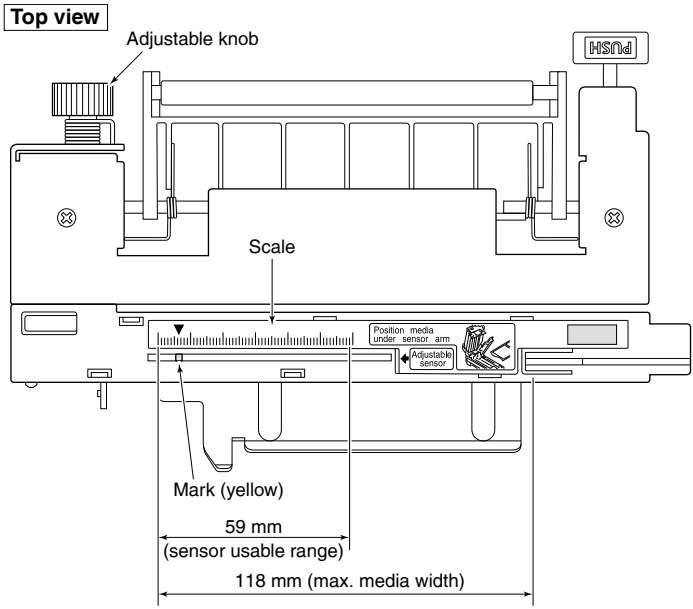

# 4.6 Cleaning

Wipe off any foreign objects such as media dust, dirt and adhesive substances built up around the printhead and platen with the head cleaning pen (head cleaner) provided, and use a soft cloth soaked in ethyl alcohol for the platen etc.

It is particularly important to clean the thermal printhead after printing on thermal media for long periods, which will guarantee the print quality and extend the life of the thermal printhead.

**Caution**

- Always use the head cleaner when cleaning the thermal printhead.
- The thermal head is hot immediately after printing. Do not touch the thermal head at this time
- Do not touch the thermal head with bare hands or do not allow metals to come into contact with the thermal head.

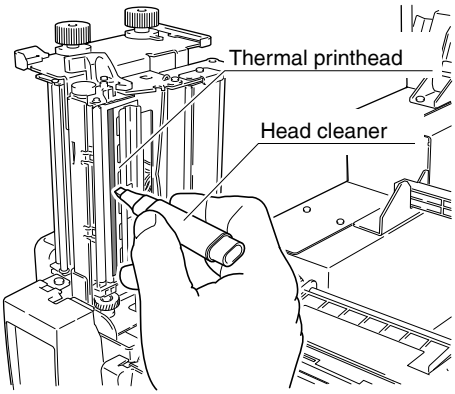


To clean the entire surface of the platen, rotate the platen little by little with your thumb using a cheese cloth. Do not touch the platen with your bare hands.

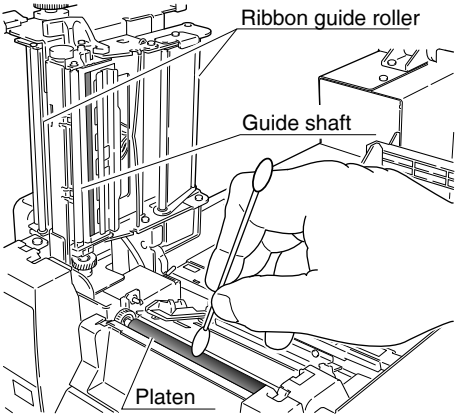


If the glue of the label media adheres to the roller, the peeled liner will stick and can cause a jam. Remove the glue adhered to the roller by using a cloth or something similar soaked in alcohol.

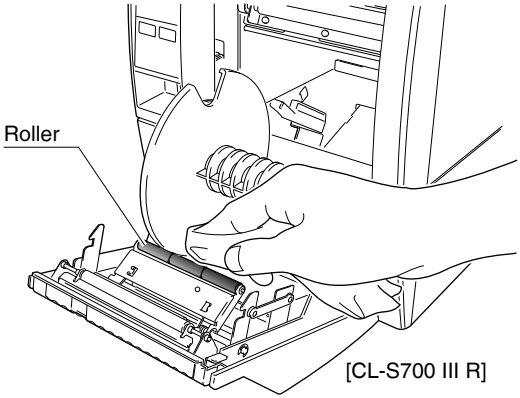


**Caution**

Do not use any solvent other than ethyl alcohol. Solvents such as benzene, acetone and thinner will dissolve plastic parts and destroy the thermal printhead, platen and much of the printer!

Try to avoid using “excessive amounts” of ethyl alcohol to clean the platen. Excessive use will harden the platen surface prematurely.

# 5. Troubleshooting

When an error/alarm occurs, refer to the illustration displayed on the printer LCD, or refer to the URL of the QR code displayed.

For other problems, refer to the following. If the problem is not corrected even though action has been taken, contact your retailer's service personnel.

| Symptom | Check | | Corrective action |
|---|---|---|---|
| The LED do not light up when printer power is connected. | 1 | Is the plug of the power cord correctly inserted into the electric outlet? | Insert the plug of the power cord correctly in the electric outlet. |
| | 2 | Is the connector of the power cord correctly inserted into the power inlet of the printer? | Insert the connector of the power cord correctly into the power inlet of the printer. |
| | 3 | Is the power cord damaged? | Replace the power cord. Consult with the dealer where the printer was purchased to make sure you obtain a cord made especially for the printer. **Note:** Do not use any power cord except one made especially for the printer. |
| | 4 | Is power supplied to the electric outlet the printer is connected to? | Check to make sure power is supplied to the outlet. If there are any problems, make sure power is supplied to the building. Or find out if a power failure has occurred. |
| | 5 | Is the main fuse in the building's fuse box burnt out? | If necessary, replace the main fuse in the building's fuse box, and reset the main breaker. Ask a qualified serviceman to carry out the replacement. |

**Refer to 2.3 Connection to Power**

| Symptom | Check | | Corrective action |
|---|---|---|---|
| Paper is feeding, but nothing is printed. | 1 | Is the thermal printhead dirty? Is a label stuck to the head? | If it is dirty, remove the dirt with the attached head cleaner. If a label is stuck to the thermal printhead remove it. **Note:** Do not use a metal object to remove a label stuck to the inside of the printer. (This may damage the thermal printhead.) If adhesive label material is stuck to the thermal printhead, remove it with a soft cloth soaked in ethyl alcohol. |
| | 2 | Is the recommended ribbon or a ribbon of the same type used? | Use the recommended ribbon or a ribbon of the same type. |

**Refer to 4.6 Cleaning**

**Refer to 3.7 Setting the Ribbon**

| Symptom | Check | | Corrective action |
|---|---|---|---|
| The printer is not printing neatly. | 1 | Are the media and the ribbon correctly set? | Correctly set the media and the ribbon. |
| | 2 | Is the printing density too high or too low? | Set the appropriate printing density using the menu or control software. |
| | 3 | Is the platen dirty? Is it deformed? | If it is dirty, clean it with ethyl alcohol. If it is deformed, replace it.<br>**Note:** Consult with the dealer that supplied the printer concerning the replacement. |
| | 4 | Is the thermal printhead dirty? Is a label stuck to the head. | If it is dirty, remove the dirt with the attached head cleaner. If a label is stuck to the head, remove it.<br>**Note:** Do not use a metal object to remove a label stuck to the inside of the printer. (This may damage the thermal printhead.) If adhesive label material is stuck to the print head, remove it with a soft cloth soaked in ethyl alcohol. |
| | 5 | Is the recommended ribbon or a ribbon of the same type used? | Use the recommended ribbon or a ribbon of the same type. |
| | 6 | Is the thermal printhead in the correct position for the media that is used? | Adjust the offset of the thermal printhead with the media thickness adjustment dial. |
| | 7 | Is the printer's head pressure balance correct for the width of the media that is used? | Adjust the thermal printhead pressure with the media width adjustment dial. |

**Refer to 3.6 Setting the Media**

**Refer to 3.7 Setting the Ribbon**

**Refer to Menu settings**

**Refer to 4.6 Cleaning**

**Refer to 4.2 Media Thickness Adjustment**

**Refer to 4.3 Media Width Adjustment**

| Symptom | Check | | Corrective action |
|---|---|---|---|
| The printing position changes. | 1 | Are the media and the ribbon correctly set? | Correctly set the media and the ribbon. |
| | 2 | Is the platen dirty? Is it deformed? | If it is dirty, clean it with ethyl alcohol. If it is deformed, replace it.<br>**Note:** Consult with the dealer that supplied the printer concerning the replacement. |
| | 3 | Are the data contents and the command signals from the host appropriate? | If an error message is displayed, check the content of the software and the communication status set by the host computer. |
| | 4 | Are the menu values set appropriately? | Set the correct menu values using the operating panel or the host computer. |
| | 5 | Are the sensitivities of the media sensors appropriate for the media that is used? | Set the media sensitivity to appropriate values. If this does not solve the problem, change the “Sensor level” that is set in the “System setup.” |

**Refer to 3.6 Setting the Media**

**Refer to 3.7 Setting the Ribbon**

**Refer to 4.6 Cleaning**

**Refer to 3.3 LED Functions**

**Refer to Menu settings**

| Symptom | Check | | Corrective action |
|---|---|---|---|
| The ribbon is wrinkled | 1 | Is the ribbon tension suitable for the ribbon that is used? | Adjust the tension with the adjust screw. |
| | 2 | Is the ribbon used correctly balanced to the right and left? | Adjust the left - right balance with the media width adjustment knob. |
| | 3 | Is the printing density too high? | Set the appropriate printing density using the menu or control software. |
| | 4 | Are the media and ribbon the recommended products or equivalent products? | Use the recommended products or equivalent products. If this does not correct the problem, contact a service representative. |

**Refer to 4.4 Adjusting the Ribbon**

| Symptom | Check | | Corrective action |
|---|---|---|---|
| The ribbon slips (ribbon dirt is produced.) | 1 | Is the ribbon tension suitable for the ribbon that is used? | Adjust the tension with the adjust screw. |

**Refer to 4.4 Adjusting the Ribbon**

| Symptom | Check | | Corrective action |
|---|---|---|---|
| The ribbon does not wind. | 1 | Is the ribbon set in the correct course? | Set the ribbon in the correct course. |
| | 2 | Is the ribbon winding direction reversed? | Set the correct winding direction. |

**Refer to 3.7 Setting the Ribbon**

# 6. Appendixes

## 6.1 Specifications

### Printing

| Item | Description | | |
|---|---|---|---|
| Printing method | Thermal transfer/Direct thermal | | |
| Resolution | CL-S700 III/ CL-S700 III R | Main scanning line density | 203 dot/inch (8 dot/mm) |
| | | Sub- scanning line density | 203 dot/inch (8 dot/mm) |
| | | Head | 864 dots (printable dots: 832 dots) |
| | CL-S703 III | Main scanning line density | 300 dot/inch (11.8 dot/mm) |
| | | Sub- scanning line density | 300 dot/inch (11.8 dot/mm) |
| | | Head | 1275 dots (printable dots: 1240 dots) |
| Max. print width | CL-S700 III/ CL-S700 III R | 104 mm / 4.1 inch | |
| | CL-S703 III | 105 mm /4.1 inch | |
| Max. print length | CL-S700 III/ CL-S700 III R | 2539.7 mm /99.99 inch | |
| | CL-S703 III | 1625.6 mm / 64.00 inch | |

### Printing speed

| Item | Description | |
|---|---|---|
| Printing speed setting | CL-S700 III | 2 to 12 inches per second |
| | CL-S703 III/CL-S700 III R | 2 to 10 inches per second |
| | CL-S700 III/CL-S703 III | 2 to 7 inches per second (With optional peeler) |
| | CL-S700 III R | 2 to 7 inches per second (With optional peeler) |

### Print mode

| Item | Description |
|---|---|
| Batch mode | Normal printing (single or multiple sheets) |
| Tear off mode | Feeds back media to the tear-off position after printing is completed. |
| Cut mode *1 | Prints while cutting at designated sheet units. The following two kinds of cut mode operations are done.<br>• Backfeed<br>• Cut through<br>(Cut through refers to stopping part-way through printing the 'next label' to make the cut. After cutting, printing restarts but there is a chance of a small gap or mark at the temporary stop position.) |
| Peel mode *1 | Peels labels from the liners after printing them. |

*1 Options can be separately purchased.

## Media

| Item | Description | |
|---|---|---|
| Types of media | Roll, fanfold<br>(Continuous media, die-cuts, continuous tags. paper or tickets)<br>When the print speed is set to 11-12 IPS at CL-S700III, the inner roll paper cannot be used. | |
| Recommended media | Thermal transfer: Label media (LINTEC Corporation LR1111)<br>Direct thermal media: Label media (Ricoh 150LA-1), tag media (Ricoh 130LHB) | |
| Max. media width | 118.0 mm / 4.65 inch | |
| Min. media width | 25.4 mm / 1.00 inch | |
| Min. label width | 7.62 mm / 0.30 inch | |
| Min. label pitch<br>*1 | 6.35 mm / 0.25 inch | |
| Max. media thickness | 0.254 mm / 0.01 inch | |
| Max. media length | CL-S700 III/CL-S700 III R | 2539.7 mm / 99.99 inch |
| | CL-S703 III | 1625.6 mm / 64.00 inch |
| Min. media length | 6.35 mm / 0.25 inch | |
| Min. media thickness | 0.0635 mm / 0.0025 inch | |
| On-board roll media diameter | Max. outside diameter: 203 mm / 8 inch<br>Media core: 38～76 mm / 1.5～3 inch | |
| Rewinding roll media diameter (CL-S700 III R only) | Media core: 26, 40, 45 mm / 1.02, 1.57, 1.77 inch | |

*1 When a media pitch of less than 1 inch is used, activate the "Small Media Adjustment" setting in the "Page Setup."

## Ribbon

| Item | Description |
|---|---|
| Recommended ribbon | B110A Ricoh |
| Max. ribbon width | 114.0 mm / 4.50 inch |
| Min. ribbon width | 25.4 mm / 1.00 inch |
| Max. ribbon length | 450.0 m / 1476 feet |
| Max. roll diameter | 86.5 mm / 3.40 inch |
| Inner diameter of the paper core | 25.4 ±0.254 mm / 1.00 ±0.01 inch |
| Ribbon end tape length | 80 mm / 3.15 inch |
| Ribbon end detection | Ribbon out is detected by the ribbon sensor |

## Bar code

| Item | | Description |
|---|---|---|
| Datamax® emulation | One-dimension | •Code3of9 / •UPC-A / •UPC-E / •EAN-13 (JAN-13) /<br>•EAN-8 (JAN-8) / •Interleaved2of5 / •CODE128 /<br>•HIBC (Modulus 43-used code 3 of 9) / •CODABAR (NW-7) /<br>•Int2of5 (Modulus10-used Interleaved 2 of 5) / •Plessey /<br>•CASE CODE •UPC2DIG ADD / •UPC5DIG ADD /•Code93 /<br>•Telepen / •ITF14 / •ITF16 / •Matrix2of5 / •COOP2of5 |
| | Two-dimension | •MaxiCode / •PDF-417 / •Data Matrix / •QR Code /<br>•Aztec / •GS1 Databar Omnidirectional (RSS-14) /<br>•GS1 Databar Truncated (RSS-14 Truncated) /<br>•GS1 Databar Stacked (RSS-14 Stacked) /<br>•GS1 Databar Stacked Omnidirectional (RSS-14 Stacked Omnidirectional) /<br>•GS1 Databar Limited (RSS Limited) /<br>•GS1 Databar Expanded (RSS Expanded |
| Zebra® emulation | One-dimension | •Code11 / •Interleaved2of5 / •Code39 / •EAN-8 / •UPC-E /<br>•Code93 / •Code128 / •EAN-13 / •Industrial2of5 /<br>• Standard2of5 / •ANSI CODABAR / •LOGMARS / •MSI / •Plessey /<br>•UPC/EAN Extensions / •UPC-A / •POSTNET / •Planet |
| | Two-dimension | •Code49 / •PDF-417 / •CODABLOCK / •MaxiCode /<br>•Micro PDF-417 / •Data Matrix / •QR Code / •TLC39 /<br>•Aztec / •GS1 Databar Omnidirectional (RSS-14) /<br>•GS1 Databar Truncated (RSS-14 Truncated) /<br>•GS1 Databar Stacked (RSS-14 Stacked) /<br>•GS1 Databar Stacked Omnidirectional (RSS-14 Stacked Omnidirectional) /<br>•GS1 Databar Limited (RSS Limited) /<br>•GS1 Databar Expanded (RSS Expanded) |
| Eltron® emulation | One-dimension | •Code39 / •Code93 / •Code128 / •Codabar / •EAN-8 /<br>• EAN-13 / •German Postal Code / •Interleaved2of5 / •POSTNET / •Planet /<br>•Japanese Postnet / •UCC/EAN-128 / •UPC-A / •UPC-E /<br>•UPC-Interleaved2of5 / •Plessey (MSI-1) / •MSI-3 |
| | Two-dimension | •Aztec / •Data Matrix / •MaxiCode / •PDF-417 / •QR Code /<br>•GS1 Databar Omnidirectional (RSS-14) /<br>•GS1 Databar Limited (RSS Limited) /<br>•GS1 Databar Stacked (RSS-14 Stacked) /<br>•GS1 Databar Truncated (RSS-14 Truncated) |

## Font

| Item | Description |
|---|---|
| Datamax® emulation | 1. Seven kinds of fixed pitch font<br>• Overseas, English fonts and European fonts<br>2. OCR fonts<br>OCR-A, OCR-B*1<br>3. Proportional fonts<br>CG Triumvirate smooth font<br>CG Triumvirate bold smooth font<br>CS Sans CJK<br>203 dpi: 6, 8, 10, 12, 14, 18, 24, 30, 36, 48 points<br>300 dpi: 4, 5, 6, 8, 10, 12, 14, 18, 24, 30, 36, 48 points<br>Character set: Conforms with code page 850 standards<br>4. TrueType™ rasterizer*2 |

| Item | Description |
|---|---|
| Zebra® emulation | 1. Five kinds of fixed pitch font<br>• Overseas, English fonts and European fonts<br>2. OCR fonts<br>OCR-A, OCR-B*1<br>3. Proportional fonts<br>CG Triumvirate Condensed Bold<br>CS Sans CJK<br>4. TrueType™ rasterizer*2 |
| Eltron® emulation | 1. Five kinds of fixed pitch font<br>• Overseas, English fonts and European fonts<br>2. Two kinds of fixed pitch font<br>• Numbers only |

*1 Depending on the reader, OCR font recognition may be poor.

*2 UFST™ and TrueType™ rasterizer are licensed from Monotype Imaging, Inc.

## Symbol set*2

| Item | Description |
|---|---|
| Single-Byte sets (Datamax® / Zebra® emulation) | •PC866U Ukraina*1 / •PC Cyrillic /<br>•ISO 60 Danish/Norwegian / •Desk Top /<br>•ISO 8859/1 Latin 1 / •ISO 8859/2 Latin 2 /<br>•ISO 8859/9 Latin 5 / •ISO 8859/10 Latin 6 /<br>•ISO 8859/7 Latin/Greek / •ISO 8859/15 Latin 9 /<br>•ISO 8859/5 Latin/Cyrillic / •ISO 69:French /<br>•ISO 21:German / •ISO 15:Italian / •Legal, Math-8 /<br>•Macintosh / •Math / •PC-858 Multilingual /<br>•Microsoft Publishing / •PC-8 / •Code Page 437 /<br>•PC-8 D/N / •Code Page 437N / •PC-852 Latin 2 /<br>•PC-851 Latin/Greek / •PC-862 Latin/Hebrew /<br>•Pi Font / •PC-850 Multilingual /<br>•PC-864 Latin/Arabic / •PC-8 TK / •Code Page 437T /<br>•PC-1004 / •PC-775 Baltic / •Non-UGL /<br>•Generic Pi Font / •Roman-8 / •Roman-9 /<br>•ISO 17:Spanish / •ISO 11:Swedish / •Symbol /<br>•PS Text / •ISO 4:United Kingdom / •ISO 6:ASCII /<br>•Ventura International / •Ventura Math / •Ventura US /<br>•Windows 3.1 Latin 1 / •Wingdings /<br>•Windows 3.1 Latin 2 /<br>•Windows 3.1 Baltic (Latv, Lith) /<br>•Windows 3.0 Latin 1 /<br>•Windows Latin/Cyrillic /<br>•Windows 3.1 Latin 5 |
| Double-byte sets (Datamax® emulation) | •EUC / •JIS / •Shift JIS / •Unicode /<br>•KS Code / •GB Code / •UTF-8 |

*1 “PC866U Ukrainian” is supported only in Datamax® emulation.

*2 Use it when drawing a TrueType font. Eltron® emulation does not support a TrueType font.

## Control language

| Description |
|---|
| Supports the Datamax® language, Zebra® language and Eltron® language |

## Outline of electronic devices

| Item | Description |
|---|---|
| CPU | 32-bit RISC CPU |
| ROM | Standard equipment: FLASH ROM 256 MBytes (User area: 24 MBytes) |
| RAM | Standard equipment: DDR SDRAM 256 MBytes (User area: 4 MBytes) |

## Media detection sensors

| Item | Description |
|---|---|
| Transparent sensor | Detects media gap between labels, notches on tags, and media out |
| Reflective sensor | Detects reflective mark on back of media and media out |
| Label peeling sensor *1 | |

*1 Options can be separately purchased.

## Communication interfaces

| Item | Description |
|---|---|
| USB | USB2.0 Compatible (High-speed 480 Mbps) |
| LAN | Wired LAN (100BASE-TX / 10BASE-T) |

## Communication interface options

| Item | | Description |
|---|---|---|
| Serial | | 2400 4800 9600 19200 38400 57600 115200 bps |
| Parallel | | IEEE1284 (Compatible / Nibble / ECP Mode) |
| Wired LAN | IF1-EFX1 | Ethernet (100BASE-TX / 10BASE-T) |
| | IF1-EFX3 | |
| | IF1-EFX2 | Ethernet (100BASE-TX/10BASE-T) +<br>USB 2.0 high-speed compatible x 2 |
| Wired LAN / Wireless LAN | IF1-ES04 | Ethernet (10BASE-T/100BASE-TX/1000BASE-T) +<br>IEEE 802.11 b/g/n:2.4 GHz, IEEE 802.11 a/n/ac:5 GHz |
| | IF1-WFX4 | IEEE802.11n, IEEE802.11a, IEEE802.11g, IEEE802.11b +<br>Ethernet (10BASE-T/100BASE-TX/1000BASE-T) +<br>USB 2.0 high-speed compatible |

## Indications and switches

| Item | Description |
|---|---|
| LCD | 240 x 320 dots TFT graphic LCD (resistive touch panel) |
| LED | POWER, ERROR |
| Buzzer | Alarms, errors, etc. |
| Operating panel keys | PAUSE, FEED |
| Head-up detection sensor | Detects head open |
| Rewinder cover detection sensor (CL-S700 III R) | Detects rewinder cover open |
| Power switch | Turns power on and off |

## Power

100-240 V (-10%+6%), 3.5-1.5 A, 50/60 Hz

## Applicable standards

UL, cUL, FCC, IC, CE, UKCA *

* Please contact us for information on other regions and the latest status such as standardnumbers.

## Environment

Operating temperature conditions: Operating temp. 0 to 40°C, humidity 30 to 80%, condensation free

(Conditions: ventilation, and natural convection)

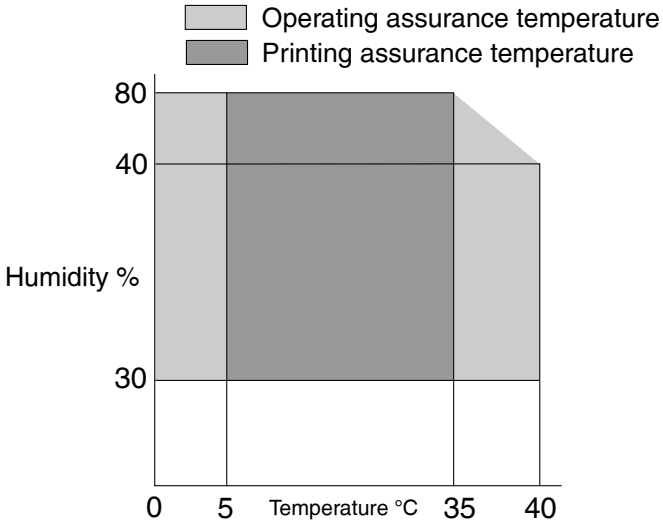


Storage temperature conditions: Temp. –20 to 60°C, humidity 5 to 85%

Note:

- Conditions: ventilation, and natural convection
-
-

* However, for storage at high temperature and humid environments, the combination of 40°C and 85% RH (no condensation) is taken as the worst value.

## External dimensions

* Dimensions are design values. Actual dimensions may vary due to variance in manufacturing processes.

Approx. 255 (W) × 490 (D) × 265 (H) mm / 10 (W) × 19.3 (D) × 10.4 (H) inch
(CL-S700 III/CL-S703 III)

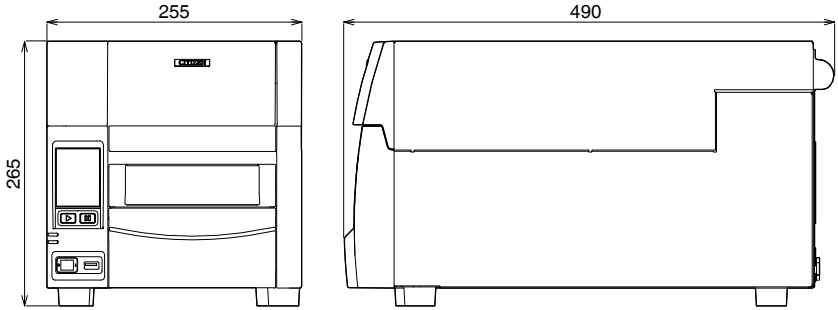


Approx. 255 (W) × 489 (D) × 385 (H) mm/ 10 (W) × 19.3 (D) × 15.2 (H) inch
(CL-S700 III R)

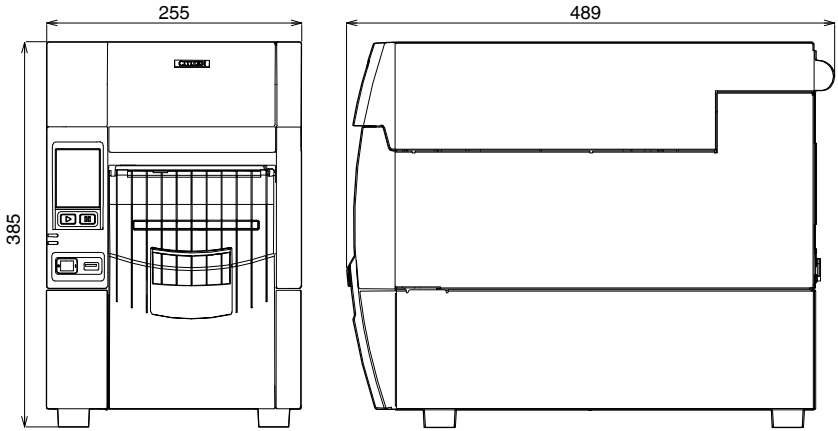


## Weight

Approx. 13.5 kg (CL-S700 III/CL-S703 III)

Approx. 18.5 kg (CL-S700 III R)

## Accessories

- Quick start guide*

- Power cord
- Media holder bar and Media holder guide
- Ribbon holder
- Paper core

* You can download the driver, SDK, utility and BarTender (label creation software) from the URL listed in the Quick Start Guide.

**Option**

- Auto-cutter unit
- Peeler unit
- Serial interface board
- Parallel interface board
- Wired LAN interface board
- Wireless LAN interface board
- Rewinder kit

# 6.2 Interfaces

This printer is connected to a computer and prints according to commands sent from the computer.

There are two methods of connection to the computer that can be used to connect to a compatible device. In addition, as options, the computer can be connected by serial, parallel, wired LAN, and wireless LAN connections.

## USB Interface

### Specifications

| | |
|---|---|
| Standards | Complies with Universal Serial Bus Specification 2.0 |
| Transmission speed | 480 Mbps (High-Speed) / 12 Mbps (Full-Speed) |
| Receive buffer | 16 kB |
| Connector | USB Type B |

### Signal line and pin arrangement

| Pin No. | Signal code | Signal | Function |
|---|---|---|---|
| 1 | VBUS | USB power | USB power (+5 V) |
| 2 | D – | Signal line – | – signal line |
| 3 | D + | Signal line + | + signal line |
| 4 | GND | GND | GND |

## Wired LAN interface

### Support protocol

| | |
|---|---|
| Network layer | ARP, IP, TCP |
| Transport layer | TCP, UDP |
| Application layer | DHCP, HTTP, SNMP, Raw Socket Port |

### Raw Socket Port

Perform two-way communication of print data and printer status.

| | |
|---|---|
| Port No. | 9100 (user-configurable) |
| Port communication direction | Two-way |
| Socket max. connections | 8 |
| Printable connections | 1 (other sockets are reserved) |
| Timeout | Default value: 60 sec<br>Can be set between 0 and 300.<br>No timeout when “0” is set. |

### HTTP Server

Settings of printer unit and network are done by LinkServer Web Interface.

For details, see “LinkServer Web Interface Configuration”.

Refer to Configuring Printer Settings Using LinkServer

| | |
|---|---|
| Port No. | 80 |
| Max. simultaneous connections | 4 |
| HTTP version | HTTP/1.1 |

### DHCP

IP address is automatically obtained from DHCP server within 60 seconds after power is connected.

If the address cannot be obtained automatically, fixed IP address (default value: 169.254.1.10) is applied.

### SNMP Agent

By using the SNMP agent function, responses are provided to requests from the SNMP manager.

| | |
|---|---|
| SNMP Version | SNMPv2 (Trap function is not supported) |
| Port No. | 161 |
| Supported MIB | HOST-RESOURCES-MIB, Citizen-MIB (Private) |
| Community name | public |

### Connector Connections

- Compatible connectors

  Printer: RJ-45 connector

**Caution**

- Please do not insert the USB cable by mistake. Doing so may damage the cable and connector.
- With the wired LAN interface that is provided as standard, data in XML format cannot be printed.

| Pin No. | Signal name | Function |
|---|---|---|
| 1 | TX+ | Send (+) |
| 2 | TX- | Send (–) |
| 3 | RX+ | Receive (+) |
| 4 | N.C | - |
| 5 | N.C | - |
| 6 | RX- | Receive (–) |
| 7 | N.C | - |
| 8 | N.C | - |

### Function of LED

The indications by LED are given below.

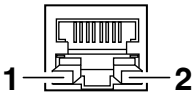


1: Network communication speed display

| Communication speed | LED (green) |
|---|---|
| 100 Mbps | ON |
| 10 Mbps/disconnected | Blink |

2: Network status display

| Display description | LED (yellow) |
|---|---|
| Connected | ON |
| Disconnected | OFF |
| Communicating data | Blink |

## Configuring Printer Settings Using LinkServer

Printer and network settings can be configured using a Web browser or Android app via the printer's built-in LinkServer function.

| Notes |
|---|
| For Android, you need to download the app and provide a USB cable yourself. |

The Android app can be downloaded from Google Play.

https://play.google.com/store/apps/details?id=com.citizen.app.linkserver

### LinkServer user roles

LinkServer has the following three user roles available: User, Operator, and Administrator.

The menus that appear for each user role can be changed to restrict operational access to LinkServer.

The Home screen for the user role appears when first connecting.

### LinkServer menu configuration

The following figure illustrates the LinkServer menu configuration.

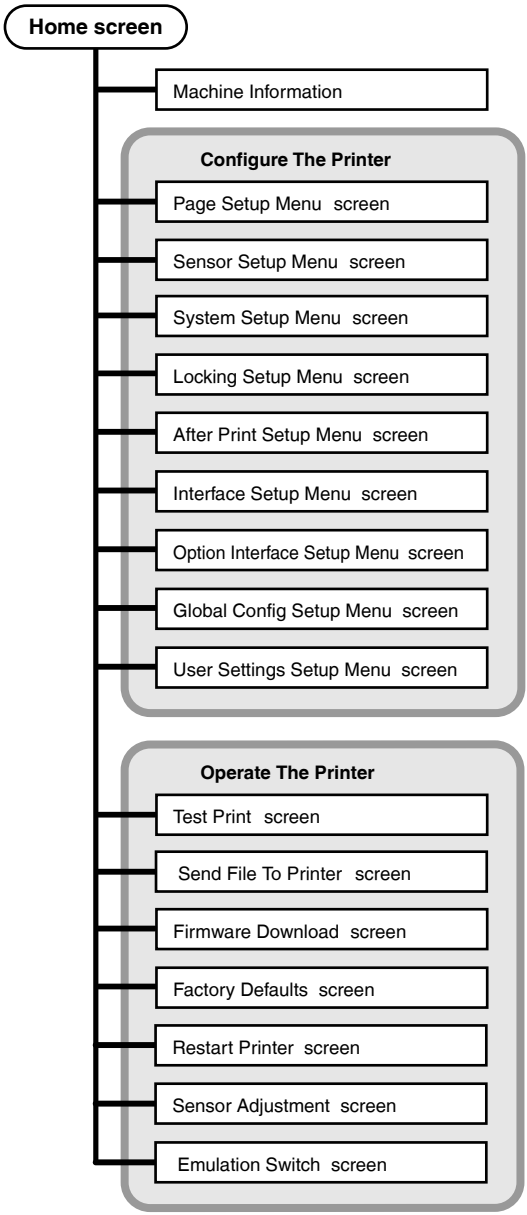
Home screen
Machine Information
Configure The Printer
Page Setup Menu screen
Sensor Setup Menu screen
System Setup Menu screen
Locking Setup Menu screen
After Print Setup Menu screen
Interface Setup Menu screen
Option Interface Setup Menu screen
Global Config Setup Menu screen
User Settings Setup Menu screen
Operate The Printer
Test Print screen
Send File To Printer screen
Firmware Download screen
Factory Defaults screen
Restart Printer screen
Sensor Adjustment screen
Emulation Switch screen

## LinkServer connection procedure

Wired LAN

1. **Open a Web browser and enter the IP address of the desired printer into the address bar (area circled in red).**

   The example illustrates the entry of “http://192.168.0.3”.

2. **Press the [LOG IN] to display the authentication window.**

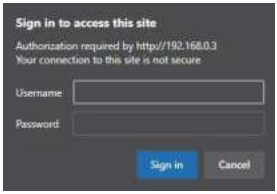

**3. Enter your user name and password.**

The default authentication credentials for the Operator role are as follows.

- User name: Operator
- Password: Operator

The default authentication credentials for the Administrator role are as follows.

- User name: Admin
- Password: Admin

The user name and password for the Operator and Administrator roles can be changed in the User Settings menu. User names and passwords can contain up to 20 single-byte, alpha-numeric characters and symbols.

After successful authentication, the Home screen for the Operator or Administrator role appears.

**Administrator Home Screen**

The menus that appear for the User and Operator roles can be changed from the User Settings menu.

**4. Press the Menu button on the Home screen to perform printer operations.**

- Printer Information: Displays printer information.
- Configure The Printer: Provides access to the same settings as configured with LabelPrinterUtility.
- Operate The Printer: Used to operate the printer.

**5. Once you are finished, press the [LOG OUT] button to log out.**

The Home screen for the User role appears again after logging out.

USB (Android device)

**1. Preparation**

You will need a so-called USB OTG (On-The-Go) adapter.

Which has a micro USB or Type-C male connecter on the Android side (depending on your Android device) and a Type-A female connecter on the other side. Then you can connect a regular USB cable for printer which has a Type-A male and Type-B male to connect to a printer.

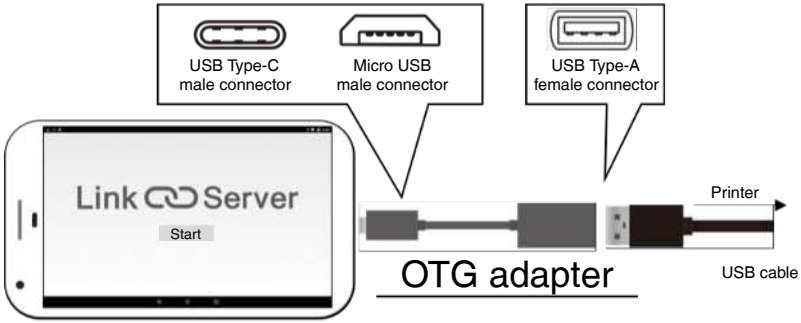

## 2. Usage

The LinkServer app automatically starts up when a supported printer model is connected by USB to your Android device.

The app shows you the printer information or lets you set up the printer.

Press “SAVE” to apply changes.

The printer will automatically restart and save the new settings.

Wait until the printer starts up completely if you wish for further operations.

## Serial Interface (Option)

### Specifications

| | |
|---|---|
| Transfer system | Start/stop asynchronous duplex communication |
| Signal level | RS-232C |
| Baud rate | 2400, 4800, 9600, 19200, 38400, 57600, 115200 bps |
| Bit length | 7-bit, 8-bit |
| Stop bit | 1-bit, 2-bit |
| Parity | Odd, even, none |
| Connector | D-SUB 25PIN |

### Signal line and pin arrangement

| Pin No. | Signal code | Signal name | Function |
|---|---|---|---|
| 1 | FG | Protective grounding | Protective grounding |
| 2 | TXD | Transmitted data | Signal line that transmits data from the printer to other devices |
| 3 | RXD | Received data | Signal line that transmits data from other devices to the printer |
| 4 | RTS | Transmission request | Signal line that becomes active when the printer can receive data |
| 5 | CTS | Able to transfer data | Signal line that becomes active when other devices can receive data from the printer |
| 6 | DSR | Data set relay | Signal line used by external devices to notify printer that they are ready to communicate |
| 7 | SGND | Signal line ground | Shows the ground level of the signal line |
| 8-13 | NC | - | Not used |
| 14 | VCC | +3.3 V | (FACTORY USE ONLY) |
| 15-19 | NC | - | Not used |
| 20 | DTR | Data terminal relay | Signal line used by printer to notify external devices that printer is ready to communicate |
| 21-25 | NC | - | Not used |

## Dip switch

Communication conditions settings can be changed by using the dip switch available on the interface board.

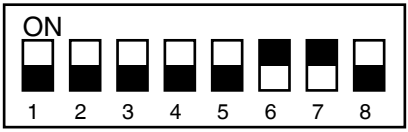


DIP switch

Respective functions of the switches are as follows.

| Switch No. | Function | ON | OFF (Factory setting) |
|---|---|---|---|
| 1 | Selection of communication conditions setting | According to setting of dip switch | According to setting in printer unit |
| 2 | Handshake | XON / XOFF | DTR / DSR |
| 3 | Bit length | 7-bit | 8-bit |
| 4 | Parity check | Yes | No |
| 5 | Parity selection | Even | Odd |
| 6 | Selection of baud rate | See below | |
| 7 | | | |
| 8 | Reservation | - | - |

### Baud rate selection

| Switch No. | | Baud rate (bps) |
|---|---|---|
| 6 | 7 | |
| OFF | OFF | 2400 |
| ON | OFF | 4800 |
| OFF | ON | 9600 |
| ON | ON | 19200 (factory setting) |

## XON/XOFF Protocol

a. Requirements to output X-ON code

- Communication is possible when the power is on.
- When the receive buffer has less than 128 bytes available, XOFF code is output, then the receive buffer has at least 1024 bytes available.

b. Requirements to output the X-OFF code

- When the receive buffer has less than 128 bytes available

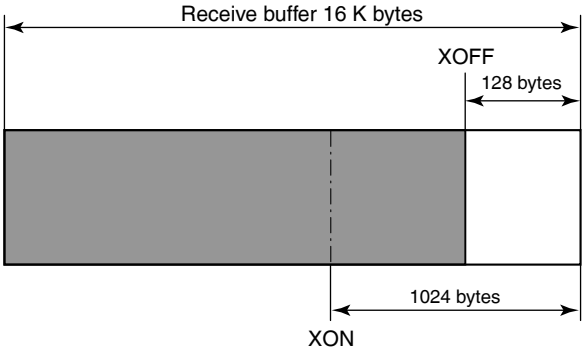


### DTR Protocol

a. Conditions when the DTR signal is “Ready (High)”

All the following conditions are satisfied.

- The receive buffer is 128 bytes or more available capacity.

  * When the receive buffer has less than 128 bytes available and the DTR signal has changed to BUSY (Low) status, BUSY status is maintained until the capacity of the receive buffer has reached 1024 bytes or more.

b. Conditions when DTR signal is “Busy (Low)”

- When the receive buffer has fallen to less than 128 bytes available.

## Parallel Interface (Option)

### Specifications

| | |
|---|---|
| Transfer system | 8-bit parallel data |
| Receive buffer size | 16 kB |
| Transmission modes | **Compatible mode:**<br>It is an asynchronous forward direction of the byte width (from host to printer) channel, and the interface line of the data is operated in accordance with signal line definitions of Centronics.<br>**NIBBLE mode:**<br>Nibble mode is asynchronous reverse channel communication with data transmission controlled by the host computer. In reverse channel transmission, the data is nibble transmitted in two parts using four status lines (Fault, Select, PE, and Busy). And nibble mode can be used along with compatible mode to send data in two directions.<br>**ECP mode:**<br>ECP mode permits bi-directional asynchronous data transmission, and thanks to its interlock handshake, it does not require the timing necessary with compatible mode. |
| Signal level | IEEE1284 standard |

## Signal line and pin assignment table

| Pin No. | Signal name | I/O | Function |
|---|---|---|---|
| 1 | *STROBE | Input | Strobe signal to read in 8-bit data |
| 2-9 | DATA1-8 | Input | 8-bit parallel signal |
| 10 | *ACKNLG | Output | 8-bit data request signal |
| 11 | BUSY | Output | Signal specifying printer busy |
| 12 | PERROR | Output | Signal specifying media out |
| 13 | SELECT | Output | Signal specifying if the printer is on-line (printing enabled) or off-line (pausing) |
| 14 | AUTOFD | Input | Invalid (ignored) |
| 15 | NC | - | Not used |
| 16 | GND | - | Signal ground |
| 17 | FGND | - | Frame ground |
| 18 | P.L.H | Output | Peripheral logic high (pull up to +5 V at 1.2 kΩ) |
| 19-30 | GND | - | Ground for twisted pair return |
| 31 | *INIT | Input | Printer reset |
| 32 | *FAULT | Output | Signal specifying printer error |
| 33-35 | NC | - | Not used |
| 36 | SELECTIN | Input | Invalid (ignored) |

## Parallel port status signals when an error occurs

The status of a signal line will not be changed in bi-directional mode such as nibble or ECP mode.

| Error | Change in the status of a signal line in compatible mode |
|---|---|
| Paper end | Busy : L → H<br>PError : L → H<br>Select : H → L<br>nFault : H → L |
| Error other than paper end<br>● Head open<br>● Other | Busy : L → H<br>PError : L →unchanged<br>Select : H → L<br>nFault : H → L |
| Conditions for Busy | ● Receive buffer full<br>● Data being read<br>● Error |

## Compatible timing specification

**[When power is on] (Time it goes off-line)**

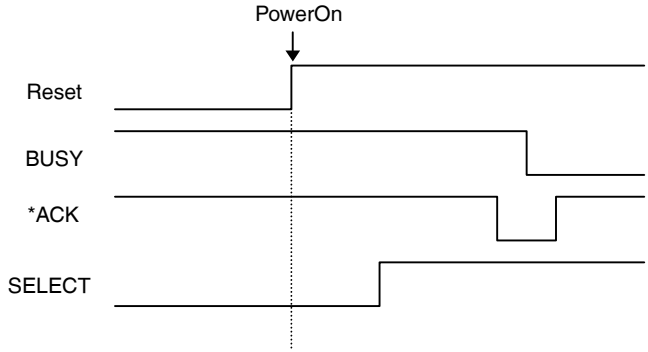


**[While receiving data]**

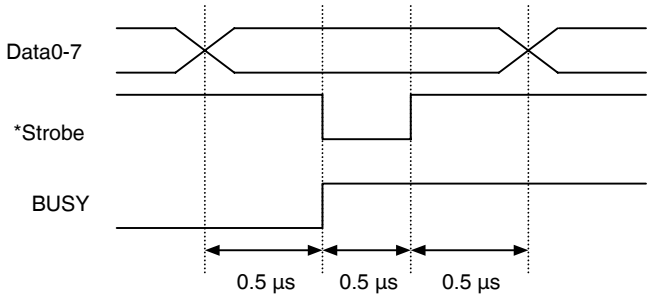


* Busy rises when *Strobe signal starts, and data is latched with *Strobe signal starts.

**[While receiving INIT signal]**

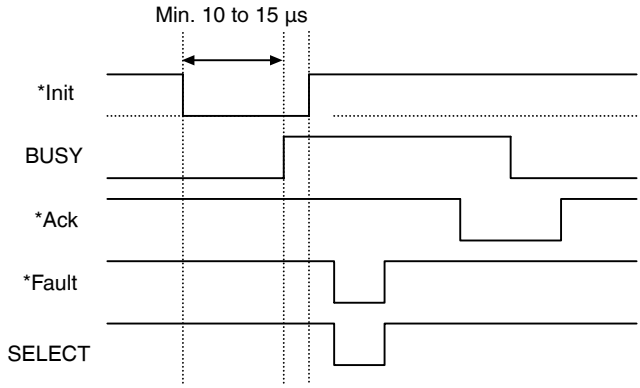

* If the *Init signal does not have width of 10 to 15µsec or more, it cannot act as an Init signal. If it is lower, the *Init signal is ignored. BUSY starts up when the *Init signal is perceived.

**Relation of the timing of the BUSY signal and the *ACK signal**

**[Center – ACK]**

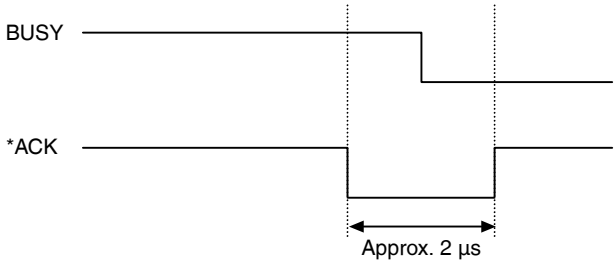


**Middle-range optional wired LAN/wireless LAN interface (IF1-EFXx, IF1-WFXx)**

Middle-range optional wired LAN/wireless LAN interface compatible with XML web applications.

For details on this board, refer to a separate manual.

**High-end optional wired LAN/wireless LAN interface (IF1-ESxx)**

High-end optional wired LAN/wireless LAN interface compatible with various protocols.

For details on this board, refer to a separate manual.

## Replacing the Interface Board

**Caution**

Always turn off the power to the printer before replacing the interface board. Do not pull it out with unnecessary force. This will cause an accident.

### Replacement Method

**1. Remove the screws (2 nos) that the fixing the interface cover.**

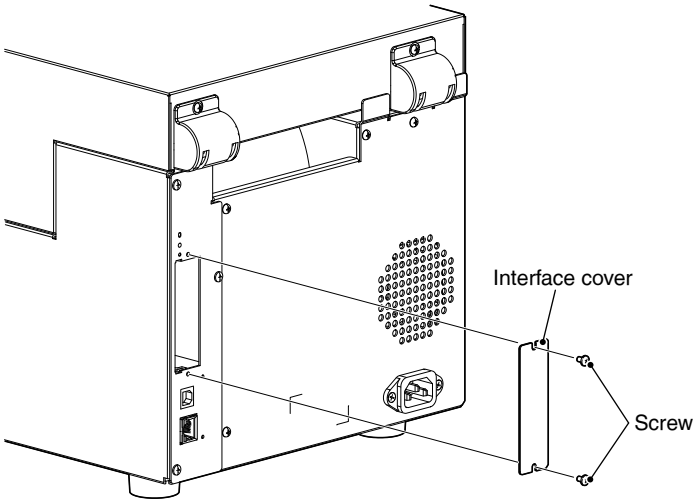

**2. Insert the interface port into the slot, and connect to the interface connector inside the printer.**

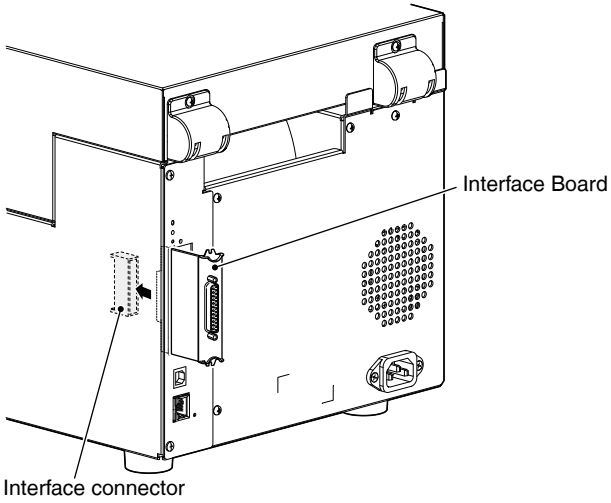


**3. Fix the interface port to the printer by using the removed screw (2 nos).**

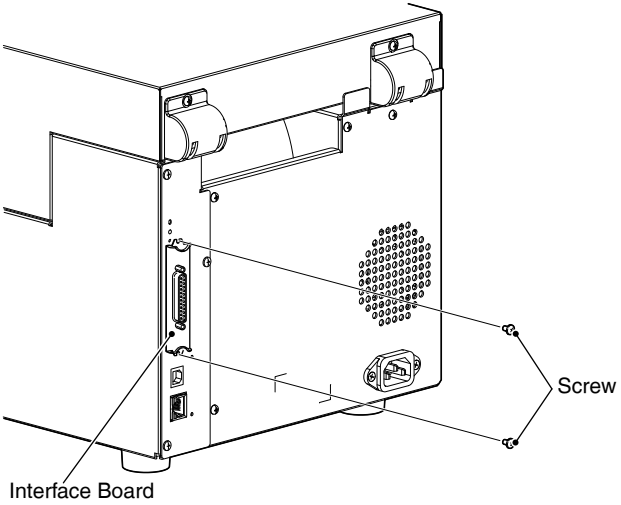

# CITIZEN SYSTEMS AMERICA CORPORATION

1411 West 190th Street, Suite 675 Gardena, CA 90248
Tel: (310) 781-1460 Fax:(310) 781-9152
http://www.citizen-systems.com

# CITIZEN SYSTEMS EUROPE GmbH

Otto-Hirsch-Brücken 17
70329 Stuttgart
Germany
Tel: +49 (0) 711 49032-0
Fax:+49 (0) 711 49032-45

Elizabeth House, 56-60 London Road
Staines-Upon-Thames, TW18 4HF
United Kingdom
Tel: +44 (0) 20 8893 1900
Fax:+44 (0) 20 8893 0080

http://www.citizen-europe.com

# CITIZEN SYSTEMS JAPAN CO., LTD.

6-1-12, Tanashi-cho, Nishi-Tokyo-shi Tokyo, 188-8511. Japan
Tel: +81 (0) 42 468 4608 Fax:+81 (0) 42 468 4687
https://www.citizen-systems.co.jp/printer/



CL-S70X III_UM_100_EN_EMEA
PMC-2309
September 2023