ZT200 Series

Industrial Printer

User Guide

ZEBRA

P1048261-07EN Rev A

Copyright

ZEBRA and the stylized Zebra head are trademarks of Zebra Technologies Corporation, registered in many jurisdictions worldwide. All other trademarks are the property of their respective owners. ©2022 Zebra Technologies Corporation and/or its affiliates. All rights reserved.

Information in this document is subject to change without notice. The software described in this document is furnished under a license agreement or nondisclosure agreement. The software may be used or copied only in accordance with the terms of those agreements.

For further information regarding legal and proprietary statements, please go to:

SOFTWARE: zebra.com/linkoslegal.
COPYRIGHTS: zebra.com/copyright.
WARRANTY: zebra.com/warranty.
END USER LICENSE AGREEMENT: zebra.com/eula.

Terms of Use

Proprietary Statement

This manual contains proprietary information of Zebra Technologies Corporation and its subsidiaries (“Zebra Technologies”). It is intended solely for the information and use of parties operating and maintaining the equipment described herein. Such proprietary information may not be used, reproduced, or disclosed to any other parties for any other purpose without the express, written permission of Zebra Technologies.

Product Improvements

Continuous improvement of products is a policy of Zebra Technologies. All specifications and designs are subject to change without notice.

Liability Disclaimer

Zebra Technologies takes steps to ensure that its published Engineering specifications and manuals are correct; however, errors do occur. Zebra Technologies reserves the right to correct any such errors and disclaims liability resulting therefrom.

Limitation of Liability

In no event shall Zebra Technologies or anyone else involved in the creation, production, or delivery of the accompanying product (including hardware and software) be liable for any damages whatsoever (including, without limitation, consequential damages including loss of business profits, business interruption, or loss of business information) arising out of the use of, the results of use of, or inability to use such product, even if Zebra Technologies has been advised of the possibility of such damages. Some jurisdictions do not allow the exclusion or limitation of incidental or consequential damages, so the above limitation or exclusion may not apply to you.

Contents

About this Guide **6**
Notational Conventions 6
Icon Conventions 6

Introduction **8**
Printer Components 8
Control Panel 9
ZT230 Printer Control Panel 10
ZT220 Printer Control Panel 12
ZT210 Printer Control Panel 13
Navigating through Screens in the ZT230 Printer Display 14
Idle Display, Home Menu, and User Menus 15
Media Types 17
Ribbon Overview 19
When to Use Ribbon 19
Coated Side of Ribbon 19

Printer Setup and Operation **22**
Handling the Printer 22
Unpacking and Inspecting the Printer 22
Storing the Printer 22
Shipping the Printer 22
Selecting a Location for the Printer 23
Selecting a Print Mode 23
Loading the Ribbon 25

Loading the Media 29
Final Steps for Tear-Off Mode 37
Final Steps for Peel-Off Mode (with or without Liner Take-Up) 39
Final Steps for Cutter Mode 44
Connecting the Printer to a Device 46
Connecting to a Phone or Tablet 46
Installing Drivers and Connecting to a Windows-Based Computer 47
Adding a Printer through Zebra Setup Utilities 63
Printing a Test Label and Making Adjustments 72
Installing Label Design Software 76
ZebraDesigner System Requirements 76

Printer Configuration and Adjustment 78
Changing Printer Settings 78
Changing Printer Settings through the Windows Driver 78
Changing Printer Settings through the User Menus 79
Calibrating the Ribbon and Media Sensors 111
Performing Auto Calibration 111
Performing Manual Sensor Calibration 112
Adjusting the Printhead Pressure 117
Adjusting Ribbon Tension 119
Removing Used Ribbon 120

Routine Maintenance 122
Cleaning Schedule and Procedures 122
Cleaning the Exterior, the Media Compartment, and the Sensors 123
Cleaning the Printhead and Platen Roller 124
Cleaning the Peel Assembly 128
Cleaning and Lubricating the Cutter Module 132
Replacing Printer Components 136
Ordering Replacement Parts 137
Recycling Printer Components 137
Lubrication 137

Troubleshooting.....138
Meaning of Indicator Lights.....138
Printing Issues.....140
Ribbon Problems.....143
Error Messages.....144
QuickHelp Pages.....144
Error Message Lookup.....144
Communications Problems.....148
Miscellaneous Issues.....149
Printer Diagnostics.....151
Power-On Self Test.....151
CANCEL Self Test.....151
PAUSE Self Test.....152
FEED Self Test.....153
FEED and PAUSE Self Test.....156
CANCEL and PAUSE Self Test.....156
Communication Diagnostics Test.....157
Sensor Profile.....158

Specifications.....160
General Specifications.....160
Power Cord Specifications.....160
Communication Interface Specifications.....162
Standard.....162
Optional.....162
Printing Specifications.....164
Ribbon Specifications.....164
Media Specifications.....165

About this Guide

This document is intended for use by any person who needs to perform routine maintenance, upgrade, or troubleshoot problems with the printer.

Notational Conventions

The following conventions are used in this document:

- **Bold** text is used to highlight the following:
  - Dialog box, window, and screen names
  - Drop-down list and list box names
  - Checkbox and radio button names
  - Icons on a screen
  - Key names on a keypad
  - Button names on a screen
- Bullets (•) indicate:
  - Action items
  - List of alternatives
  - Lists of required steps that are not necessarily sequential.
- Sequential lists (for example, those that describe step-by-step procedures) appear as numbered lists.

Icon Conventions

The documentation set is designed to give the reader more visual clues. The following graphic icons are used throughout the documentation set. These icons and their associated meanings are described below.

NOTE: The text here indicates information that is supplemental for the user to know and that is not required to complete a task.

IMPORTANT: The text here indicates information that is important for the user to know.

CAUTION—EYE INURY: Wear protective eyewear when performing certain tasks.

CAUTION—PRODUCT DAMAGE: If the precaution is not taken, the product could be damaged.

CAUTION: If the precaution is not heeded, the user could receive a minor or moderate injury.

[OTHER]: Touching this area could result in burns.

CAUTION—ESD: Observe proper electrostatic safety precautions.

CAUTION—ELECTRIC SHOCK: Disconnect the printer power before performing certain procedures to avoid the risk of electric shock.

WARNING: If danger is not avoided, the user CAN be seriously injured or killed.

DANGER: If danger is not avoided, the user WILL be seriously injured or killed.

NOTE: This is an icon for wired networking notes.

Introduction

This section provides a high-level overview of the printer and its components.

Printer Components

The components inside your printer are color-coded.

- The touch points that you will need to handle are colored gold inside the printers and are highlighted in gold in the illustrations in this manual.
- The components associated with the ribbon system are made of black plastic, while the components associated with media are made of gray plastic. Those components and others are highlighted in light blue in the illustrations in this manual as needed.

There are various components inside the media compartment of your printer. Depending on the printer model and the installed options, your printer may look slightly different. The labeled components are mentioned in procedures throughout this manual.

Figure 1 Printer Components

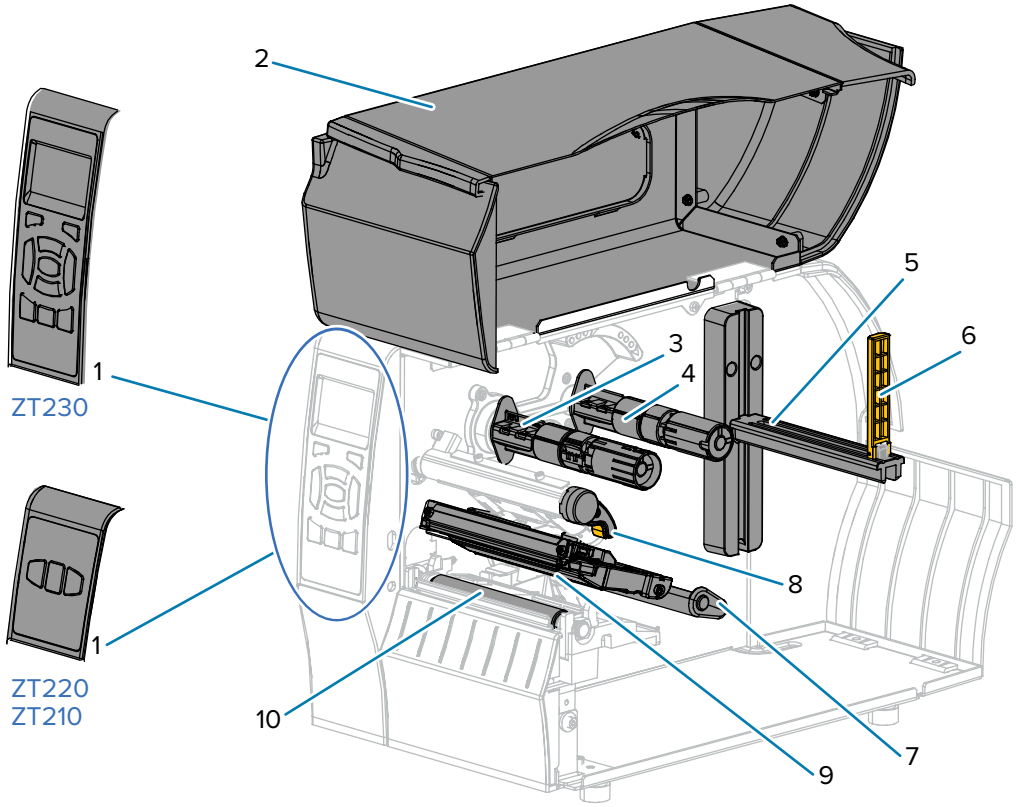

1	Control panel
2	Media door
3	Ribbon take-up spindle*
4	Ribbon supply spindle*
5	Media supply hanger
6	Media supply guide
7	Media dancer assembly
8	Printhead-open lever
9	Printhead assembly
10	Platen roller

* This component appears only in printers that have the Thermal Transfer option installed.

Control Panel

The control panel indicates the printer's current status and allows the user to control basic printer operation.

ZT230 Printer Control Panel

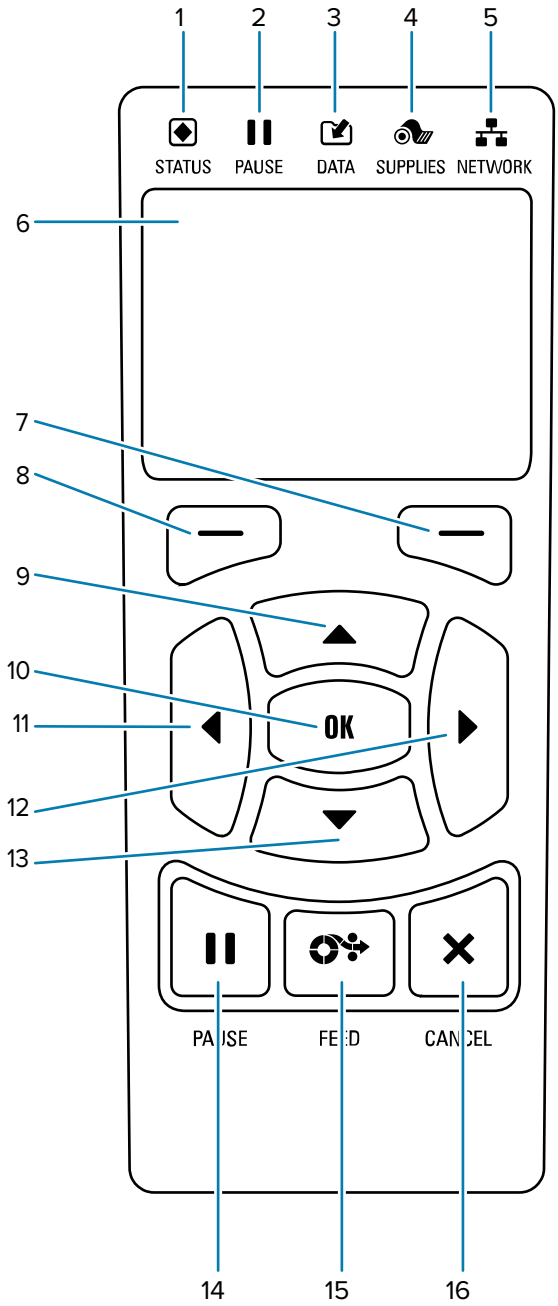

1	**STATUS** light	These indicator lights show the current status of the printer. For more information, see Table 11 Status of Printer As Shown by Indicator Lights on page 138.
2	**PAUSE** light	

3	**DATA** light	
4	**SUPPLIES** light	
5	**NETWORK** light	
6	The display shows the printer's current status and allows the user to navigate the menu system.	
7	**RIGHT SELECT** button	These buttons execute the commands shown directly above them in the display.
8	**LEFT SELECT** button	
9	The **UP ARROW** button changes the parameter values. Common uses are to increase a value or to scroll through choices.	
10	The **OK** button selects or confirms what is shown on the display.	
11	The **LEFT ARROW** button, which is active only in the menu system, navigates to the left.	
12	The **RIGHT ARROW** button, which is active only in the menu system, navigates to the right.	
13	The **DOWN ARROW** button changes the parameter values. Common uses are to decrease a value or to scroll through choices.	
14	The **PAUSE** button starts or stops printer operation when pressed.	
15	The **FEED** button forces the printer to feed one blank label each time the button is pressed.	
16	The **CANCEL** button cancels label formats when the printer is paused. • Press once to cancel the next label format. • Press and hold for 2 seconds to cancel all label formats.	

ZT220 Printer Control Panel

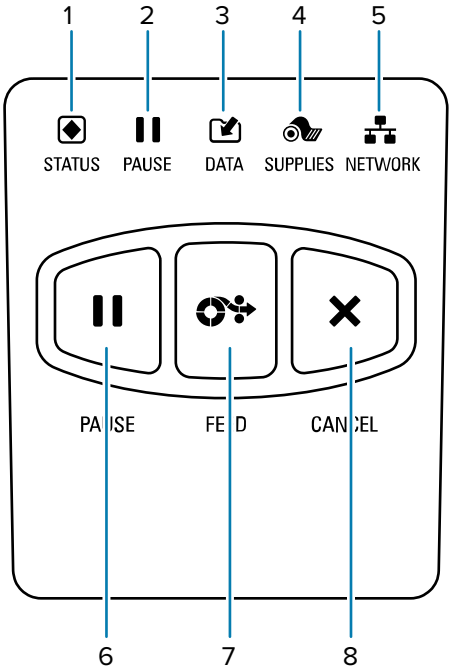

1	**STATUS** light	These indicator lights show the current status of the printer. For more information, see Table 11 Status of Printer As Shown by Indicator Lights on page 138.
2	**PAUSE** light	
3	**DATA** light	
4	**SUPPLIES** light	
5	**NETWORK** light	
6	The **PAUSE** button starts or stops printer operation when pressed.	
7	The **FEED** button forces the printer to feed one blank label each time the button is pressed.	
8	The **CANCEL** button cancels label formats when the printer is paused. • Press once to cancel the next label format. • Press and hold for 2 seconds to cancel all label formats.	

ZT210 Printer Control Panel

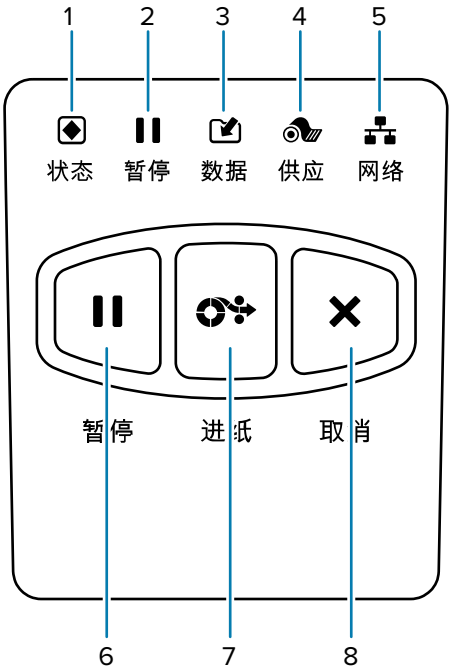

1	**STATUS** light	These indicator lights show the current status of the printer. For more information, see Table 11 Status of Printer As Shown by Indicator Lights on page 138.
2	**PAUSE** light	
3	**DATA** light	
4	**SUPPLIES** light	
5	**NETWORK** light	
6	The **PAUSE** button starts or stops printer operation when pressed.	
7	The **FEED** button forces the printer to feed one blank label each time the button is pressed.	
8	The **CANCEL** button cancels label formats when the printer is paused. • Press once to cancel the next label format. • Press and hold for 2 seconds to cancel all label formats.	

Navigating through Screens in the ZT230 Printer Display

The following topics detail:

- the options available for navigating through the screens in the ZT230 printer control panel display
- how to select or modify things shown on the display

Idle Display

- At the Idle Display (Figure 2 Idle Display on page 16), press **LEFT SELECT** to go to the printer's **Home** menu (Figure 3 Home Menu on page 16).

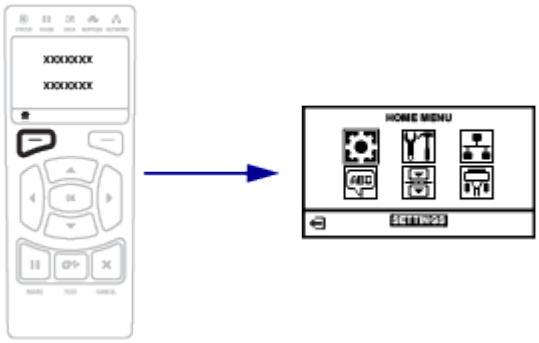

Home Menu

- This section describes how to navigate the Home menu.

To move from icon to icon in the Home menu, press any of the **ARROW** buttons. When an icon is selected, its colors are reversed to highlight it. SETTINGS menu icon SETTINGS menu icon highlighted	To select the highlighted menu icon and enter the menu, press **OK**.	Press **LEFT SELECT** to exit the Home menu and return to the Idle Display. The printer automatically returns to the Idle Display after 15 seconds of inactivity in the Home menu.

⚙		

User Menus

- This section describes how to navigate the User menus.

 Press **LEFT SELECT** to return to the Home menu. The printer automatically returns to the Home menu after 15 seconds of inactivity in a user menu.	 ▼ and ▲ indicate that a value can be changed. Any changes that you make are saved immediately. Press the **UP ARROW** or **DOWN ARROW** to scroll through accepted values.
 To scroll through the items in a user menu, press the **LEFT ARROW** or **RIGHT ARROW**.	 A word in the bottom-right corner of the display indicates an available action. Press **OK** or press **RIGHT SELECT** to perform the action shown.

Idle Display, Home Menu, and User Menus

The ZT230 printer's control panel includes a display, where you can view the printer's status or change its operating parameters. In this section, you will learn how to navigate through the printer's menu system and change values for menu items.

After the printer completes the power-up sequence, it moves to the Idle Display. If a print server is installed, the printer cycles through its IP address and information configured by the user.

Figure 2 Idle Display

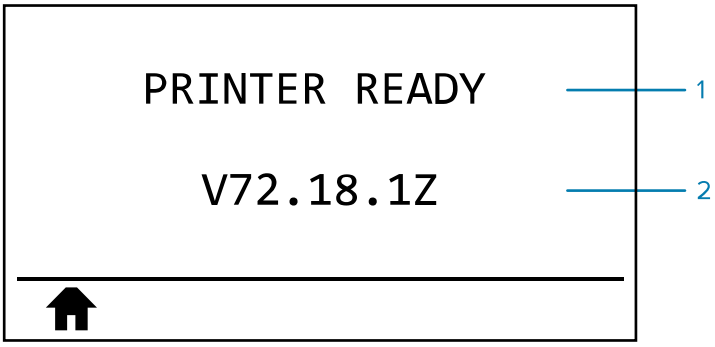

1	The printer's current status
2	Information that you set through Idle Display
	Home menu shortcut

Home Menu

Use the Home menu to access the printer's operating parameters through the six user menus (User Menus).

Figure 3 Home Menu

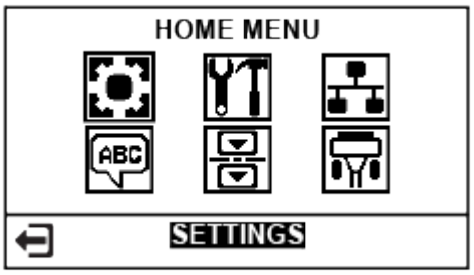

	Exit and return to the Idle Display.

Changing Printer Settings through the User Menus

The following are the user menus and the items that appear in each.

SETTINGS

- DARKNESS
- PRINT SPEED
- MEDIA TYPE
- PRINT METHOD
- TEAR OFF
- PRINT WIDTH
- PRINT MODE
- LEFT POSITION
- REPRINT MODE
- LABEL LENGTH MAX
- LANGUAGE
- TOOLS MENU*

TOOLS

- PRINT INFORMATION
- LCD CONTRAST
- IDLE DISPLAY
- POWER UP ACTION
- HEAD CLOSE ACTION
- LOAD DEFAULTS
- MEDIA/RIBBON CAL
- DIAGNOSTIC MODE
- ZBI ENABLED?
- RUN ZBI PROGRAM
- STOP ZBI PROGRAM
- NETWORK MENU*

NETWORK

- ACTIVE PRINT SERVER
- IP ADDRESS
- SUBNET MASK
- GATEWAY
- IP PROTOCOL
- MAC ADDRESS
- ESSID
- PRINT INFORMATION
- RESET NETWORK
- LOAD DEFAULTS
- LANGUAGE MENU*

LANGUAGE

- LANGUAGE
- COMMAND LANGUAGE
- COMMAND CHAR
- CONTROL CHAR
- DELIMITER CHAR
- ZPL MODE
- SENSORS MENU*

SENSORS

- SENSOR TYPE
- MEDIA/RIBBON CAL
- PRINT INFORMATION
- LABEL SENSOR
- TAKE LABEL
- PORTS MENU*

PORTS

- BAUD RATE
- DATA BITS
- PARITY
- HOST HANDSHAKE
- SETTINGS MENU*

* Denotes a shortcut to the next user menu.

Media Types

IMPORTANT: Zebra strongly recommends the use of Zebra-brand supplies for continuous high-quality printing. A wide range of paper, polypropylene, polyester, and vinyl stock has been specifically engineered to enhance the printing capabilities of the printer and to prevent premature printhead wear. To purchase supplies, go to www.zebra.com/howtobuy.

Your printer can use various types of media:

- Standard media—Most standard media uses an adhesive backing that sticks individual labels or a continuous length of labels to a liner. Standard media can come on rolls or in a fanfold stack.
- Tag stock—Tags are usually made from a heavy paper. Tag stock does not have adhesive or a liner, and it is typically perforated between tags. Tag stock can come on rolls or in a fanfold stack.

Table 1 Roll and Fanfold Media

Media Type	How it Looks	Description
Non-Continuous Roll Media	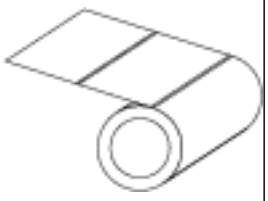	Roll media is wound on a core that can be 25 to 76 mm (1 in. to 3 in.) in diameter. Individual labels or tags are separated by one or more of the following methods: • Web media separates labels by gaps, holes, or notches. 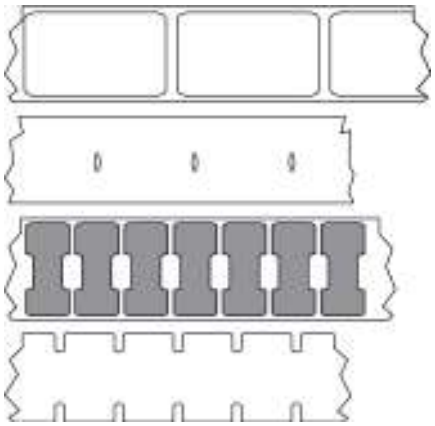 • Black mark media uses pre-printed black marks on the back side of the media to indicate label separations. • Perforated media has perforations that allow the labels or tags to be separated from each other easily. The media may also have black marks or other separations between labels or tags.
Non-Continuous Fanfold Media	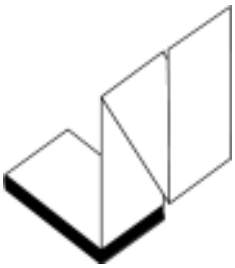	Fanfold media is folded in a zigzag pattern. Fanfold media can have the same label separations as non-continuous roll media. The separations would fall on or near the folds.

Table 1 Roll and Fanfold Media (Continued)

Media Type	How it Looks	Description
Continuous Roll Media	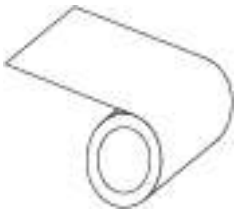	Roll media is wound on a core that can be 25 to 76 mm (1 in. to 3 in.) in diameter. Continuous roll media does not have gaps, holes, notches, or black marks to indicate label separations. This allows the image to be printed anywhere on the label. Sometimes a cutter is used to cut apart individual labels.

Ribbon Overview

Ribbon is a thin film that is coated on one side with wax, resin, or wax resin, which is transferred to the media during the thermal transfer process. The media determines whether you need to use ribbon and how wide the ribbon must be.

When ribbon is used, it must be as wide as or wider than the media being used. If the ribbon is narrower than the media, areas of the printhead are unprotected and subject to premature wear.

When to Use Ribbon

Thermal transfer media requires ribbon for printing while direct thermal media does not. To determine if ribbon must be used with a particular media, perform a media scratch test.

Scratch Test

1. Scratch the print surface of the media rapidly with your fingernail.
2. Did a black mark appear on the media?

If a black mark...	Then the media is...
Does not appear on the media	Thermal transfer. A ribbon is required.
Appears on the media	Direct thermal. No ribbon is required.

Coated Side of Ribbon

Ribbon can be wound with the coated side on the inside or outside. This printer can only use ribbon that is coated on the outside. If you are unsure which side of a particular roll of ribbon is coated, perform an adhesive test or a ribbon scratch test to determine which side is coated.

Figure 4 Ribbon Coated on Outside or Inside

Outside Inside

Adhesive Test

If you have labels available, perform the adhesive test to determine which side of a ribbon is coated. This method works well for ribbon that is already installed.

1. Peel a label from its liner.
2. Press a corner of the sticky side of the label to the outer surface of the roll of ribbon.
3. Peel the label off of the ribbon.
4. Observe the results. Did flakes or particles of ink from the ribbon adhere to the label?

If ink from the ribbon...	Then...
Adhered to the label	The ribbon is coated on the outside and can be used in this printer.
Did not adhere to the label	The ribbon is coated on the inside and cannot be used in this printer. To verify this, repeat the test on the other surface of the roll of ribbon.

Ribbon Scratch Test

Perform the ribbon scratch test when labels are unavailable.

1. Unroll a short length of ribbon.
2. Place the unrolled section of ribbon on a piece of paper with the outer surface of the ribbon in contact with the paper.
3. Scratch the inner surface of the unrolled ribbon with your fingernail.
4. Lift the ribbon from the paper.
5. Observe the results. Did the ribbon leave a mark on the paper?

If ink from the ribbon...	Then...
Left a mark on the paper	The ribbon is coated on the outside and can be used in this printer.

If ink from the ribbon...	Then...
Did not leave a mark on the paper	The ribbon is coated on the inside and cannot be used in this printer. To verify this, repeat the test on the other surface of the roll of ribbon.

Printer Setup and Operation

This section assists the technician with initial setup and operation of the printer.

Handling the Printer

This section describes how to handle your printer.

Unpacking and Inspecting the Printer

When you receive the printer, immediately unpack it and inspect for shipping damage.

- Save all packing materials
- Check all exterior surfaces for damage.
- Raise the media door, and inspect the media compartment for damage to components.

If you discover shipping damage upon inspection:

- Immediately notify the shipping company and file a damage report.
- Keep all packaging material for shipping company inspection.
- Notify your authorized Zebra reseller.

IMPORTANT: Zebra Technologies is not responsible for any damage incurred during the shipment of the equipment and will not repair this damage under warranty.

Storing the Printer

If you are not placing the printer into immediate operation, repackage it using the original packing materials. You may store the printer under the following conditions:

- Temperature: –40° to 60°C (–40°F to 140°F)
- Relative humidity: 5% to 85% non-condensing

Shipping the Printer

If you must ship the printer:

1. Turn off (O) the printer, and disconnect all cables.
2. Remove any media, ribbon, or loose objects from the printer interior.

3. Close the printhead.
4. Carefully pack the printer into the original container or a suitable alternate container to avoid damage during transit. A shipping container can be purchased from Zebra if the original packaging has been lost or destroyed.

Selecting a Location for the Printer

Select a location for the printer that meets these conditions:

- Surface: The surface where the printer will be located must be solid, level, and of sufficient size and strength to hold the printer.
- Space: The area where the printer will be located must include enough space for ventilation and for accessing the printer components and connectors. To allow for proper ventilation and cooling, leave open space on all sides of the printer.

CAUTION: Do not place any padding or cushioning material behind or under the printer because this restricts air flow and could cause the printer to overheat.

- Power: The printer should be within a short distance of an appropriate power outlet that is easily accessible.
- Data communication interfaces: The printer must be within range of your WLAN radio (if applicable) or within an acceptable range for other connectors to reach your data source (usually a computer). For more information on maximum cable lengths and configuration, see General Specifications on page 160.
- Operating conditions: Your printer is designed to function in a wide range of environmental and electrical conditions, including a warehouse or factory floor. These are the temperature and relative humidity requirements for the printer when it is operating.

Table 2 Operating Temperature and Humidity

Mode	Temperature	Relative Humidity
Thermal Transfer	5° to 40°C (41° to 104°F)	20 to 85% non-condensing
Direct Thermal	0° to 40°C (32° to 104°F)	

Selecting a Print Mode

Use a print mode that matches the media being used and the printer options available. The media path is the same for roll and fanfold media. To set the printer to an available print mode, see Print Settings on page 80.

Table 3 Print Modes and Printer Options

Print Mode	When to Use/Printer Options Required	Printer Actions
Tear-Off (default setting)	Use for most applications. This mode can be used with any printer options and most media types.	The printer prints label formats as it receives them. The printer operator can tear off the printed labels any time after they print.

Table 3 Print Modes and Printer Options (Continued)

Print Mode	When to Use/Printer Options Required	Printer Actions
	Roll media in Tear-Off mode (shown using thermal transfer media with ribbon loaded) 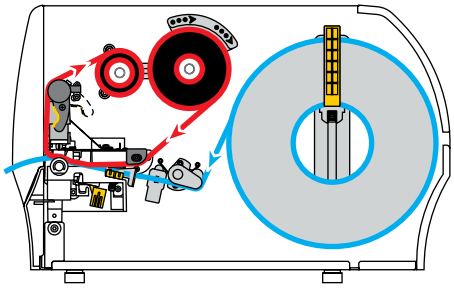 Fanfold media in Tear-Off mode (shown using direct thermal media and no ribbon) 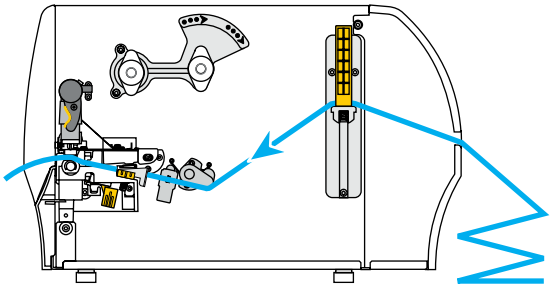	
Peel-Off	Use if the printer has the Peel#Off option or the Liner Take-Up option. The Liner Take-Up option is available only on the ZT230 printer.	The printer peels the label from the liner during printing and then pauses until the label is removed. The liner exits the front of the printer. • In Peel-Off mode, the liner exits the front of the printer. • In Peel-Off mode with Liner Take-Up, the liner winds onto the Liner Take-up spindle or the rewind spindle.

Table 3 Print Modes and Printer Options (Continued)

Print Mode	When to Use/Printer Options Required	Printer Actions
	Peel-Off mode (shown without a ribbon system) 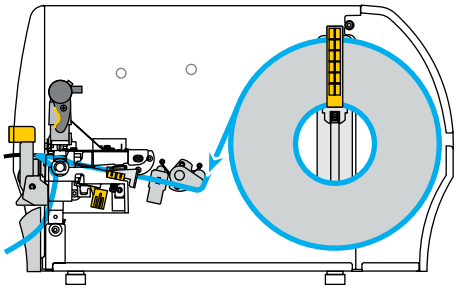 Peel-Off mode with Liner Take-Up* (shown using direct thermal media and no ribbon) 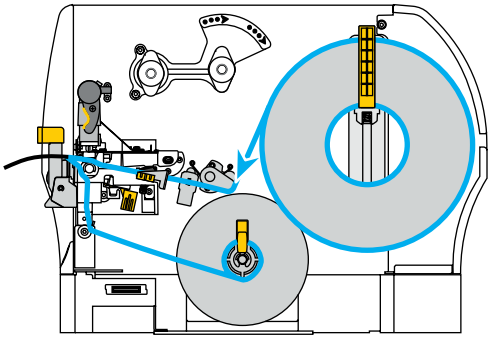	
Cutter	Use if the printer has a cutter option when you want the labels to be cut apart.	The printer prints a label and then cuts it free.
	Cutter mode (shown using direct thermal media and no ribbon) 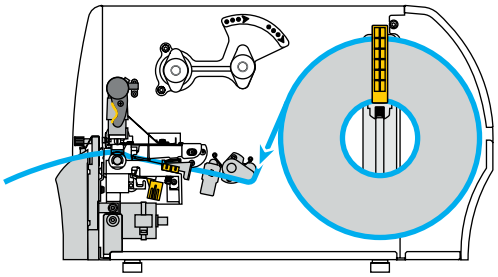	

Loading the Ribbon

NOTE: This section applies only to printers that have the Thermal Transfer option installed.

Ribbon is used only with thermal transfer labels. For direct thermal labels, do not load ribbon in the printer. To determine if ribbon must be used with a particular media, see When to Use Ribbon on page 19.

CAUTION: While performing any tasks near an open printhead, remove all rings, watches, hanging necklaces, identification badges, or other metallic objects that could touch the printhead. You are not required to turn off the printer power when working near an open printhead, but Zebra recommends it as a precaution. If you turn off the power, you will lose all temporary settings, such as label formats, and you must reload them before you resume printing.

IMPORTANT: Use ribbon that is wider than the media to protect the printhead from wear. Ribbon must be coated on the outside.

Watch the video: Loading the Ribbon.

1. Raise the media door.

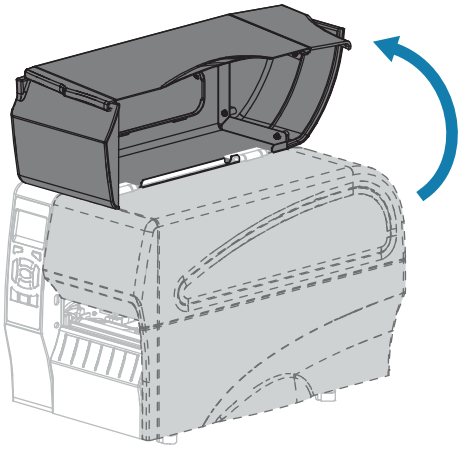

CAUTION: The printhead may be hot and could cause severe burns. Allow the printhead to cool.

2. Open the printhead assembly by rotating the printhead-open lever.

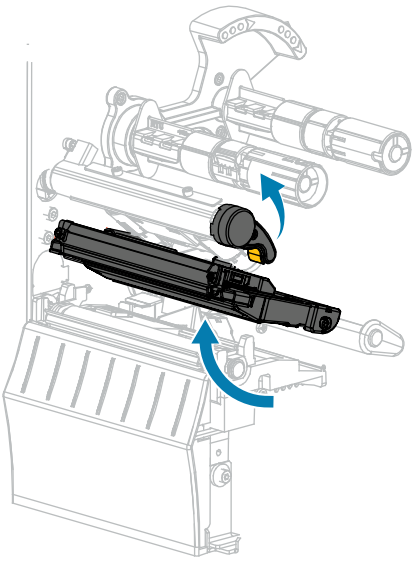

3. Place the roll of ribbon on the ribbon supply spindle with the loose end of the ribbon unrolling as shown. Push the roll back as far as it will go.

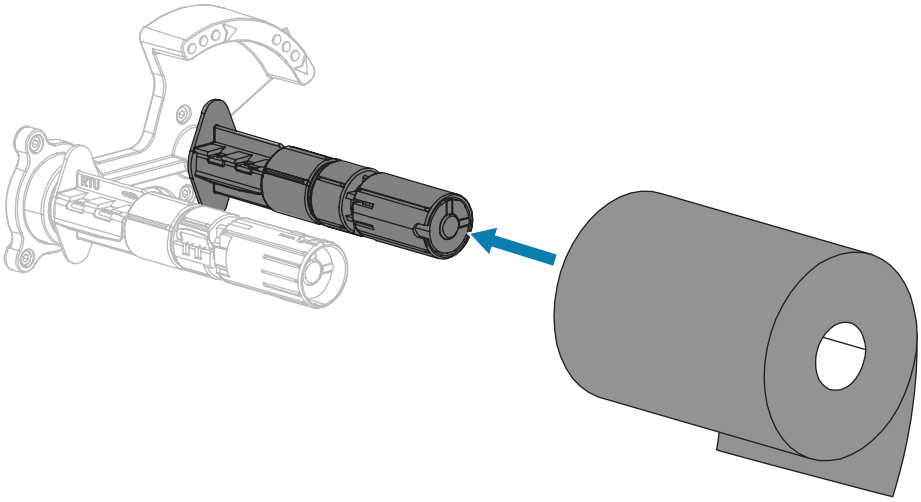

4. Your printer shipped with an empty ribbon core on the ribbon take-up spindle. If this core is no longer there, place an empty ribbon core on the ribbon take-up spindle. Push the core back as far as it will go.

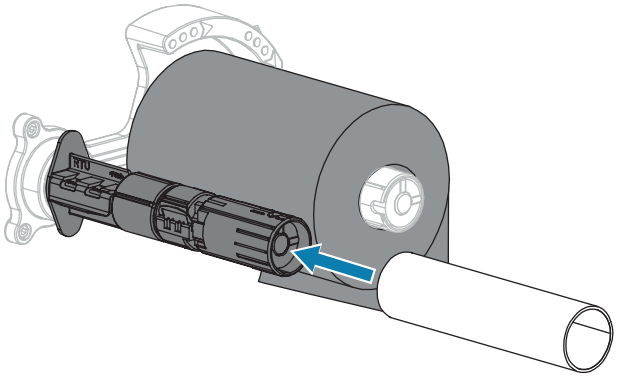

5. Bring the ribbon under the printhead assembly as shown.

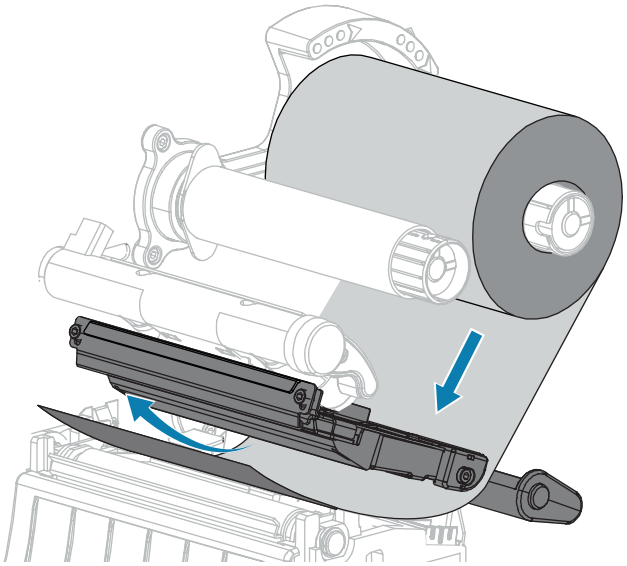

6. With the ribbon tracking as far back as it can under the printhead assembly:

a) Wrap the ribbon around the core on the ribbon take-up spindle.

b) Rotate the spindle several turns in the direction shown to tighten and align the ribbon.

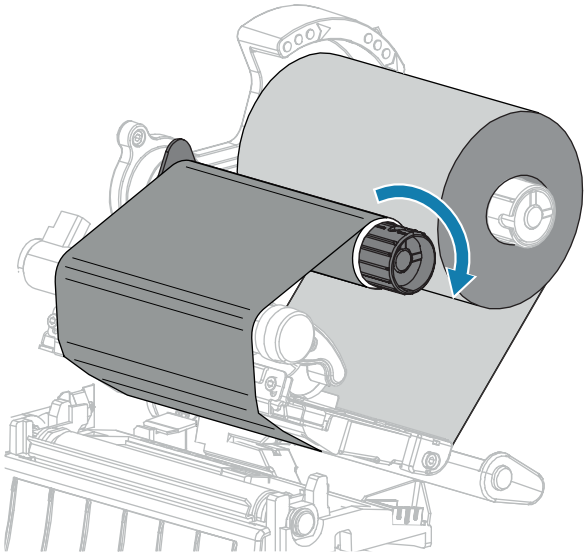

7. If media is already loaded, rotate the printhead-open lever downward until it locks the printhead in place.

   Otherwise, continue with Loading the Media on page 29.

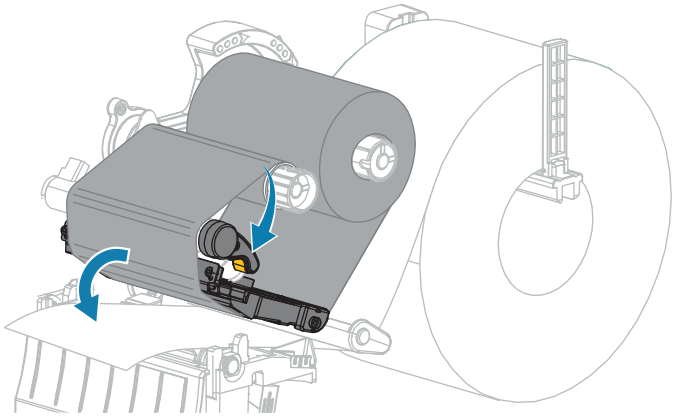

8. Close the media door.

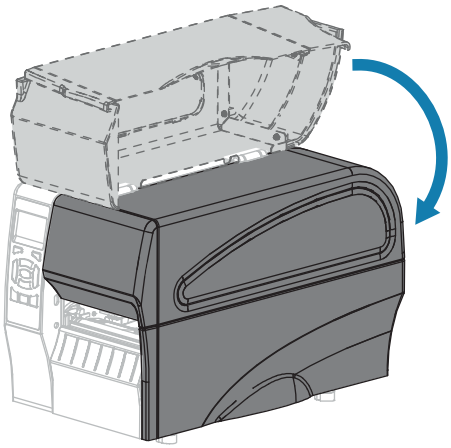

9. If necessary, press **PAUSE** to enable printing.

Loading the Media

Use the instructions in this section for loading roll or fanfold media in any print mode.

CAUTION: While performing any tasks near an open printhead, remove all rings, watches, hanging necklaces, identification badges, or other metallic objects that could touch the printhead. You are not required to turn off the printer power when working near an open printhead, but Zebra recommends it as a precaution. If you turn off the power, you will lose all temporary settings, such as label formats, and you must reload them before you resume printing.

1. Raise the media door.

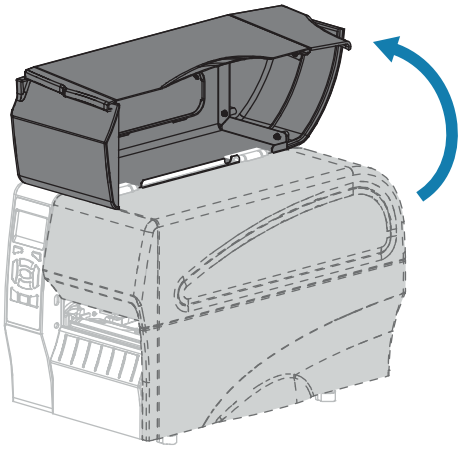

CAUTION: The printhead may be hot and could cause severe burns. Allow the printhead to cool.

2. Open the printhead assembly by rotating the printhead-open lever.

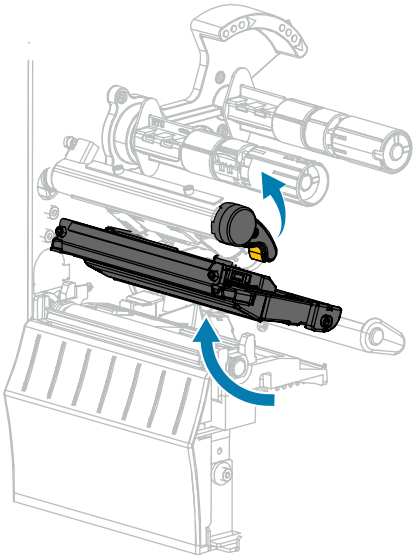

3. Insert media into the printer. Follow the instructions for roll or fanfold media, as appropriate.

Roll Media	Fanfold Media
a. Remove and discard any tags or labels that are dirty or that are held by adhesives or tape. 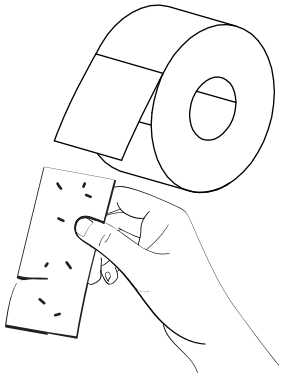 **b.** Slide out and flip down the media supply guide. 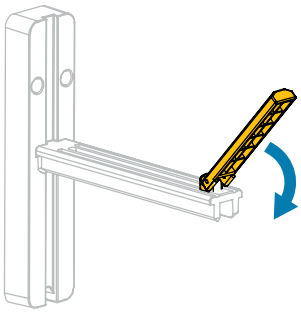 **c.** Place the roll of media on the media supply hanger. Push the roll back as far as it will go. 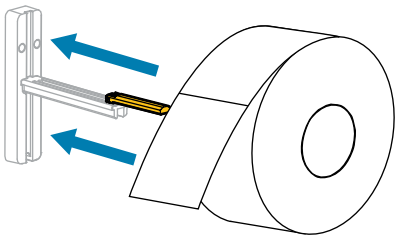	**a.** Slide out and flip down the media supply guide. 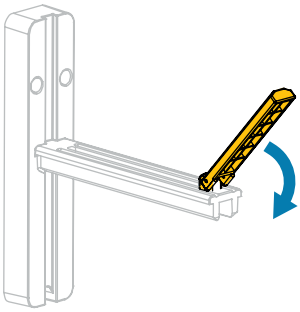 **b.** Insert the fanfold media through the rear of the printer. 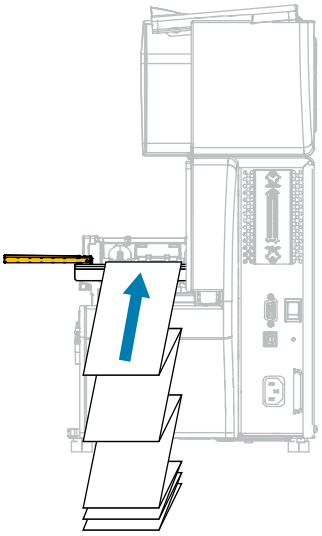 **c.** Drape the media over the media supply hanger. 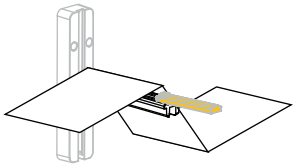

Roll Media	Fanfold Media
d. Flip up the media supply guide. 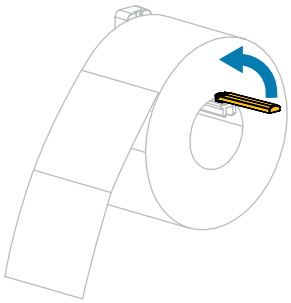 **e.** Slide in the media supply guide until it touches the edge of the roll. 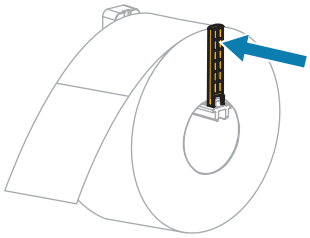	**d.** Flip up the media supply guide. 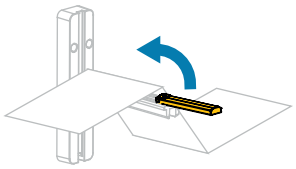 **e.** Slide in the media supply guide until it touches the edge of the media. 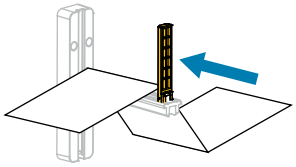 **f.** Continue with the remaining steps as shown for roll media.

4. Slide the outer media guide all the way out.

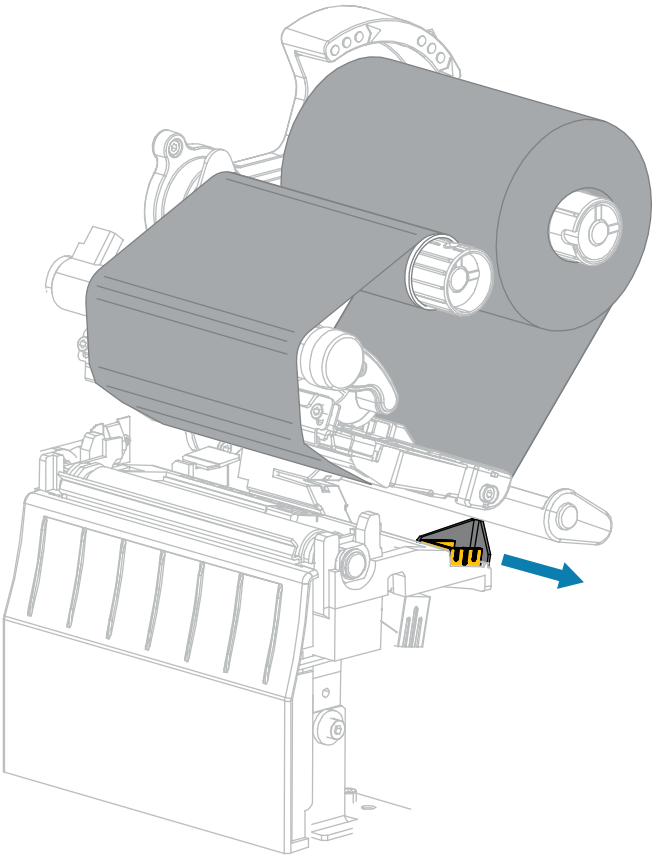

5. Slide the media under the media dancer assembly and the printhead assembly. Allow the end of the media to extend out of the front of the printer.

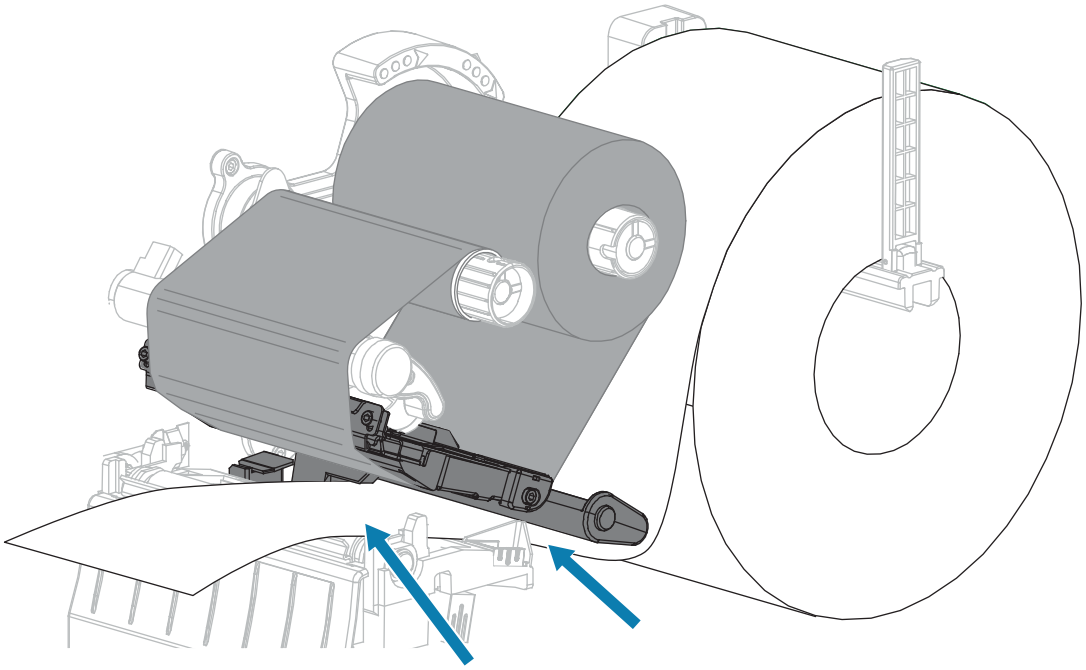

6. Make sure that the media passes through the slot in the transmissive media sensor (1) and under the inner media guide (2).

   The media should just touch the back of the transmissive media sensor slot.

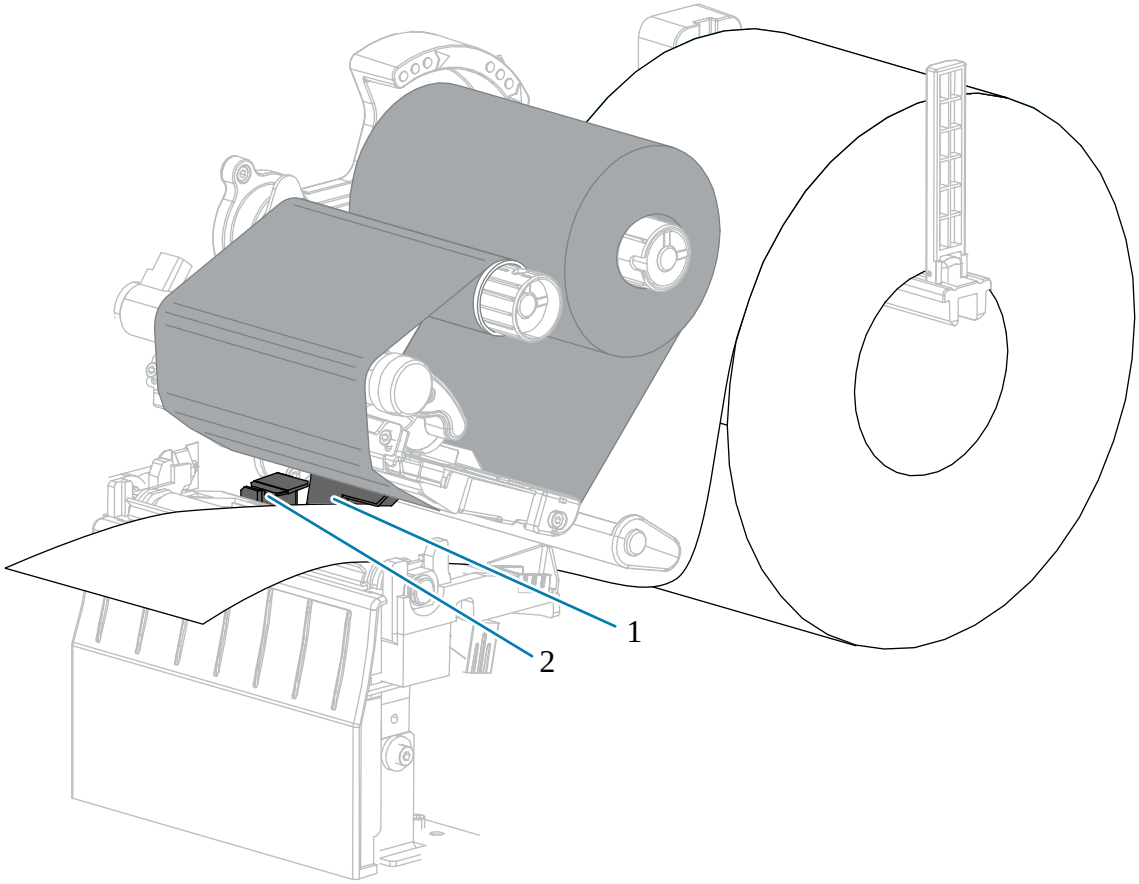

7. Determine the print mode of your printer. For more information on print modes, see Selecting a Print Mode on page 23.)

If...	Then...
Tear-Off Mode 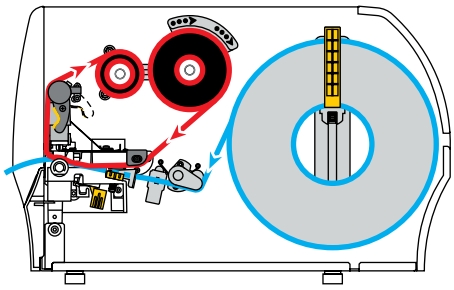	Continue with Final Steps for Tear-Off Mode on page 37.

If...	Then...
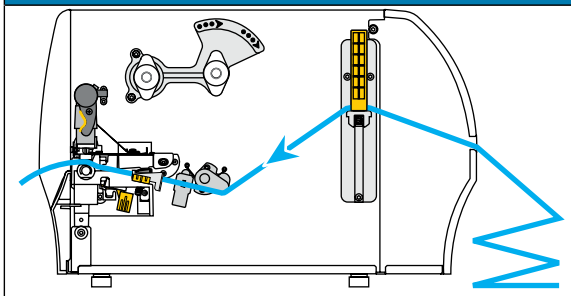	
Peel-Off mode (with or without Liner Take-Up) 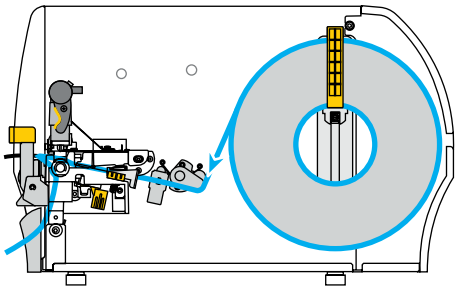 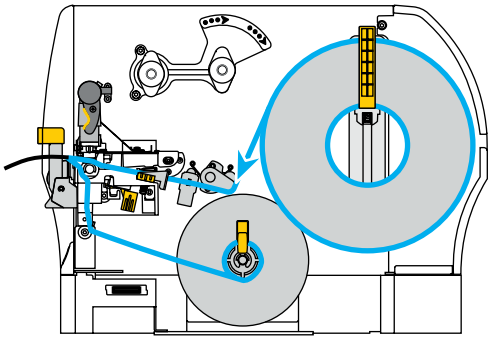	Continue with Final Steps for Peel-Off Mode (with or without Liner Take-Up) on page 39.
Cutter mode 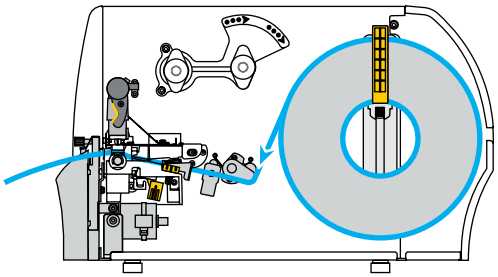	Continue with Final Steps for Cutter Mode on page 44.

Final Steps for Tear-Off Mode

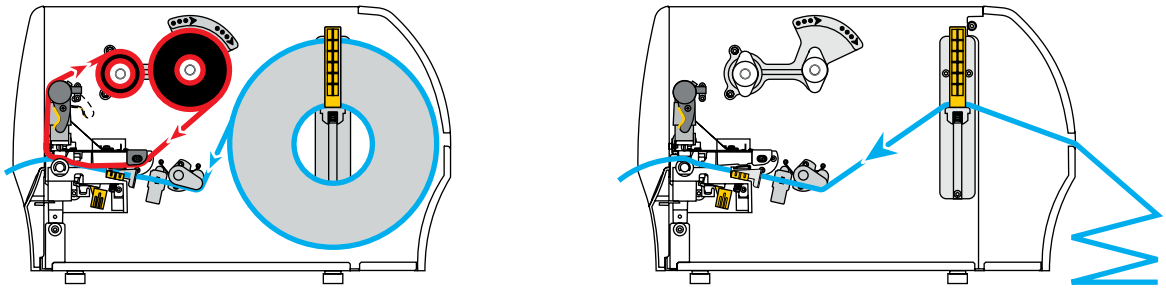

1. Slide in the outer media guide until it just touches the edge of the media.

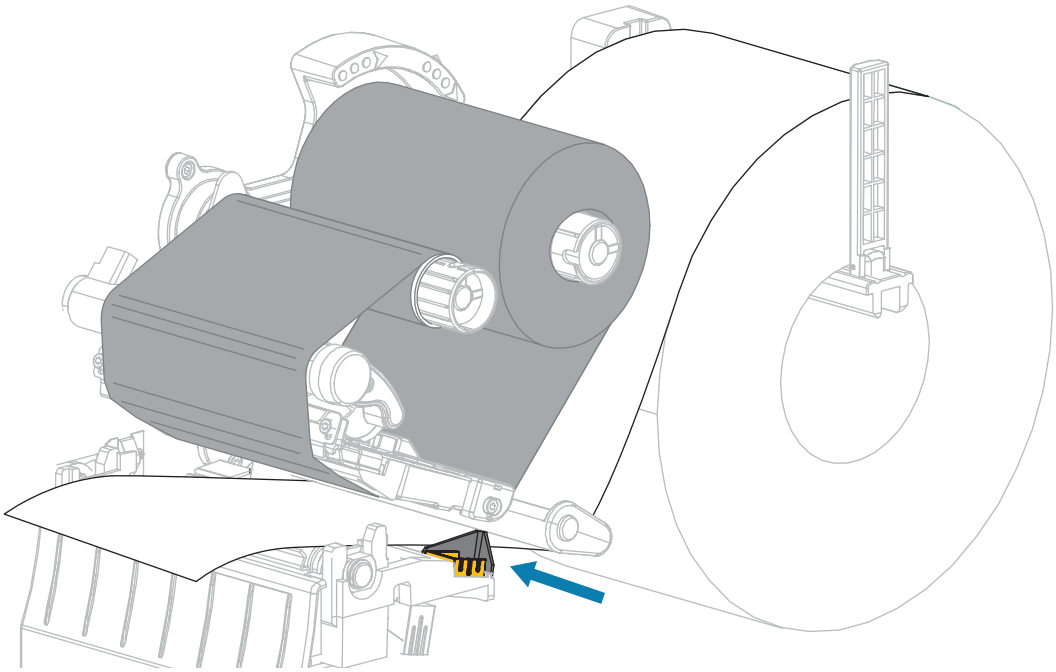

2. Rotate the printhead-open lever downward until it locks the printhead in place.

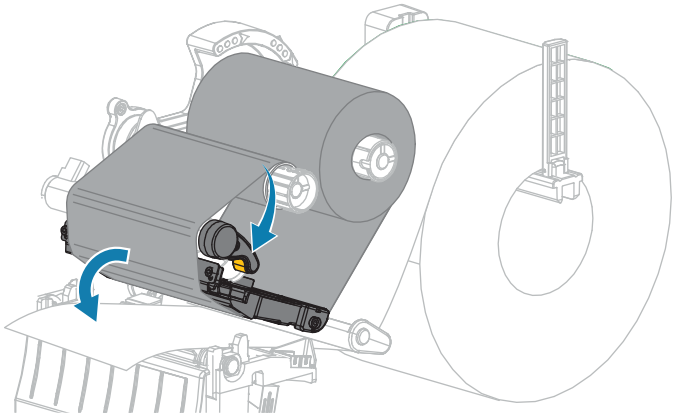

3. Set the printer to Tear-Off mode (for more information, see Print Mode).
4. Close the media door.

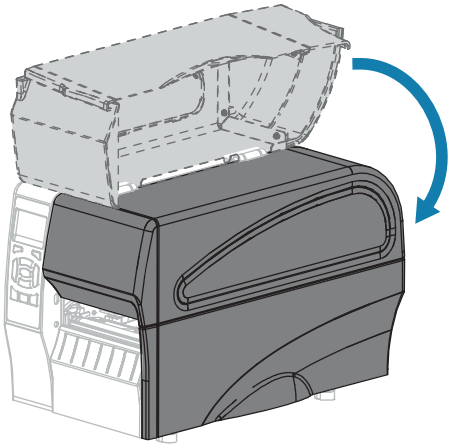

5. Press **PAUSE** to exit pause mode and enable printing.

   The printer may perform a label calibration or feed a label, depending on your settings.
6. For optimal results, calibrate the printer. See Calibrating the Ribbon and Media Sensors on page 111.
7. Verify that your printer is able to print a configuration label by holding both the **FEED** and **CANCEL** keys for 2 seconds.

   Media loading in Tear-Off mode is complete.

Final Steps for Peel-Off Mode (with or without Liner Take-Up)

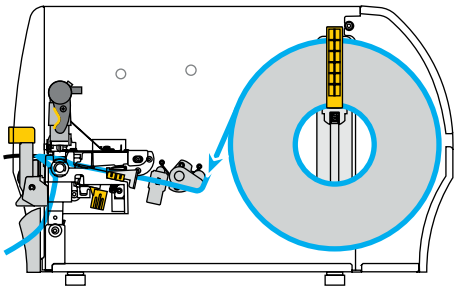

1. Push down the peel-off mechanism release lever to open the peel assembly.

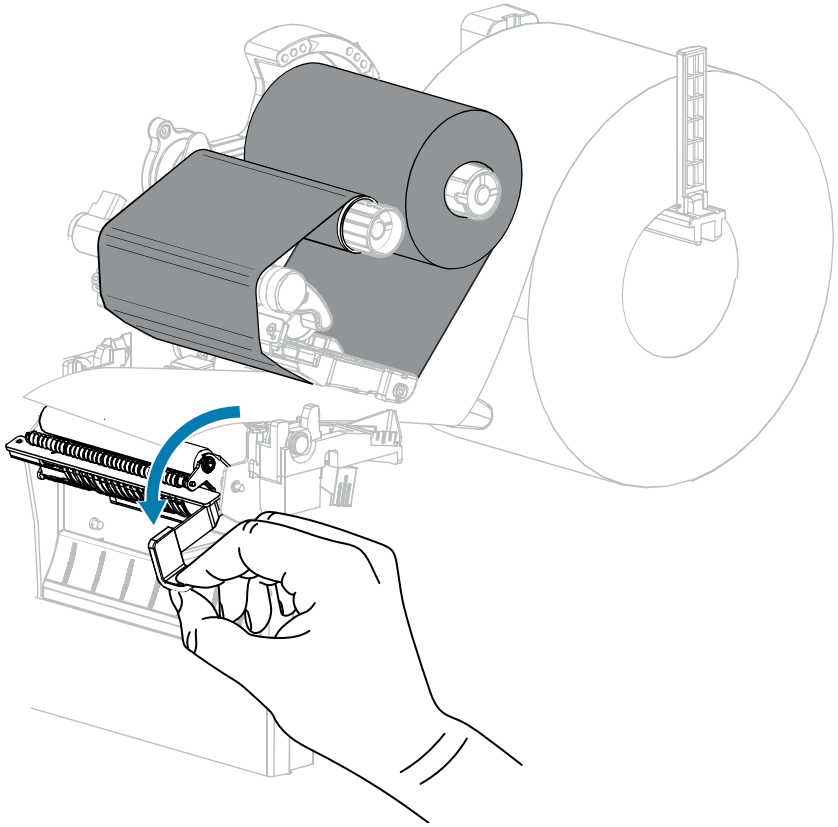

2. Extend the media approximately 18 in. (500 mm) out of the printer.

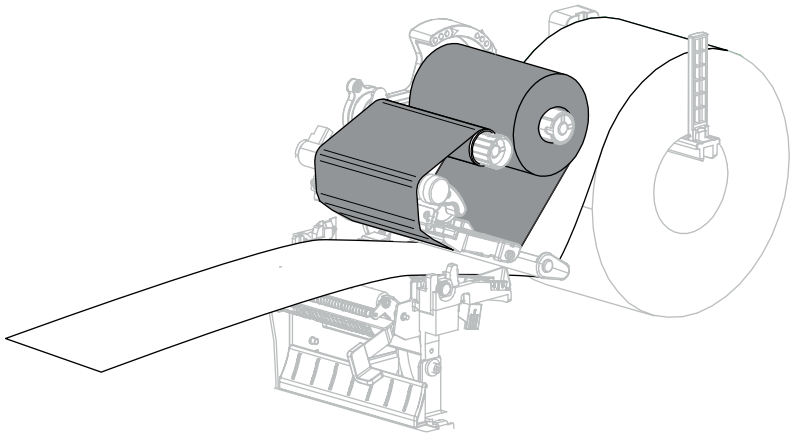

3. Remove the exposed labels so that only the liner remains.

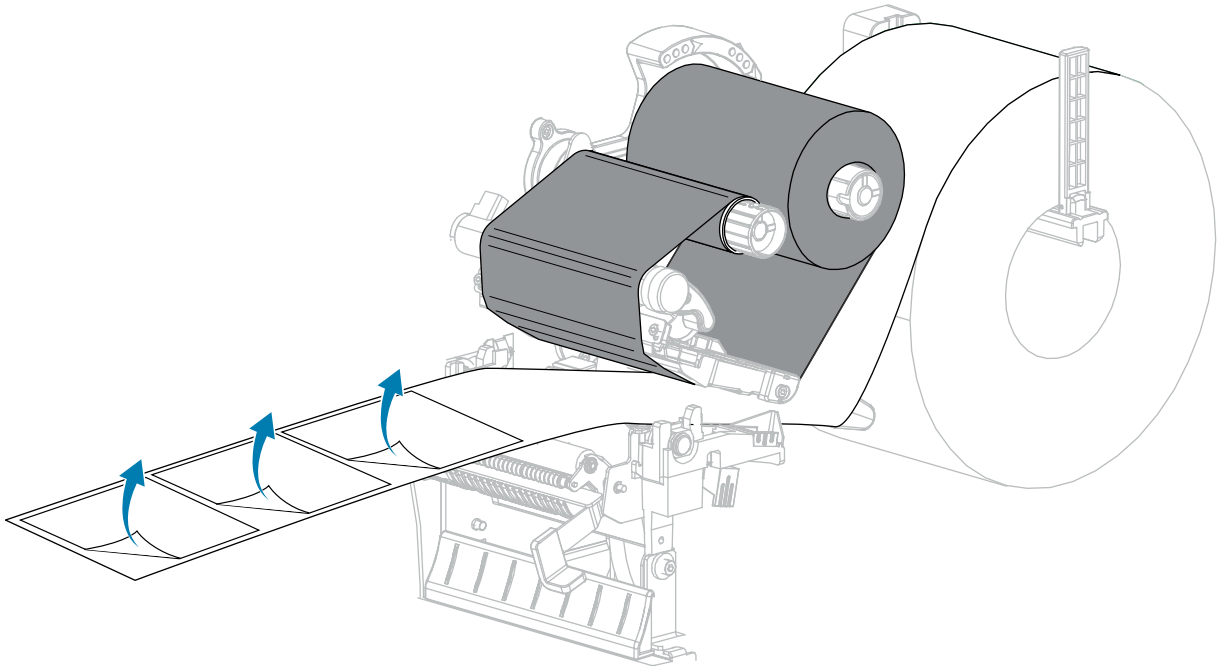

4. Feed the liner behind the peel assembly. Make sure that the end of the liner falls outside of the printer.

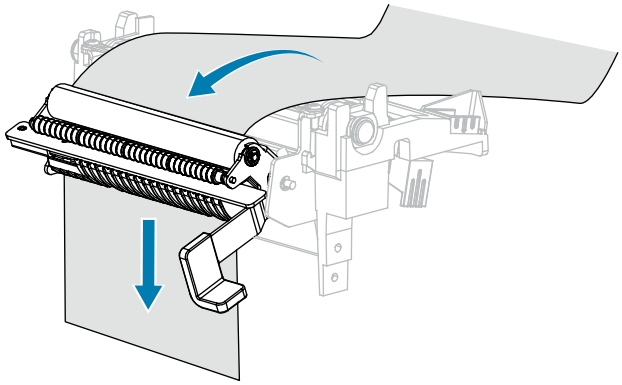

5. Complete this step only if you want to use Peel-Off mode with Liner Take-Up.

Your printer must have the Liner Take-Up option installed.

a) Slide the liner into the slot in the liner take-up spindle (1).

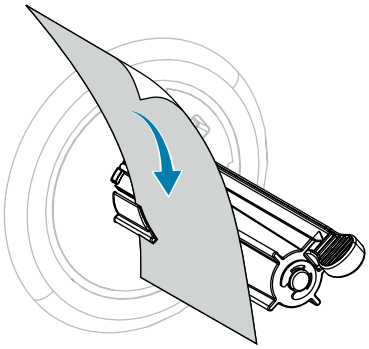

b) Push the liner back until it touches the back plate of the liner take-up spindle assembly.

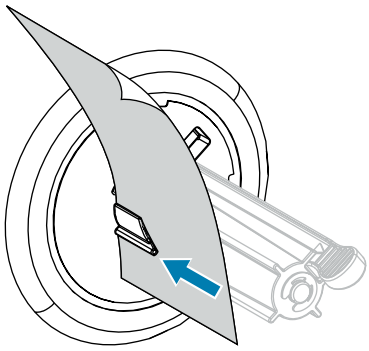

c) Wrap the liner around the liner take#up spindle and turn the spindle counterclockwise to tighten the liner.

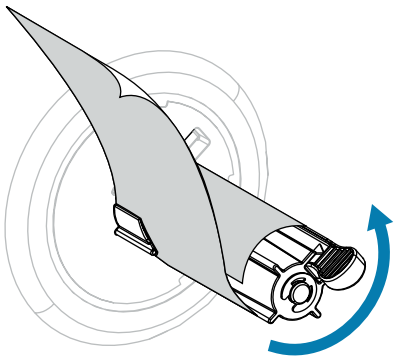

CAUTION: In the next step, use the peel release lever and your right hand to close the peel assembly. Do not use your left hand to assist in closing. The top edge of the peel roller/ assembly could pinch your fingers.

6. Close the peel assembly using the peel-off mechanism release lever.

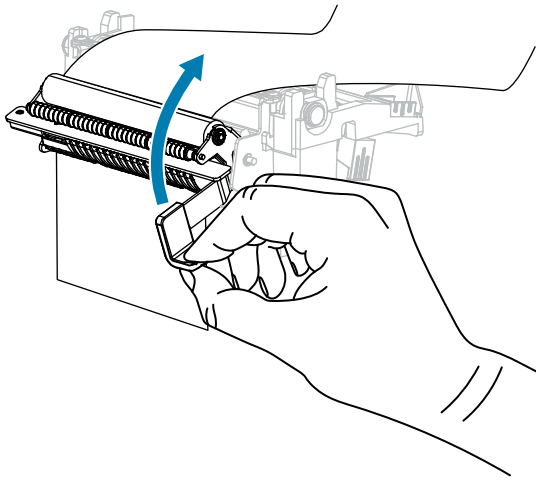

7. Slide in the outer media guide until it just touches the edge of the media.

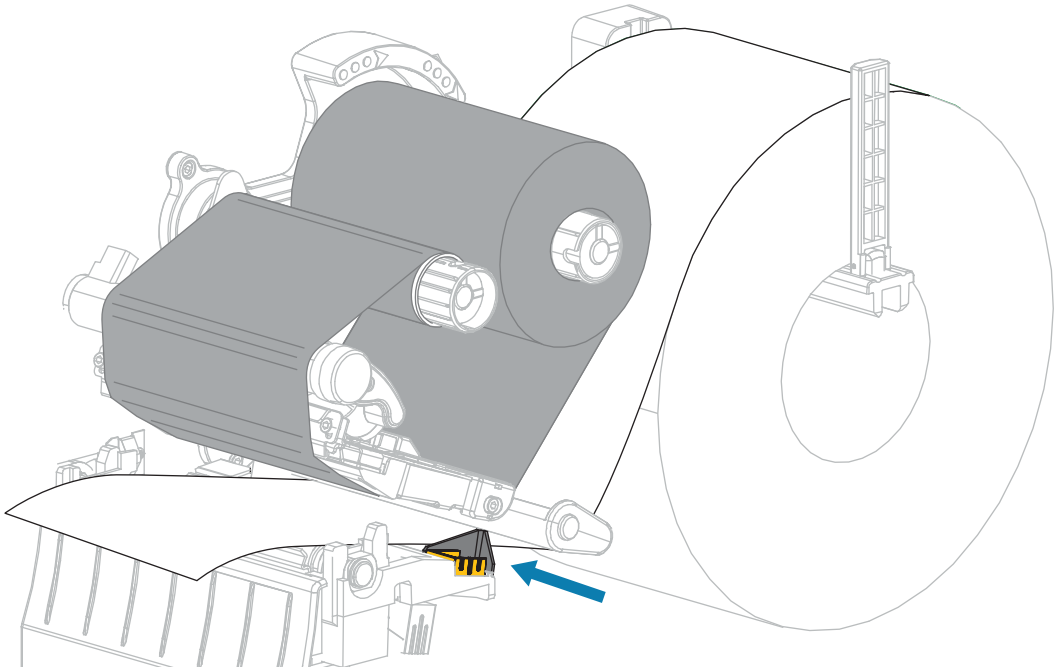

8. Rotate the printhead-open lever downward until it locks the printhead in place.

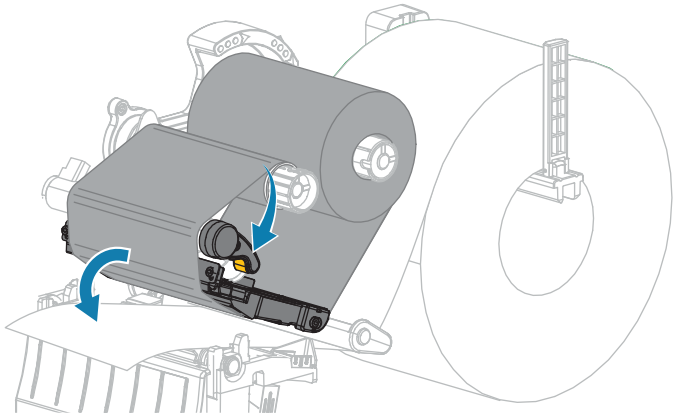

9. Set the printer to Peel-Off mode (for more information, see Print Mode).
10. Close the media door.

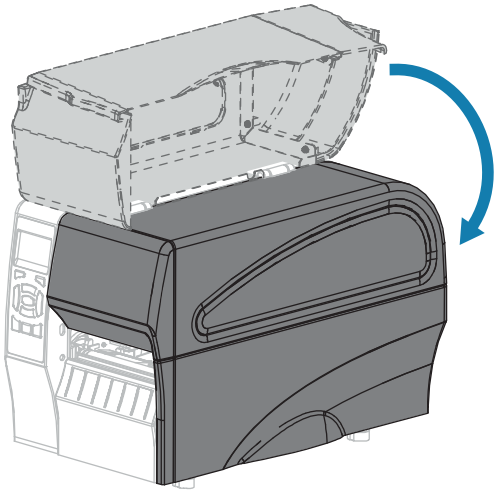

11. Press **PAUSE** to exit pause mode and enable printing.

    The printer may perform a label calibration or feed a label, depending on your settings.
12. For optimal results, calibrate the printer. See Calibrating the Ribbon and Media Sensors on page 111.
13. Perform the CANCEL Self Test on page 151 to verify that your printer is able to print a configuration label.

    Media loading in Peel-Off mode is complete.

Final Steps for Cutter Mode

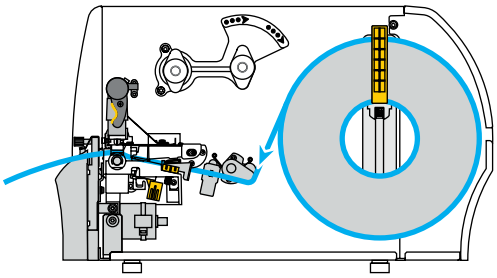

CAUTION: The cutter blade is sharp. Do not touch or rub the blade with your fingers.

1. Feed the media through the cutter.

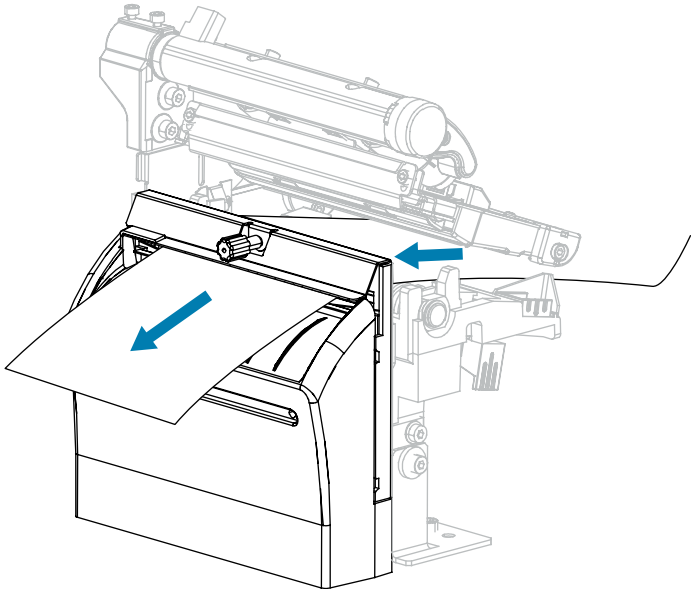

2. Slide in the outer media guide until it just touches the edge of the media.

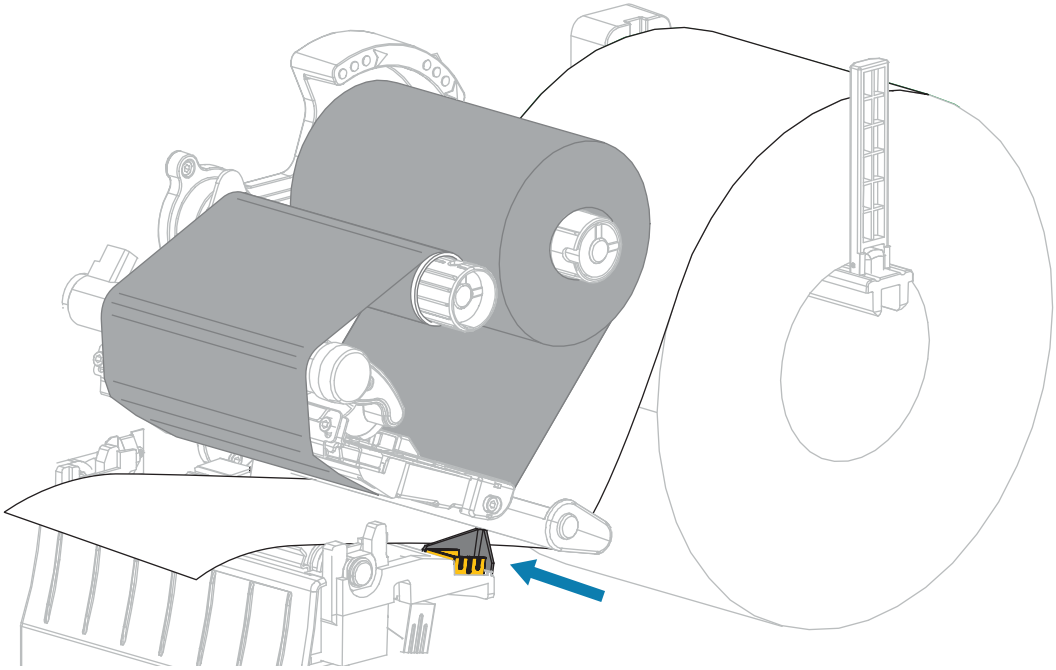

3. Rotate the printhead-open lever downward until it locks the printhead in place.

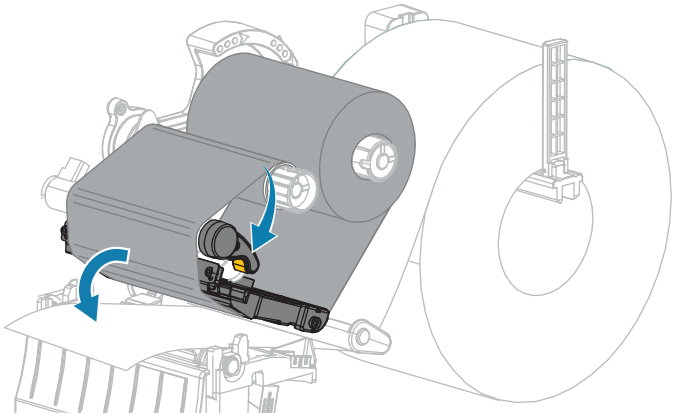

4. Set the printer to Cutter mode (for more information, see Print Mode).

5. Close the media door.

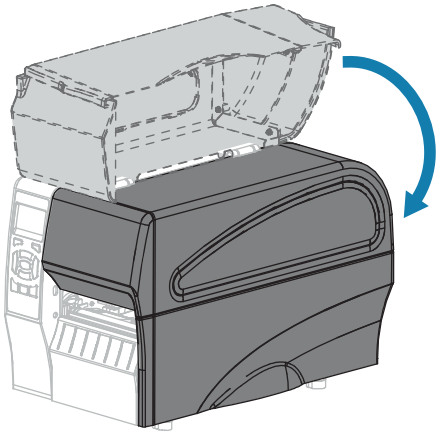

6. Press **PAUSE** to exit pause mode and enable printing.

   The printer may perform a label calibration or feed a label, depending on your settings.

7. For optimal results, calibrate the printer.

   See Calibrating the Ribbon and Media Sensors on page 111.

8. Perform the CANCEL Self Test on page 151 to verify that your printer is able to print a configuration label.

   Media loading in Cutter mode is complete.

Connecting the Printer to a Device

After you have set up the printer and verified that it can print a configuration label, you are ready to connect the printer to your device (such as a computer, phone, or tablet).

Connecting to a Phone or Tablet

Download the free Zebra Printer Setup Utility app for your device.

- Android devices
- Apple devices

The applications support the following types of connectivity:

- Bluetooth Classic
- Bluetooth Low Energy (Bluetooth LE)
- Wired/Ethernet
- Wireless
- USB On-The-Go

For the User Guides for these printer setup utilities, go to www.zebra.com/setup.

Installing Drivers and Connecting to a Windows-Based Computer

To use your printer with a Microsoft Windows-Based computer, you must install the correct drivers first.

IMPORTANT: You may connect your printer to your computer using any of the connections that you have available. However, do not connect any cables from your computer to the printer until you are instructed to do so. If you connect them at the wrong time, your printer will not install the correct printer drivers. To recover from incorrect driver installation, see What to Do If You Forget to Install Printer Drivers First on page 57.

Installing the Drivers

1. Navigate to www.zebra.com/drivers.
2. Click **Printers**.
3. Select your printer model.
4. On the printer product page, click **Drivers**.
5. Download the appropriate driver for Windows.

   The driver executable file (such as zd86423827-certified.exe) is added to your Download folder.
6. Run the executable file and follow the prompts.

   When the setup is complete, you may select to add the drivers to your system (Configure System) or to add specific printers, see Running the Printer Installation Wizard on page 49.

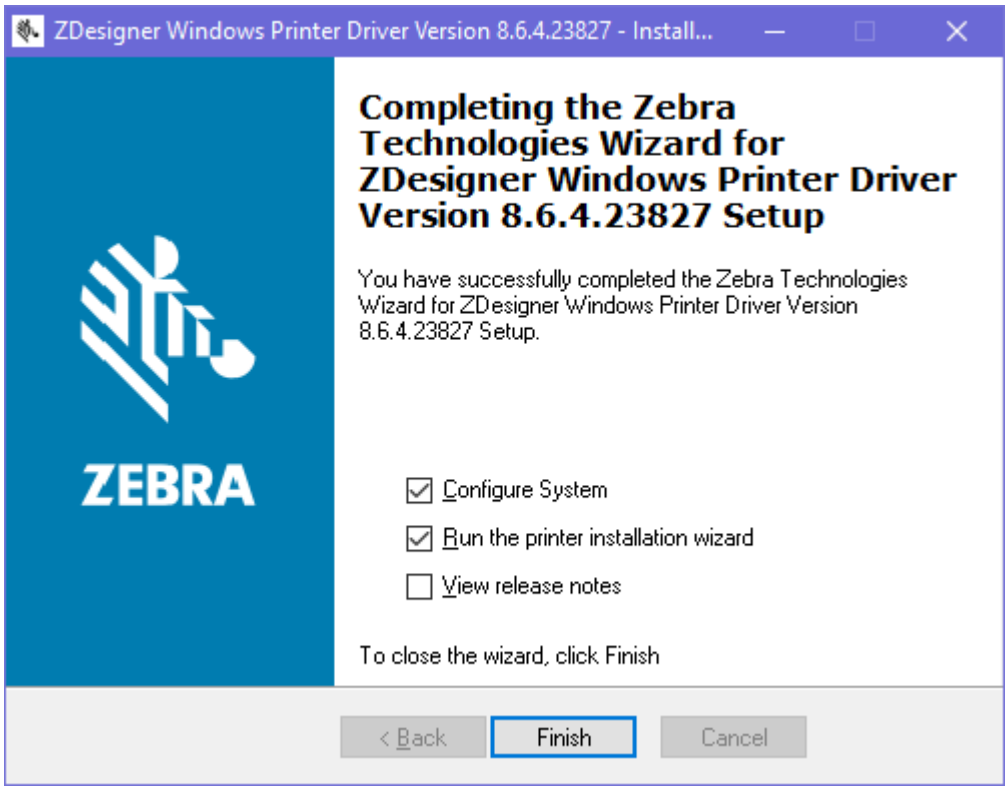

7. Select **Configure System**, and then click **Finish**.

   The **Printer Installation Wizard** installs the drivers.

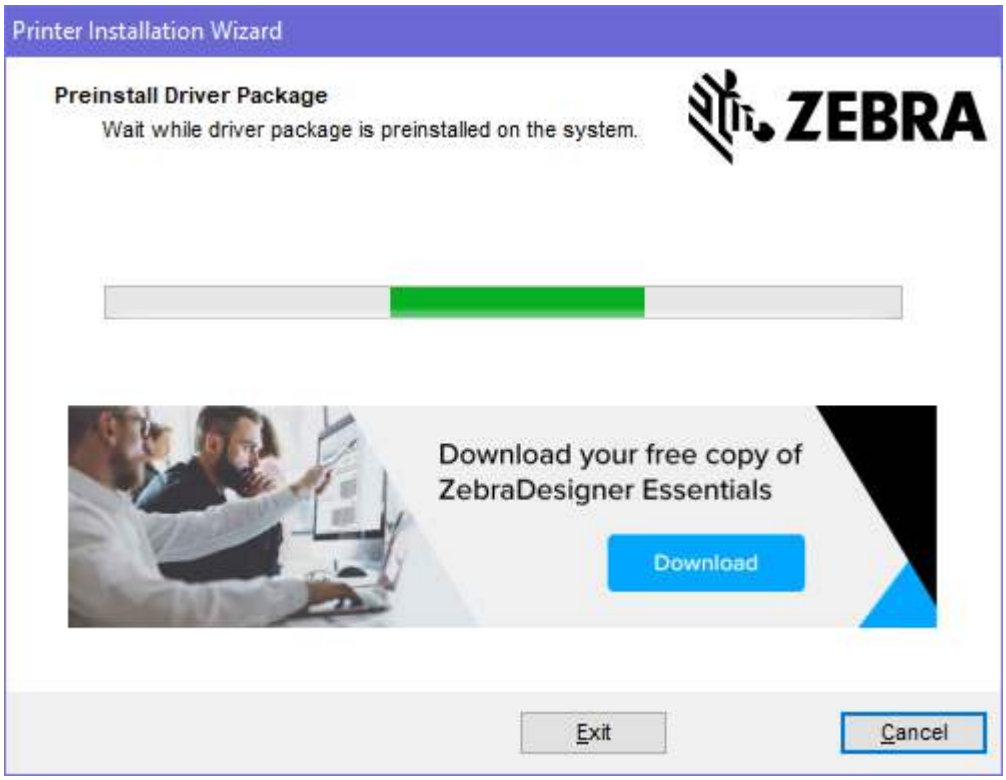

Running the Printer Installation Wizard

1. On the last screen of the driver installer, leave Run the Printer Installation Wizard checked, and then click **Finish**.

   The printer driver wizard displays.

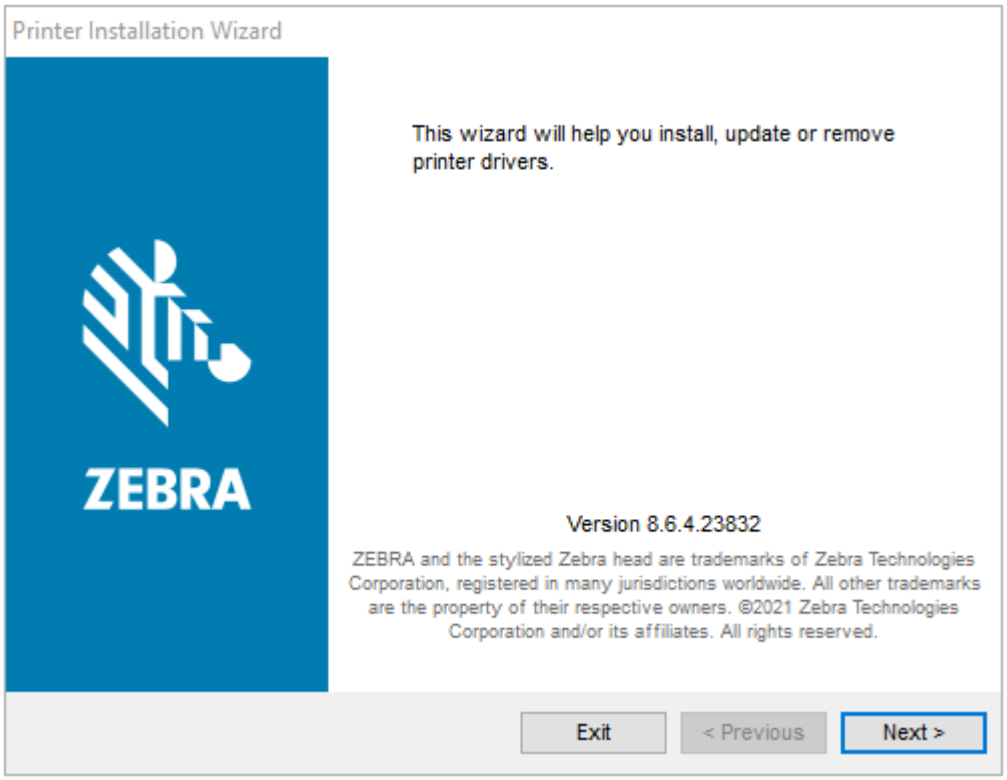

2. Click **Next**.

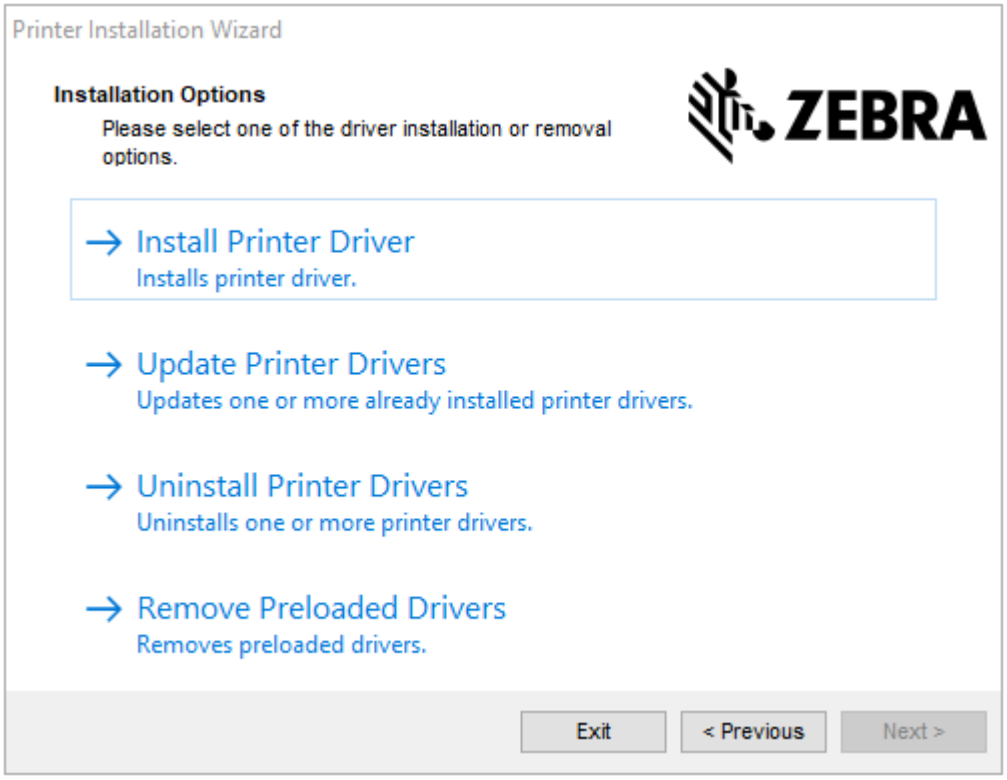
Printer Installation Wizard
Installation Options
Please select one of the driver installation or removal options.
ZEBRA
Install Printer Driver
Installs printer driver.
Update Printer Drivers
Updates one or more already installed printer drivers.
Uninstall Printer Drivers
Uninstalls one or more printer drivers.
Remove Preloaded Drivers
Removes preloaded drivers.
Exit
< Previous
Next >

3. Click **Install Printer Driver**.

   The license agreement displays.

4. Read and accept the terms of the license agreement, and then click **Next**.

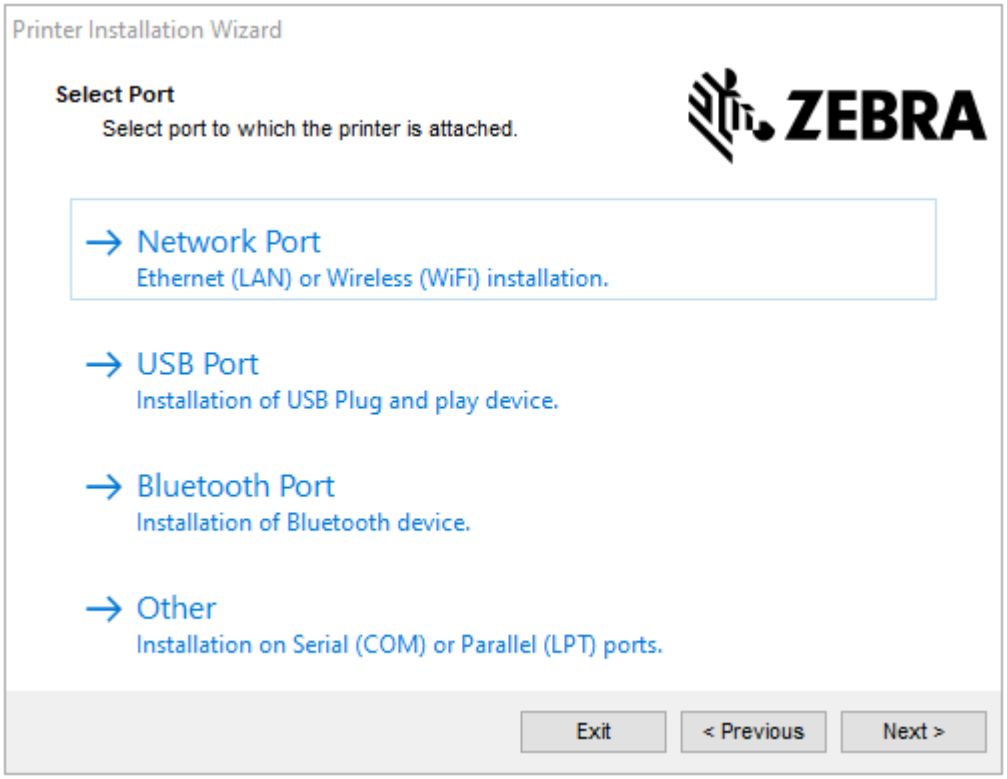

5. Select the communication option that you want to configure for your printer:
   - Network Port: For installing printers with an Ethernet (LAN) or wireless (Wi-Fi) network connection. Wait for the driver to scan your local network for devices and follow the prompts. If necessary, set the values as directed in Connect to Your Network through the Printer's Ethernet Port on page 57 or Connect the Printer to Your Wireless Network on page 58.
   - USB Port: For installing printers connected with the USB cable. Connect the printer to the computer as shown in Connect to a Computer Using the Printer's USB Port on page 55. If the printer is already connected and powered on, you may need to remove the USB cable and install it again. The driver will automatically search for the model of the connected printer.
   - Bluetooth Port: For installing printers with a Bluetooth connection. Not applicable for this printer.
   - Other: For installation on another type of cable, such as Parallel (LPT) and Serial (COM). No additional configuration is necessary.

6. If prompted, select your printer model and resolution.

   The model and resolution are on a part number sticker on the printer, usually located below the media hanger. The information will be in the following format:

   Part Number: XXXXXxY – xxxxxxxx where XXXXX = the printer model Y = the printer resolution (2 = 203 dpi, 3 = 300 dpi, 6 = 600 dpi) For example, in the part number ZT230x3 – xxxxxxxx ZT230 indicates that the printer is a ZT230 model 3 indicates that the printhead resolution is 300 dpi

   where

   XXXXX = the printer model

   Y = the printer resolution (2 = 203 dpi, 3 = 300 dpi, 6 = 600 dpi)

   Part Number: XXXXXxY – xxxxxxxx where XXXXX = the printer model Y = the printer resolution (2 = 203 dpi, 3 = 300 dpi, 6 = 600 dpi) For example, in the part number ZT230x3 – xxxxxxxx ZT230 indicates that the printer is a ZT230 model 3 indicates that the printhead resolution is 300 dpi

Connecting to a Computer Using the Printer's USB Port

1. After you install the drivers, connect the USB cord to the USB port on your printer.

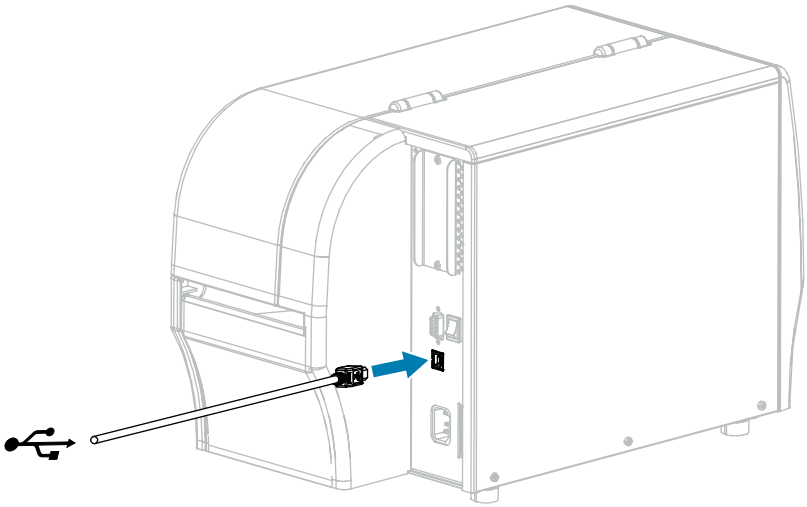

2. Connect the other end of the USB cord to your computer.

3. Plug the A/C power cord into the A/C power connector on the back of the printer.

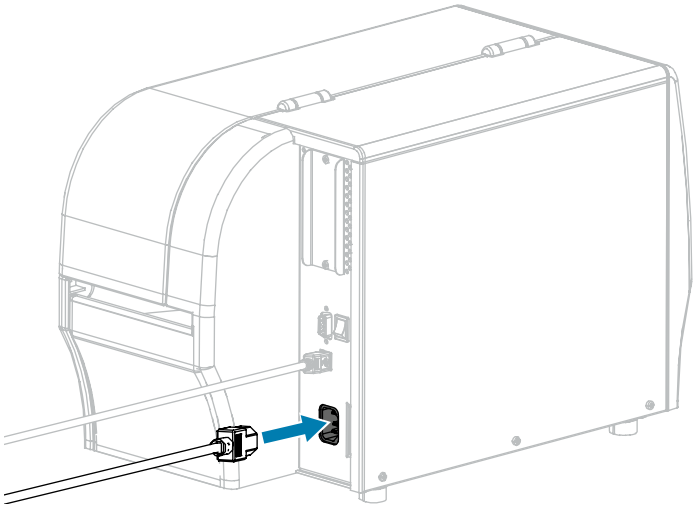

4. Plug the A/C power cord into an appropriate power outlet.

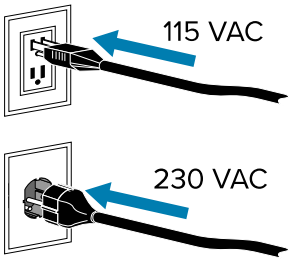

5. Turn on (I) the printer.

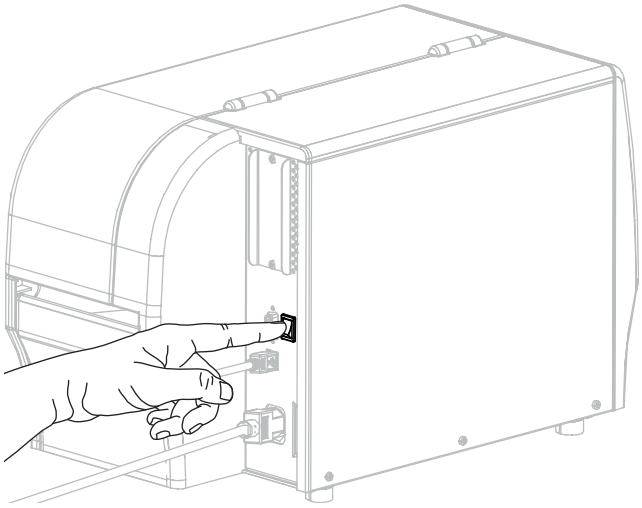

As the printer boots up, your computer completes the driver installation and recognizes your printer.

If you did not install the drivers first, see What to Do If You Forget to Install Printer Drivers First on page 57.

Connecting to Your Network through the Printer's Ethernet Port

If you wish to use a wired print server (Ethernet) connection, you may need to connect the printer to your computer using one of the other available connections. While the printer is connected via one of those connections, you would configure the printer to communicate with your Local Area Network (LAN) through the printer's wired print server.

For additional information about Zebra print servers, refer to the ZebraNet Wired and Wireless Print Server User Guide. To download the latest version of this guide, go to zebra.com/manuals.

1. Install the drivers as instructed in Installing Drivers and Connecting to a Windows-Based Computer on page 47.
2. Connect the printer to an Ethernet cable that is connected to your network.

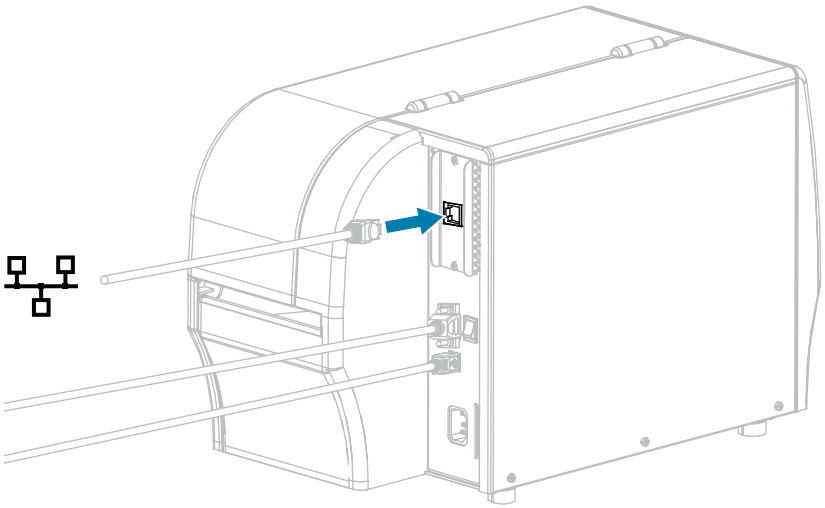

3. Plug the A/C power cord into an appropriate power outlet.

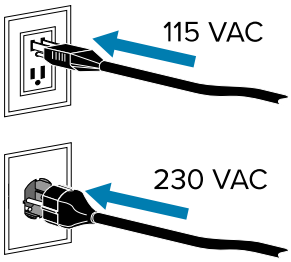

4. Turn on (I) the printer.

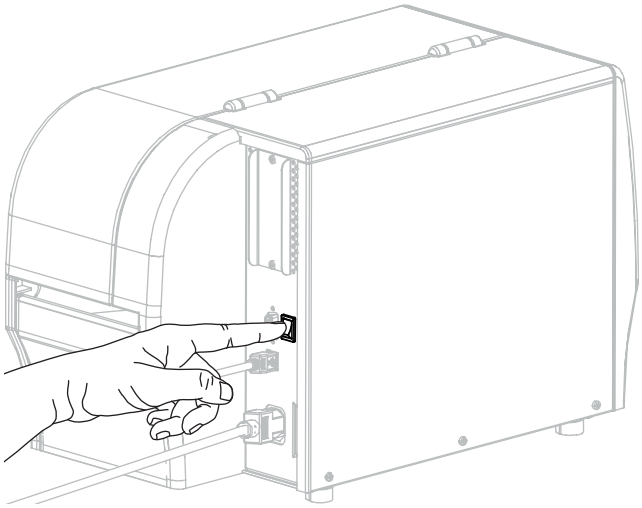

The printer attempts to communicate with your network. If it is successful, it fills in your LAN's gateway and subnet values and gets an IP address. The printer display will alternate between the printer's firmware version and its IP address.

5. Check the display to see if an IP address was assigned to the printer. See IP Address for additional ways to view the IP address. What is the printer's IP address?

If...	Then...
0.0.0.0 or 000.000.000.000	Configure the following printer settings. Contact your network administrator for the proper values for your network. • IP Protocol (change the value from ALL to PERMANENT) • Gateway (match the gateway value of your LAN) • Subnet Mask (match the subnet value of your LAN) • IP Address (assign a unique IP address to the printer)
any other value	The connection was successful.

6. Reset the network to allow changes to the network settings to take effect.

Connecting the Printer to Your Wireless Network

If you wish to use the printer's optional wireless print server, you must first connect the printer to your computer using one of the other available connections. While the printer is connected via one of those connections, you configure the printer to communicate with your Wireless Local Area Network (WLAN) through the wireless print server.

For additional information about Zebra print servers, refer to the ZebraNet Wired and Wireless Print Server User Guide. To download the latest version of this guide, go to zebra.com/manuals.

1. Install the drivers as instructed in Installing Drivers and Connecting to a Windows-Based Computer on page 47.

2. Plug the A/C power cord into an appropriate power outlet.

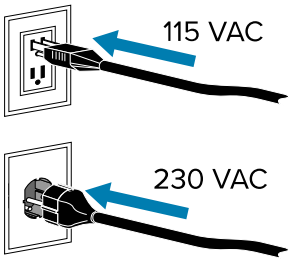

3. Turn on (I) the printer.

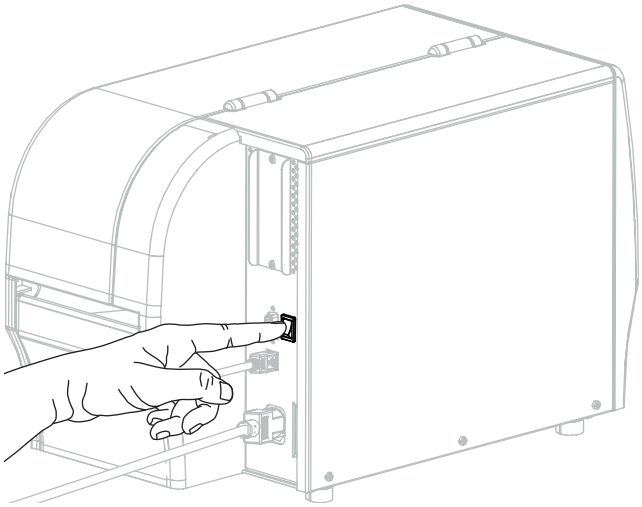

4. Configure the following printer settings. You can change the values through the Zebra Setup Utilities (click Configure Printer Connectivity on the Zebra Setup Utilities screen) or by the ways listed at the following links. Contact your network administrator for the proper values for your network.
   - IP Protocol (change the value from ALL to PERMANENT)
   - Gateway (match the gateway value of your WLAN)
   - Subnet Mask (match the subnet value of your WLAN)
   - IP Address (assign a unique IP address to the printer)
5. Reset the network to allow changes to the network settings to take effect.

What to Do If You Forget to Install Printer Drivers First

If you plug in your Zebra printer before installing the drivers, the printer displays as an Unspecified device.

1. Follow the instructions in Installing the Drivers on page 47 to download and install the drivers.
2. From the **Windows** menu, open the **Control Panel**.

3. Click **Devices and Printers**.

   In this example, the ZTC ZT320-203dpi ZPL is an incorrectly installed Zebra printer.

4. Right-click on the device, and select **Properties**.

   The properties for the device display.

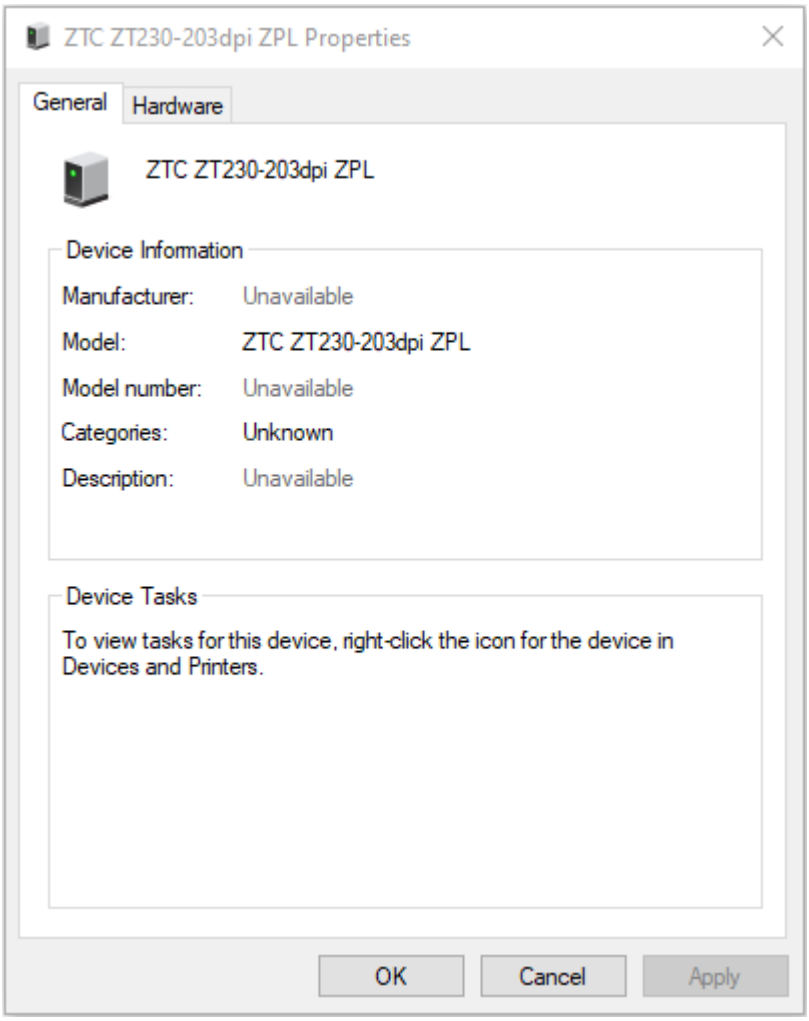

5. Click the **Hardware** tab.

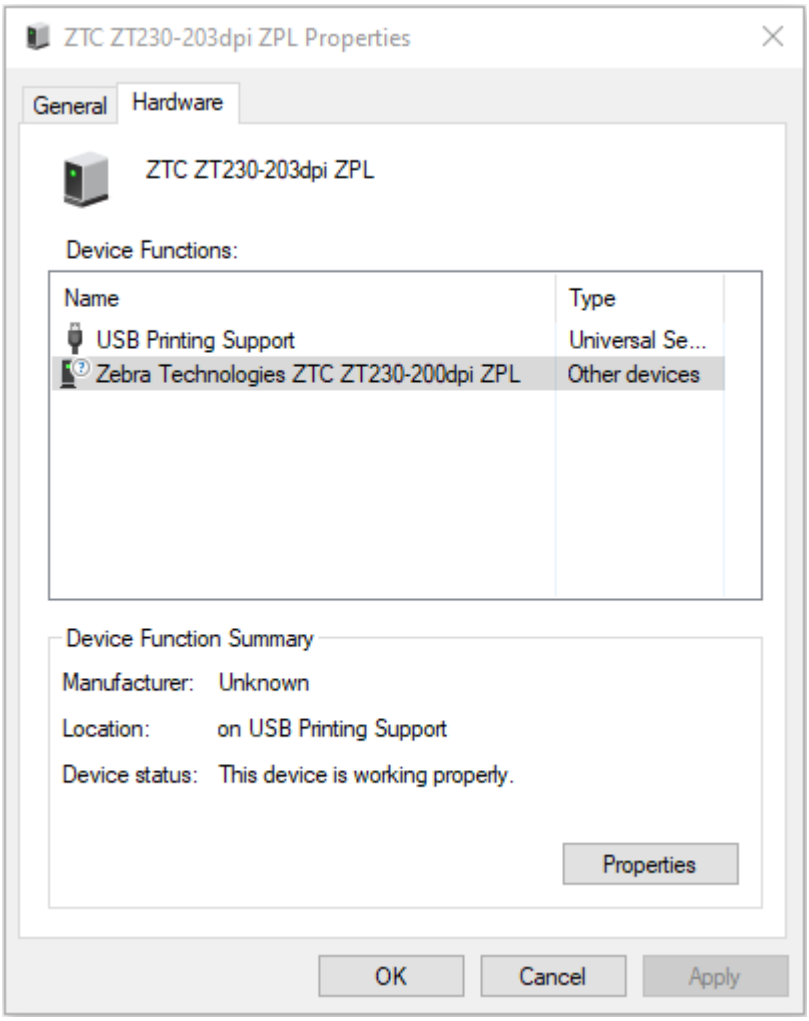

6. Select the Zebra printer in the **Device Functions** list, and then click **Properties**.

   The properties display.

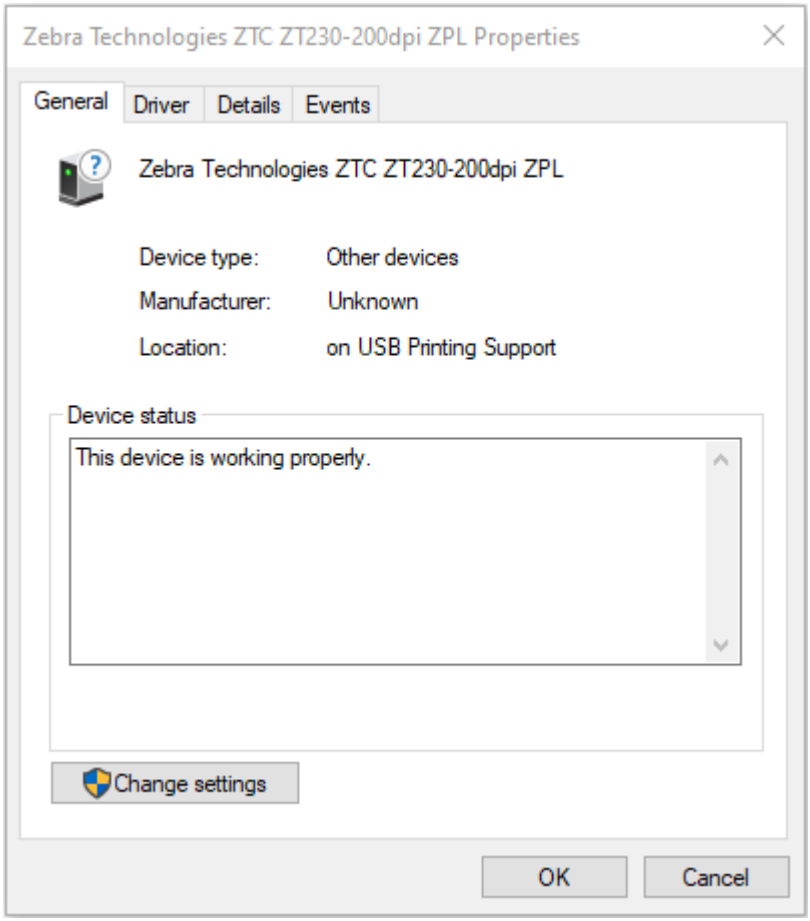

7. Click Change settings and then click the Driver tab.

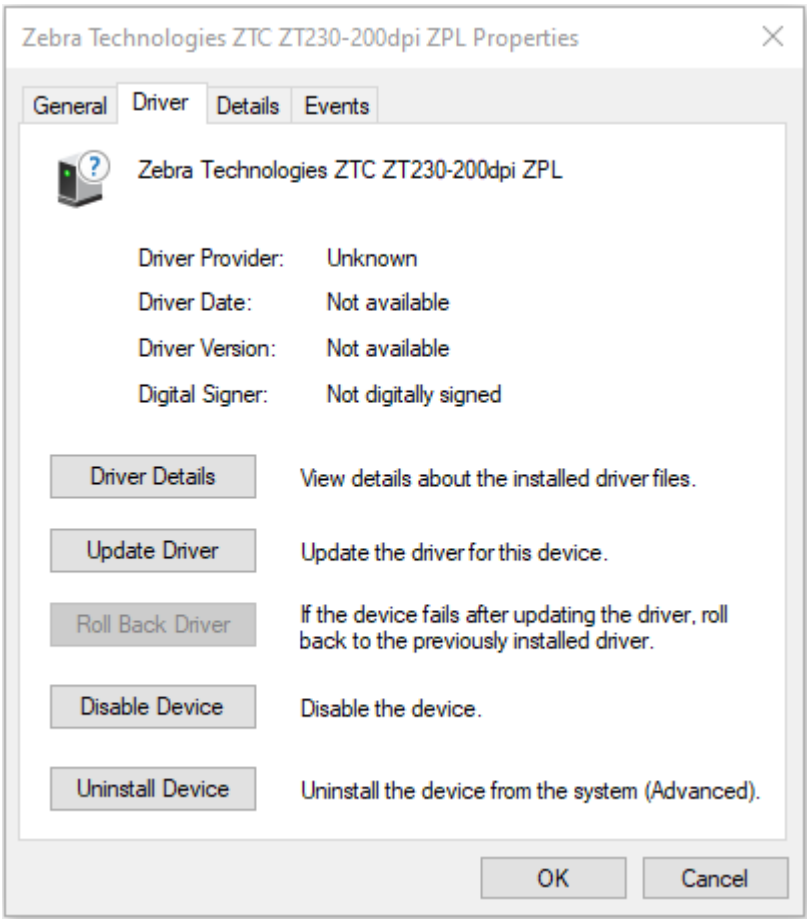

8. Click **Update Driver**.

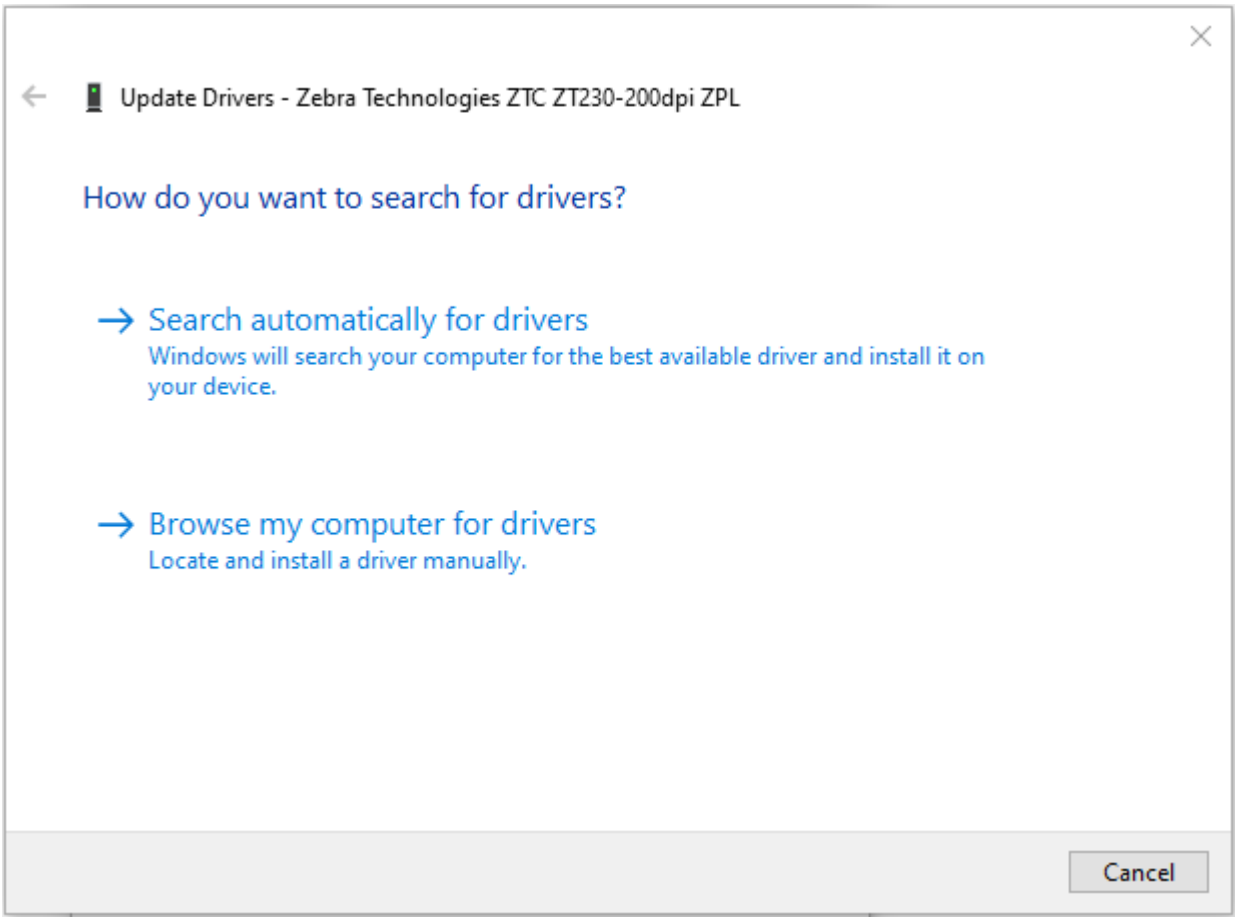

9. Click **Browse my computer for driver software**.
10. Click **Browse**... and navigate to the **Downloads** folder.

11. Click **OK** to select the folder.

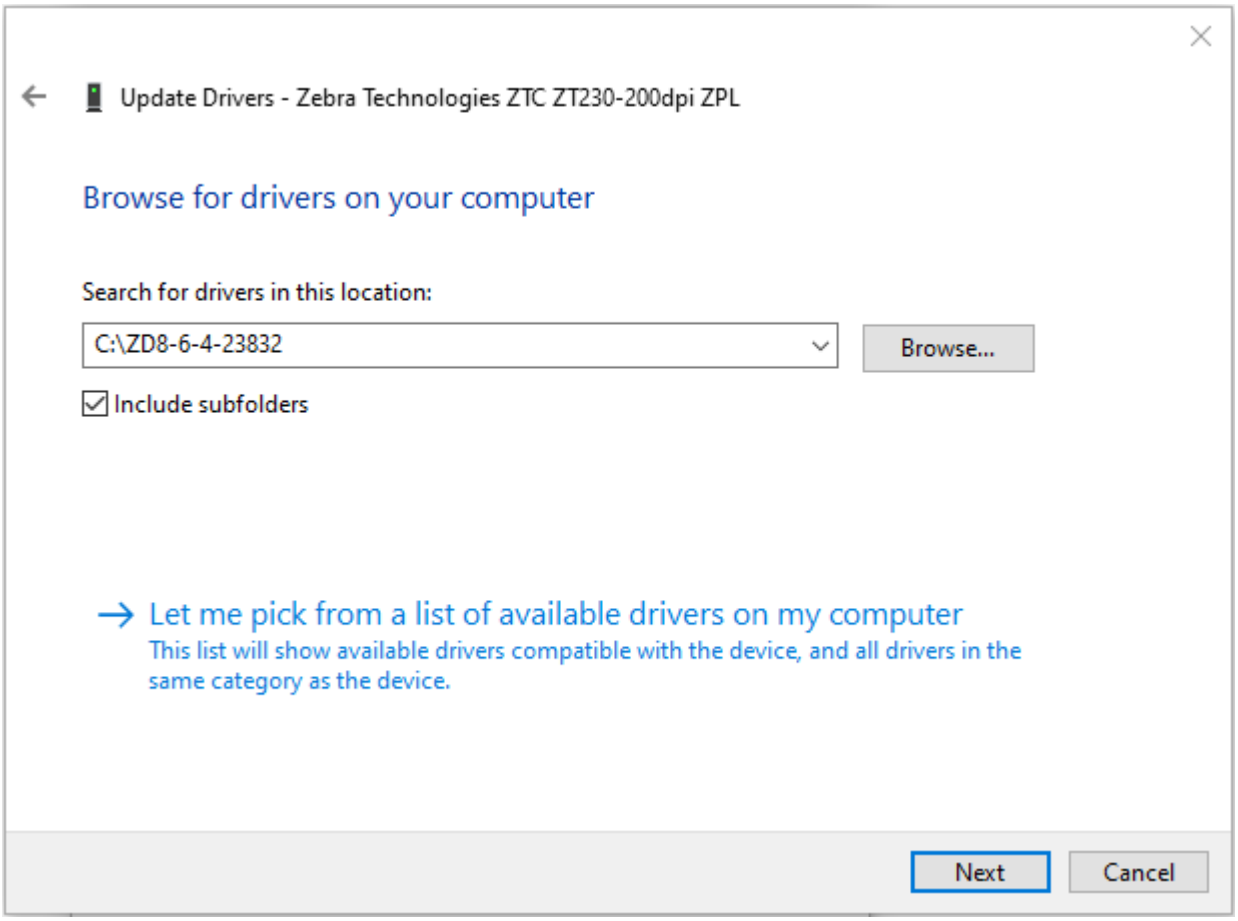

12. Click **Next**.

    The device is updated with the correct drivers.

Adding a Printer through Zebra Setup Utilities

If desired, you may use Zebra Setup Utilities to add printers to Windows using this procedure, after installing the drivers.

1. If necessary, install the Zebra Setup Utilities program.
   - **a)** Go to zebra.com/setup and download Zebra Setup Utilities for Windows.
   - **b)** Run the `zsu-xxxxxxx.exe` file that you downloaded.
   - **c)** Follow the prompts in the InstallAware Wizard.
   - **d)** In the final screen of the wizard, click the checkbox next to **Run Zebra Setup Utilities now**, and then click **Finish**.
   - **e)** Follow the prompts in the System Prepare Wizard.

2. If necessary, open the **Zebra Setup Utilities** program.

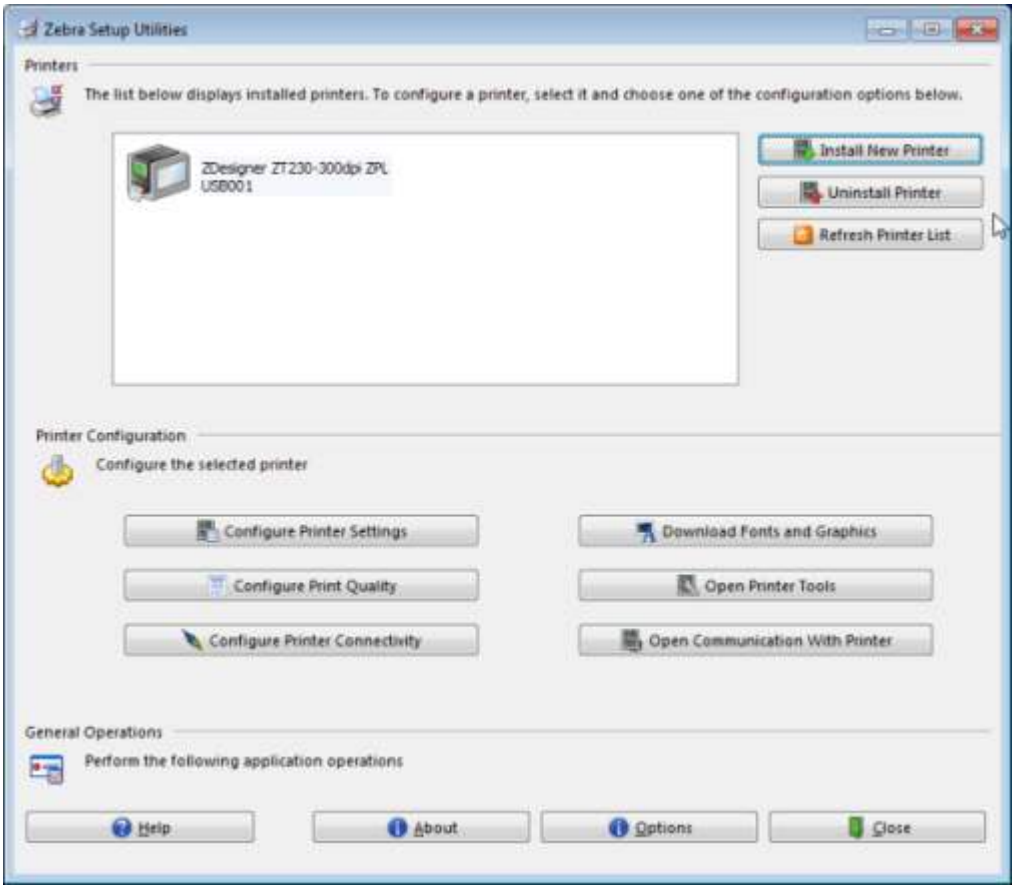

3. Click **Install New Printer**.

   The printer driver wizard displays.

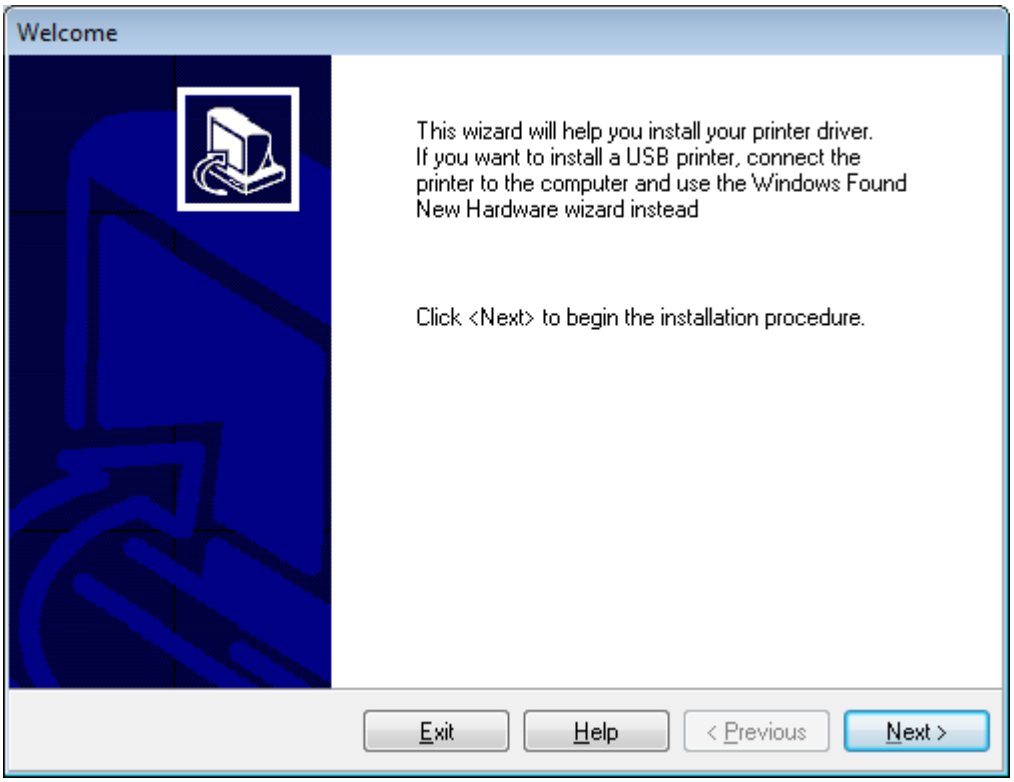

4. Click **Next**.

   You are prompted to select an installation option.

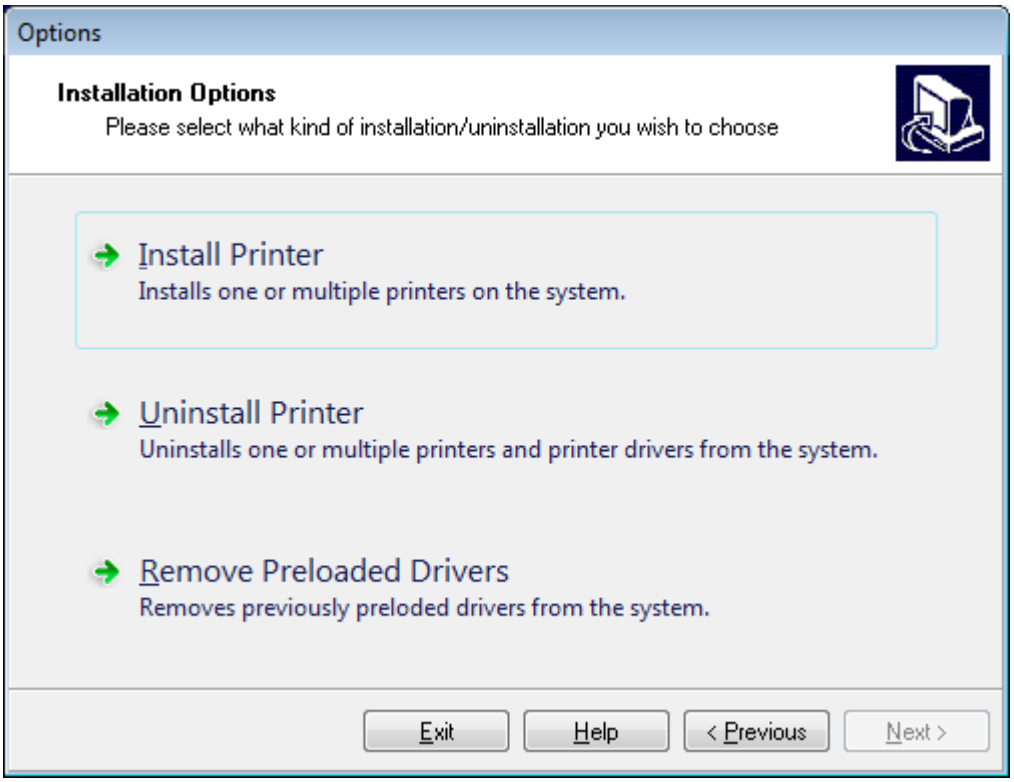

5. Click **Install Printer**.

   You are prompted to select a printer type.

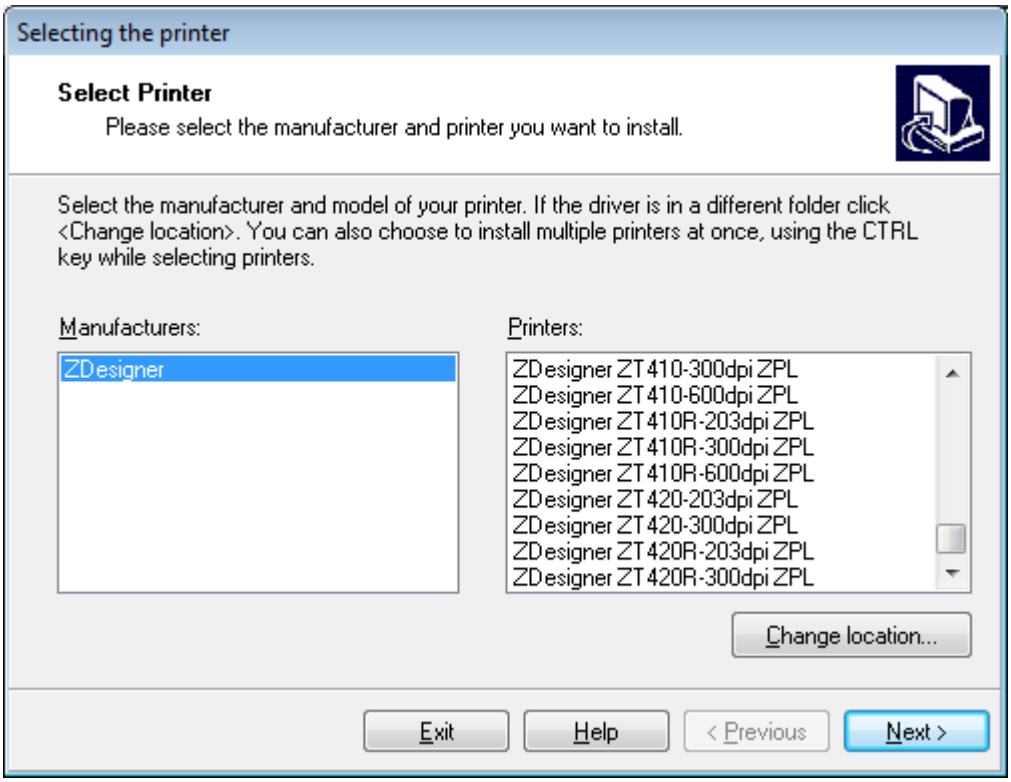

6. Select your printer model and resolution.

   The model and resolution are on a part number sticker on the printer, usually located below the media hanger. The information will be in the following format:

   Part Number: `XXXXXxY – xxxxxxxx`

   where

   XXXXX = the printer model

   Y = the printer resolution (2 = 203 dpi, 3 = 300 dpi, 6 = 600 dpi)

   For example, in the part number `ZT230x3 – xxxxxxxx`

   `ZT230` indicates that the printer is a ZT230 model

   3 indicates that the printhead resolution is 300 dpi

7. Click **Next**.

   You are notified that the printer is already installed.

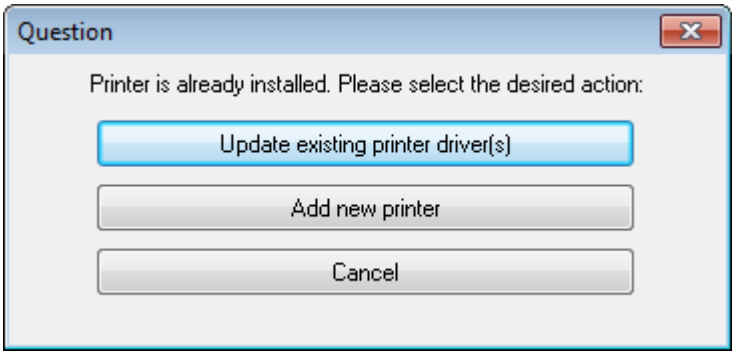

8. Click **Add new printer**.

   You are prompted for a printer name, the port to which the printer will be connected, and the language for the printer display.

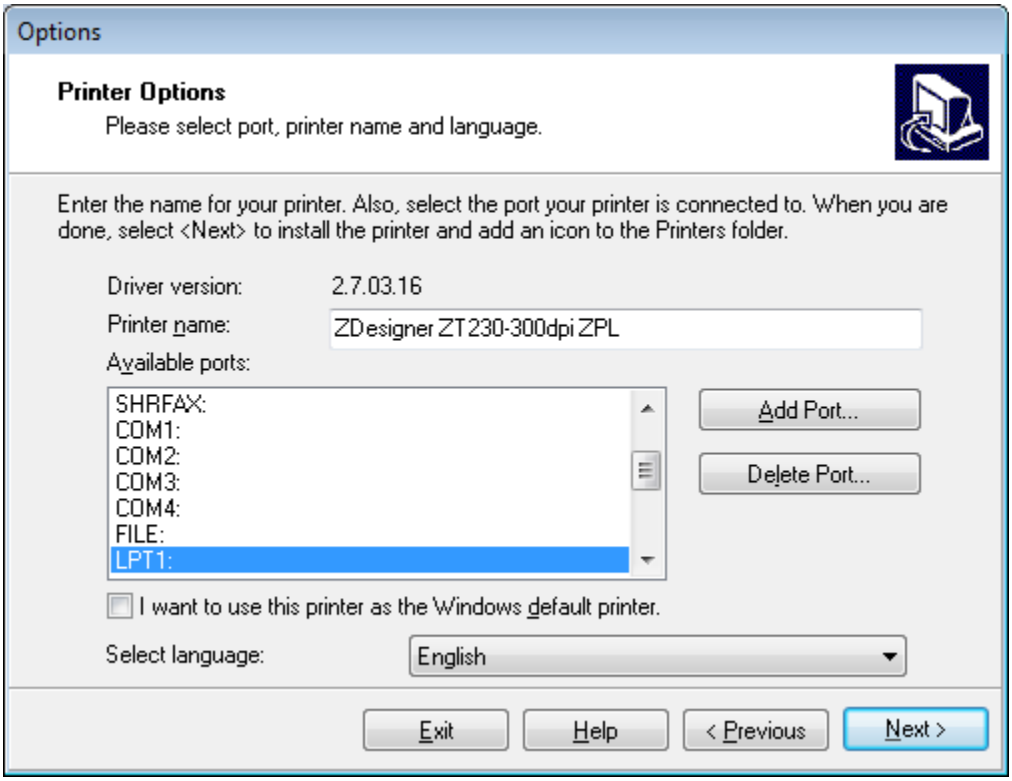

9. Click **Add Port**.

The wizard prompts you for a name for the port and the IP address of your printer.

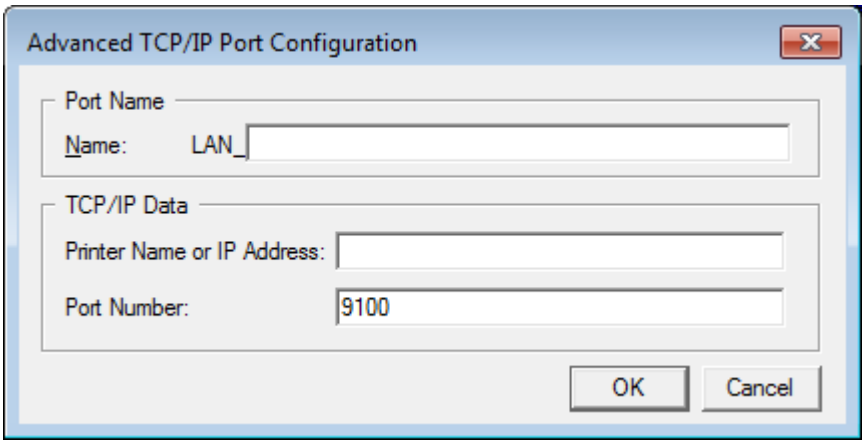

NOTE: If you have other applications open, you may be prompted that the driver is locked by another process. You may click **Next** to continue or **Exit** to allow you to save your work before continuing with this installation.

10. Give the port a name that you can recognize when it appears in the list of available ports.

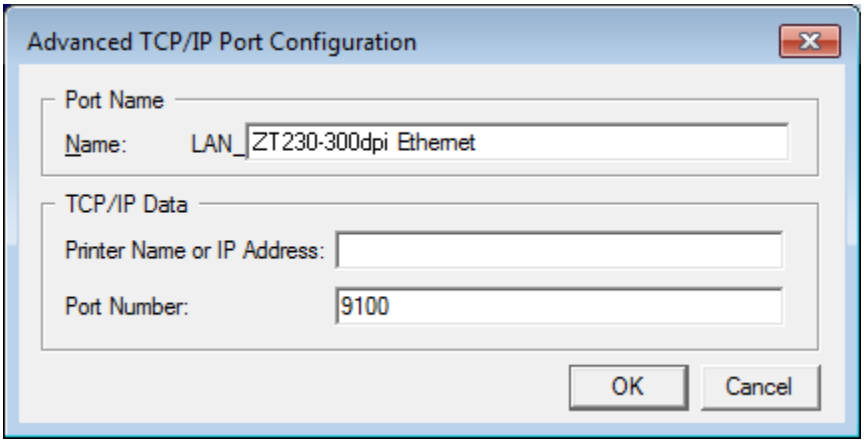

11. Enter the printer's IP address.

This could be one that was assigned automatically or one that you specified manually in the previous section.

12. Click **OK**.

A printer driver is created with the port name that you assigned. The new printer port appears in the list of available ports.

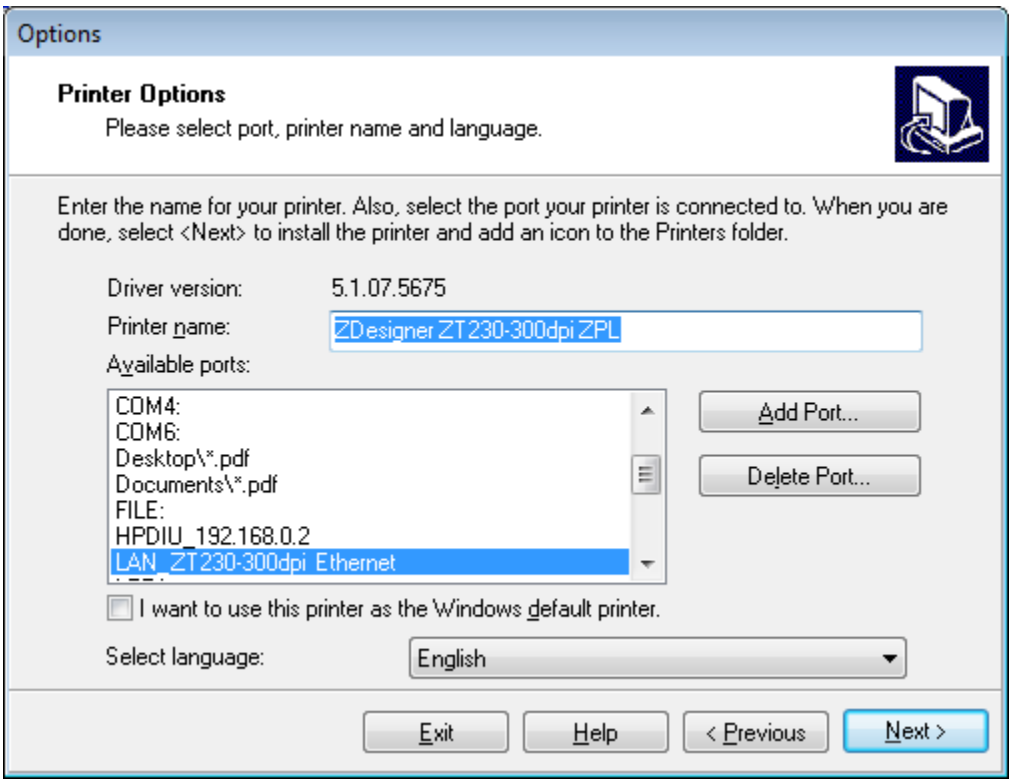

13. Click **Next**.

You are prompted to launch other setup wizards.

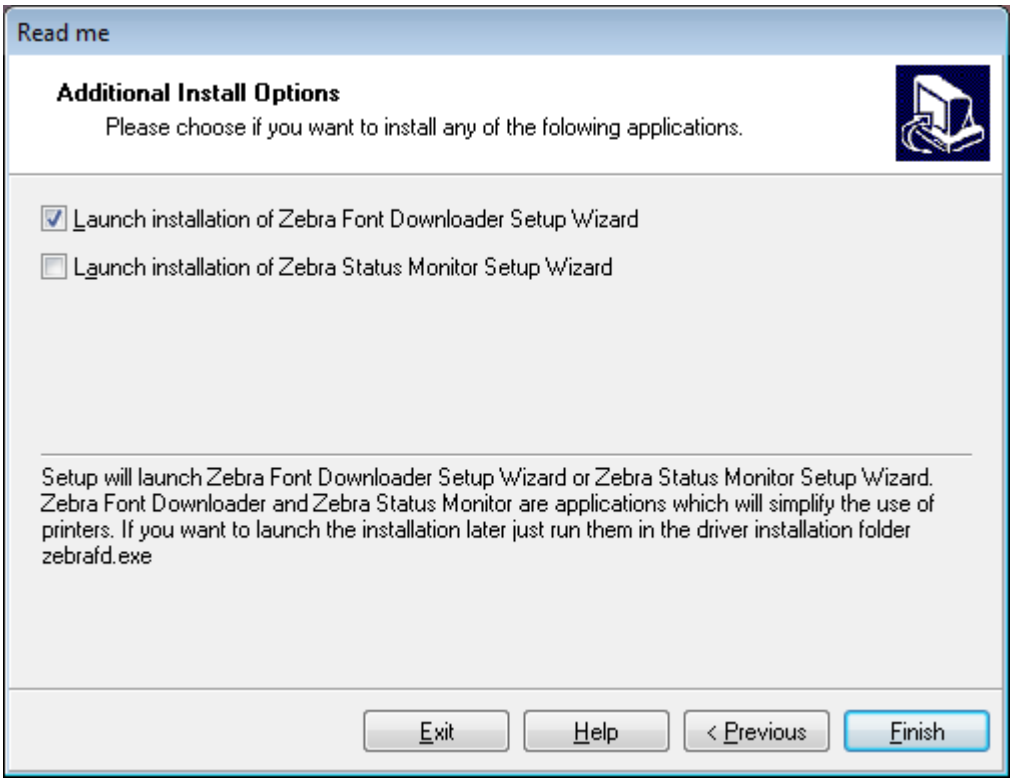

14. Check the desired options, and then click **Finish**.

The printer driver is installed. If you are prompted that other programs might be affected, click the appropriate option to continue.

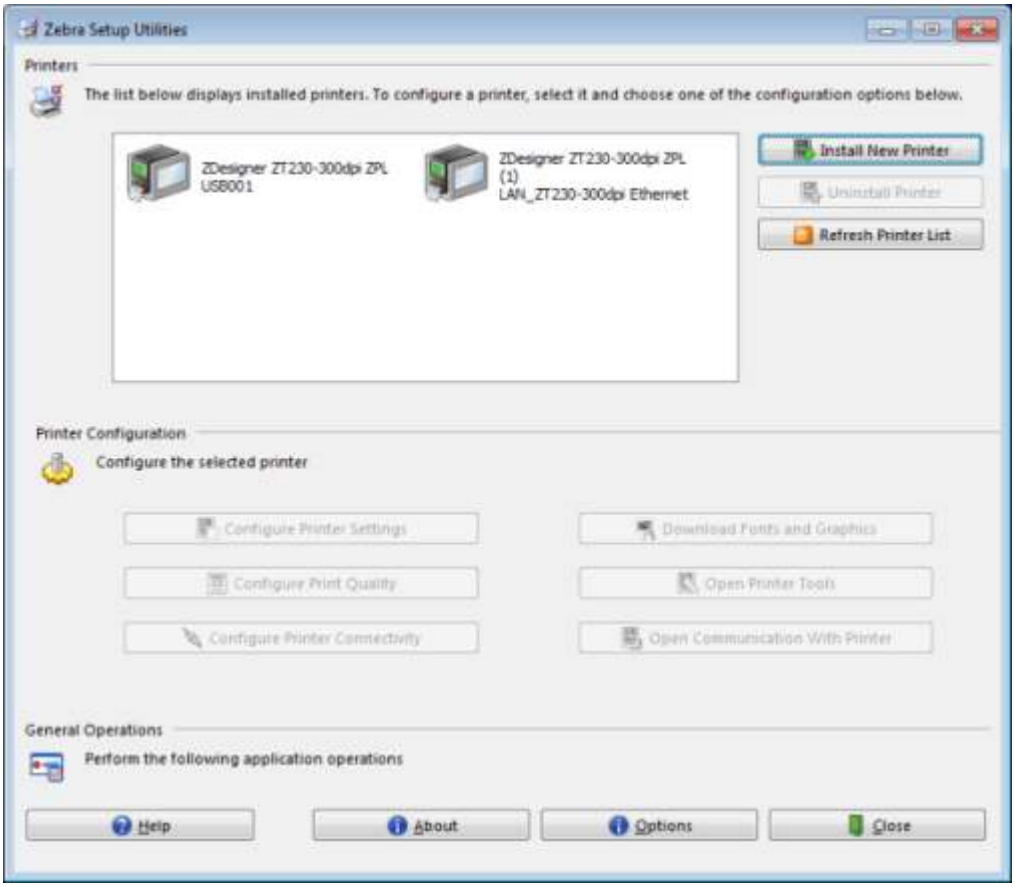

Printing a Test Label and Making Adjustments

After you have loaded media, loaded ribbon (if using Thermal Transfer mode), installed the printer driver, and connected your printer to your computer, use the directions in this section to print a test label. Printing this label allows you to see if your connection is working and if you need to adjust any of the printer settings.

1. Open the **Zebra Setup Utilities** to return to the **Zebra Setup Utilities** screen.

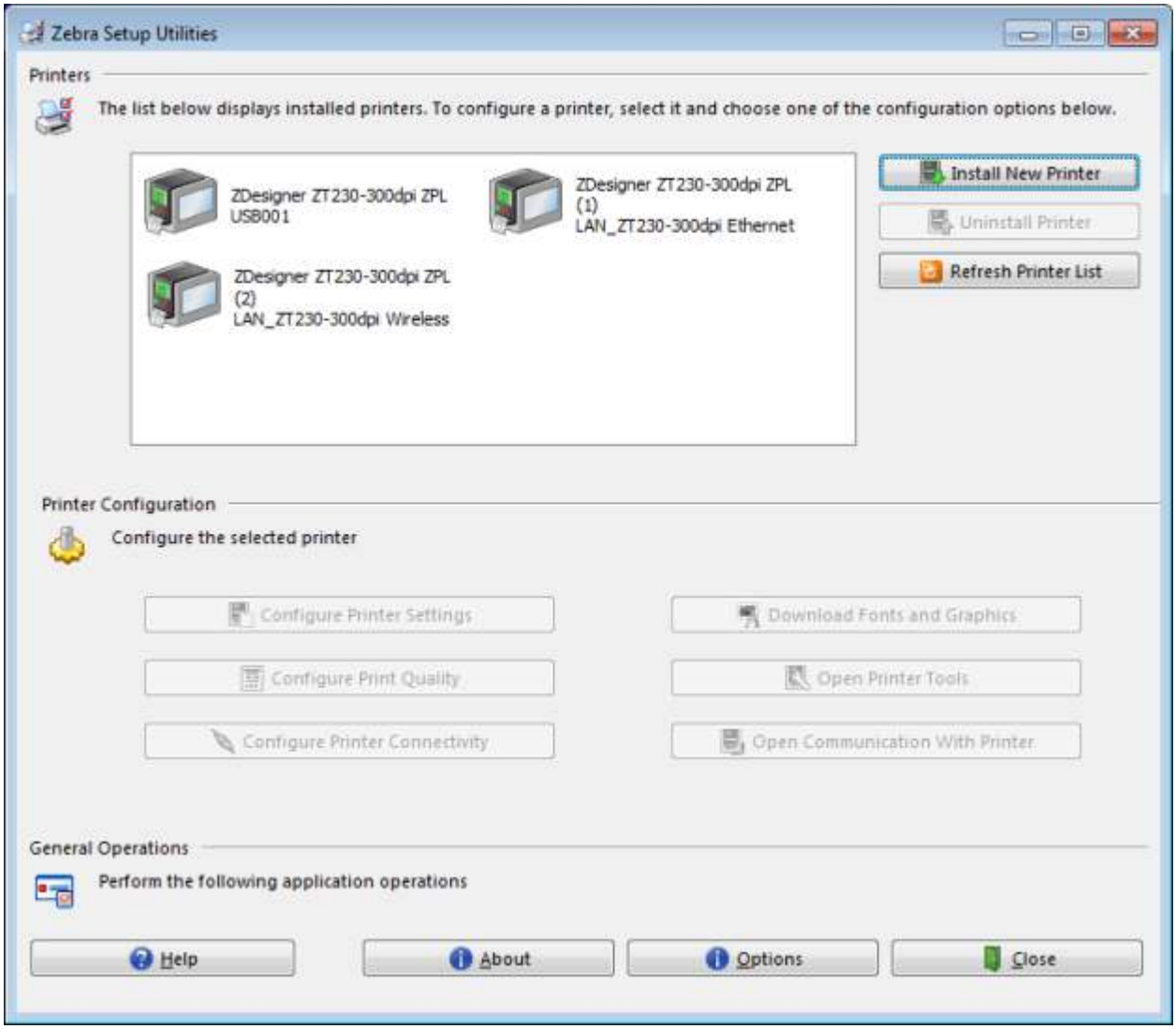

2. Click on one of the available print drivers for your printer.

3. Click **Open Printer Tools**.

   The **Tools** window displays the available printer commands.

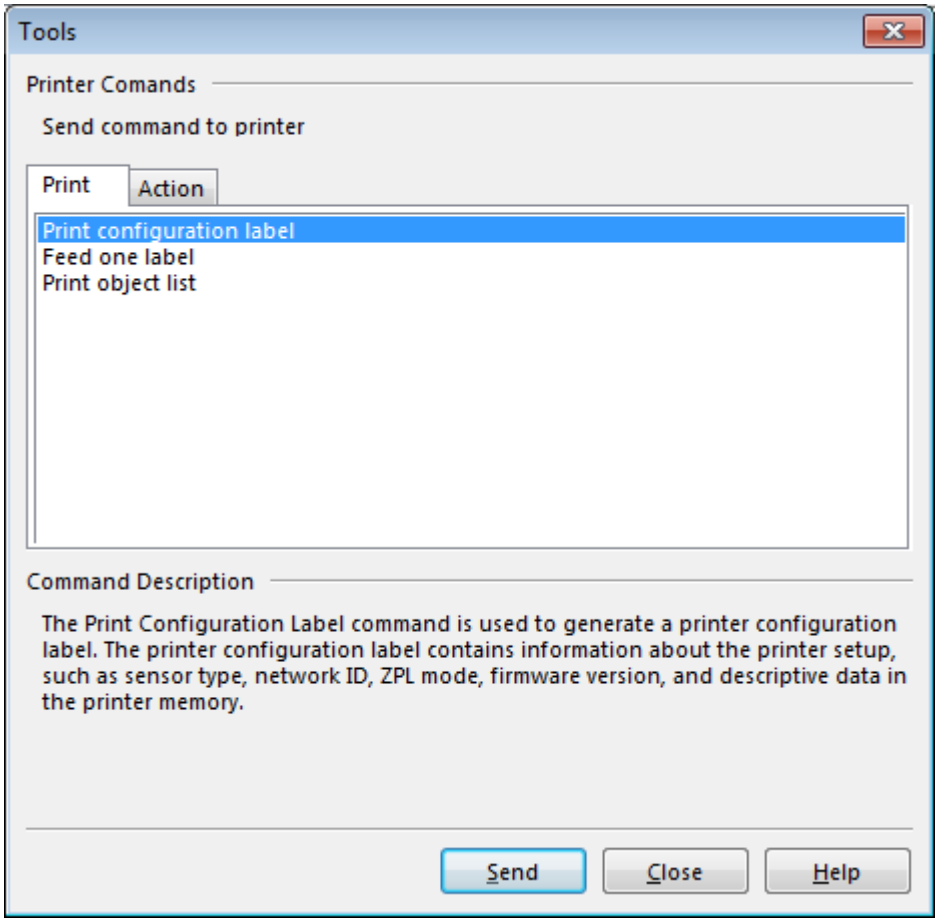

4. Click **Send** to print a printer configuration label.

   If your connection is working correctly and your printer is correctly loaded with media and ribbon (if used), a printer configuration label prints.

   Figure 5 Sample Printer Configuration Label

```
PRINTER CONFIGURATION

Zebra Technologies
ZTC ZT230-203dpi ZPL
XXXXXX-XX-XXXX

10................... LCD CONTRAST
+10.................. DARKNESS
2.0 IPS............... PRINT SPEED
+000................. TEAR OFF
TEAR OFF............. PRINT MODE
GAP/NOTCH............ MEDIA TYPE
REFLECTIVE........... SENSOR SELECT
832.................. PRINT WIDTH
1422................. LABEL LENGTH
.................... PRINT HEAD ID
39.01N   990MM...... MAXIMUM LENGTH
NOT CONNECTED........ USB COMM.
BIDIRECTIONAL........ PARALLEL COMM.
RS232................ SERIAL COMM.
2400................. BAUD
8 BITS............... DATA BITS
NONE................. PARITY
XON/XOFF............. HOST HANDSHAKE
NONE................. PROTOCOL
NORMAL MODE.......... COMMUNICATIONS
<~>  7EH............. CONTROL PREFIX
<^>  5EH............. FORMAT PREFIX
<,>  2CH............. DELIMITER CHAR
ZPL II............... ZPL MODE
CALIBRATION.......... MEDIA POWER UP
CALIBRATION.......... HEAD CLOSE
DEFAULT.............. BACKFEED
+000................. LABEL TOP
+0000................ LEFT POSITION
DISABLED............. REPRINT MODE
020.................. WEB SENSOR
024.................. MEDIA SENSOR
255.................. TAKE LABEL
027.................. MARK SENSOR
027.................. MARK MED SENSOR
102.................. TRANS GAIN
000.................. TRANS BASE
100.................. TRANS LED
050.................. MARK LED
OPCSWFXM............ MODES ENABLED
.................... MODES DISABLED
 832 8/MM FULL...... RESOLUTION
V72.18.12P15107 <-. FIRMWARE
1.3.................. XML SCHEMA
6.4.1 255........... HARDWARE ID
NONE................ OPTION BOARD
12288k...........R: RAM
65536k...........E: ONBOARD FLASH
NONE................ FORMAT CONVERT
FW VERSION.......... IDLE DISPLAY
07/20/12............ RTC DATE
02:37............... RTC TIME
DISABLED............ ZBI
2.1.................. ZBI VERSION
READY............... ZBI STATUS
15.110 IN........... NONRESET CNTR
15.110 IN........... RESET CNTR1
15.110 IN........... RESET CNTR2
38.378 CM........... NONRESET CNTR
38.378 CM........... RESET CNTR1
38.378 CM........... RESET CNTR2
FIRMWARE IN THIS PRINTER IS COPYRIGHTED
```

5. Based on the printer configuration label print, and the print quality choose from the following.

If...	Then...
The label printed and the print quality is acceptable	Your printer is ready for printing. See Installing Label Design Software on page 76.
The label did not print	**a.** Close the Tools window and make sure that you selected the correct printer driver before you click Open Printer Tools. Try printing the label again.

If...	Then...
	b. If the label still did not print, check the connections between your printer and your computer or your printer and your network. **c.** If necessary, modify the printer's settings to make them match your computer's settings.
The label prints, but with poor quality or other issues	See Printing Issues on page 140 for troubleshooting instructions.

Installing Label Design Software

Select and install the software that you will use to create label formats for your printer.

One option is ZebraDesigner, which you can download from www.zebra.com/zebradesigner. You can choose to use ZebraDesigner Essentials for free or purchase ZebraDesigner Professional for a more robust toolset.

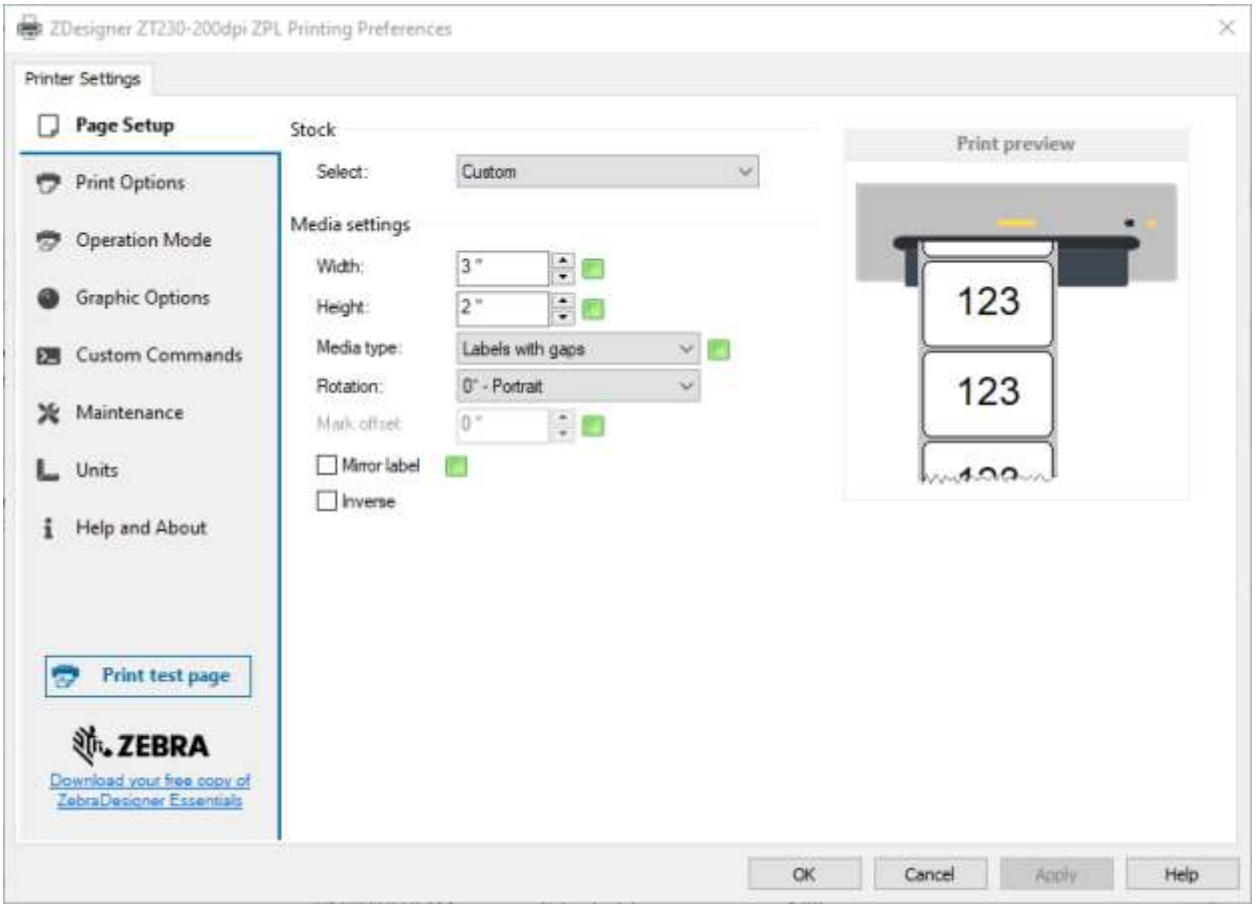

ZebraDesigner System Requirements

- 32-bit or 64-bit Windows 10 desktop editions, Windows 11 desktop editions, Windows Server 2016, Windows Server 2019, Windows Server 2022 operating systems.

- CPU: Intel or compatible x86 family processor
- Memory: 2 GB or more RAM
- Hard drive: 1 GB of available disk space
- Microsoft .NET Framework Version 4.7.2
- Display: 1366 × 768 or higher resolution monitor
- ZDesigner printer drivers

Remote Desktop Services and Virtual Machines are not supported.

Printer Configuration and Adjustment

This section assists you with configuration of and adjustments to the printer.

Changing Printer Settings

This section presents the printer settings that you can change and identifies the tools for changing them. These tools include the following:

- ZPL and Set/Get/Do (SGD) commands (See the Zebra® Programming Guide for more information.)
- The Windows driver installed previously. (See Changing Printer Settings through the Windows Driver on page 78 for more information.).
- For ZT230 printers only, the printer's user menus (See Idle Display, Home Menu, and User Menus on page 15 for more information.)
- The printer's web pages when the printer has an active wired or wireless print server connection (See the ZebraNet Wired and Wireless Print Servers User Guide for more information.)

Copies of the referenced manuals are available at zebra.com/manuals.

Changing Printer Settings through the Windows Driver

1. From the **Windows Start Menu**, go to **Printers & Scanners**.
2. Click your printer in the list of available printers, and then click **Manage**.

3. Click **Printing Preferences**.

   The ZDesigner window for your printer displays.

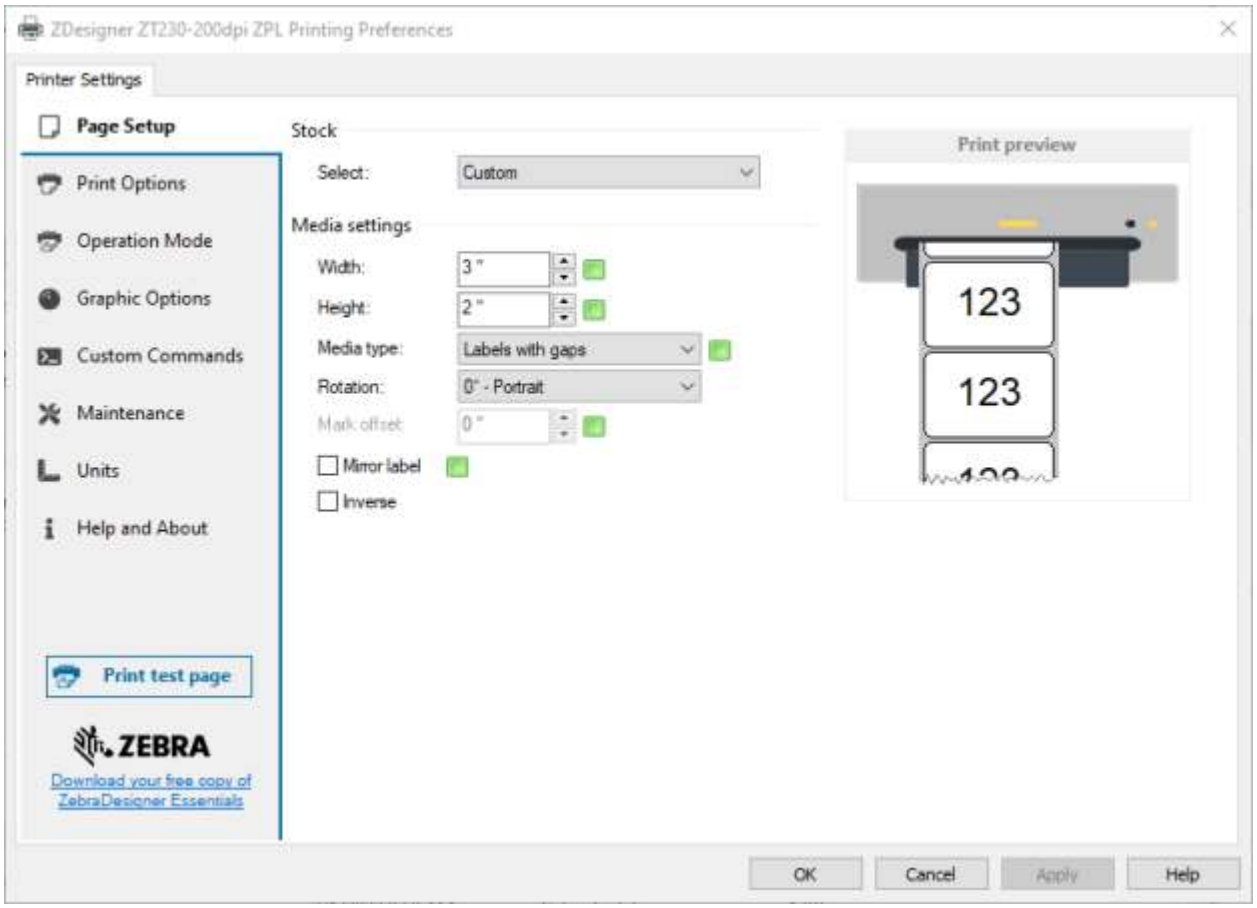

Changing Printer Settings through the User Menus

The following are the user menus and the items that appear in each.

SETTINGS

- DARKNESS
- PRINT SPEED
- MEDIA TYPE
- PRINT METHOD
- TEAR OFF
- PRINT WIDTH
- PRINT MODE
- LEFT POSITION
- REPRINT MODE
- LABEL LENGTH MAX
- LANGUAGE
- TOOLS MENU*

TOOLS

- PRINT INFORMATION
- LCD CONTRAST
- IDLE DISPLAY
- POWER UP ACTION
- HEAD CLOSE ACTION
- LOAD DEFAULTS
- MEDIA/RIBBON CAL
- DIAGNOSTIC MODE
- ZBI ENABLED?
- RUN ZBI PROGRAM
- STOP ZBI PROGRAM
- NETWORK MENU*

NETWORK

- ACTIVE PRINT SERVER
- IP ADDRESS
- SUBNET MASK
- GATEWAY
- IP PROTOCOL
- MAC ADDRESS
- ESSID
- PRINT INFORMATION
- RESET NETWORK
- LOAD DEFAULTS
- LANGUAGE MENU*

LANGUAGE

- LANGUAGE
- COMMAND LANGUAGE
- COMMAND CHAR
- CONTROL CHAR
- DELIMITER CHAR
- ZPL MODE
- SENSORS MENU*

SENSORS

- SENSOR TYPE
- MEDIA/RIBBON CAL
- PRINT INFORMATION
- LABEL SENSOR
- TAKE LABEL
- PORTS MENU*

PORTS

- BAUD RATE
- DATA BITS
- PARITY
- HOST HANDSHAKE
- SETTINGS MENU*

* Denotes a shortcut to the next user menu.

Print Settings

Table 4 Print Settings

Print Setting	Description
Print Darkness	Set the darkness to the lowest setting that provides good print quality. If you set the darkness too high, the label image may print unclearly, bar codes may not scan correctly, the ribbon may burn through, or the printhead may wear prematurely. If desired, use the FEED Self Test on page 153 to determine the optimal darkness setting.

Table 4 Print Settings (Continued)

Print Setting	Description	
	User menu item:	Main Menu > SETTINGS DARKNESS ▼ 10.0 ▲
	Accepted values:	0.0 – 30.0
	Related ZPL command(s):	^MD, ~SD
	SGD command used:	print.tone
	Printer web page:	**View and Modify Printer Settings** > **General Setup** > **Darkness**
Print Speed	Select the speed for printing a label (given in inches per second). Slower print speeds typically yield better print quality.	
	User menu item:	Main Menu > SETTINGS PRINT SPEED ▼ 0.6 ▲
	Accepted values:	2, 3, 4, 5, 6
	Related ZPL command(s):	^PR
	SGD command used:	media.speed
Media Type	Select the type of media that you are using.	

Table 4 Print Settings (Continued)

Print Setting	Description	
	User menu item:	Main Menu > SETTINGS MEDIA TYPE ▼ GAP/NOTCH ▲
	Accepted values:	• CONTINUOUS • GAP/NOTCH • MARK If you select CONTINUOUS, you must include a label length in your label format (^LL if you are using ZPL).
	Related ZPL command(s):	^MN
	SGD command used:	ezpl.media_type
	Printer web page:	**View and Modify Printer Settings** > **Media Setup** > **Media Type**
Print Method	Specify if the printer is to use Direct Thermal mode (no ribbon) or Thermal Transfer mode (using thermal transfer media and ribbon).	
	User menu item:	Main Menu > SETTINGS PRINT METHOD ▼ THERMAL TRANS ▲
	Accepted values:	• THERMAL TRANS • DIRECT THERMAL
	Related ZPL command(s):	^MT
	SGD command used:	ezpl.print_method

Table 4 Print Settings (Continued)

Print Setting	Description	
	Printer web page:	**View and Modify Printer Settings** > **Media Setup** > **Print Method**
Tear-Off Position	If necessary, adjust the position of the media over the tear#off bar after printing.	
	User menu item:	Main Menu > SETTINGS TEAR OFF ▼ 0 ▲
	Accepted values:	–120 to 120 • Higher numbers move the media out (the tear line moves closer to the leading edge of the next label). • Lower numbers move the media in (the tear line moves closer to the edge of the label just printed). 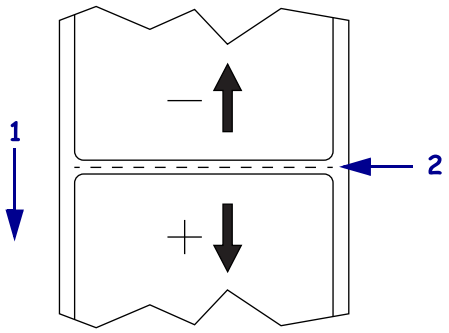 1 – Media direction 2 – Factory-set tear line location at position 000
	Related ZPL command(s):	~TA
	SGD command used:	ezpl.tear_off
	Printer web page:	**View and Modify Printer Settings** > **General Setup** > **Tear Off**

Table 4 Print Settings (Continued)

Print Setting	Description	
Print Width	Specify the width of the labels being used, in dots. The default value is the maximum width for the printer, based on the printhead's DPI value.	
	User menu item:	Main Menu > SETTINGS PRINT WIDTH ▼ 832 ▲
	Accepted values:	**NOTE:** Setting the width too narrow can result in portions of a label format not being printed on the media. Setting the width too wide wastes formatting memory and can cause the printer to print off of the label and onto the platen roller. This setting can affect the horizontal position of the label format if the image was inverted using the ^POI ZPL II command. 0000 to 1248 dots
	Related ZPL command(s):	^PW
	SGD command used:	ezpl.print_width
	Printer web page:	**View and Modify Printer Settings** > **Media Setup** > **Print Width**
Print Mode	Select a print mode that is compatible with your printer options. For information about how the print mode selections work with different printer options, see Selecting a Print Mode on page 23.	

Table 4 Print Settings (Continued)

Print Setting	Description	
	User menu item:	Main Menu > SETTINGS PRINT MODE ▼ TEAR OFF ▲
	Accepted values:	• TEAR OFF • CUTTER • PEEL (use this value for peel-off or liner take-up printing)
	Related ZPL command(s):	^MM
	SGD command used:	media.printmode
	Printer web page:	**View and Modify Printer Settings** > **General Setup** > **Print Mode**
Label Left Position	If necessary, shift the print position horizontally on the label. Positive numbers move the left edge of the image toward the center of the label by the number of dots selected, while negative numbers move the left edge of the image toward the left edge of the label.	
	User menu item:	Main Menu > SETTINGS LEFT POSITION ▼ 0 ▲
	Accepted values:	–9999 to 9999
	Related ZPL command(s):	^LS
	SGD command used:	zpl.left_position

Table 4 Print Settings (Continued)

Print Setting	Description	
	Printer web page:	**View and Modify Printer Settings** > **Advanced Setup** > **Left Position**
Reprint Mode	When reprint mode is enabled, you can reprint the last label printed by pressing the DOWN ARROW on the printer's control panel.	
	User menu item:	Main Menu > SETTINGS REPRINT MODE ▼ OFF ▲
	Accepted values:	• ON • OFF
	Related ZPL command(s):	^JZ
	SGD command used:	ezpl.reprint_mode
Maximum Label Length	Set the maximum label length.	
	User menu item:	Main Menu > SETTINGS LABEL LENGTH MAX ▼ 39 ▲

Table 4 Print Settings (Continued)

Print Setting	Description	
	Accepted values:	0 to the maximum label length supported by the printer **IMPORTANT:** Specify a value that is at least 1.0 in. (25.4 mm) greater than the actual label length plus the interlabel gap. If you set the value to one that is smaller than the label length, the printer assumes that continuous media is loaded, and the printer cannot calibrate. For example, if the label length is 6.0 inches (152 mm) including the interlabel gap, set the parameter for at least 7.0 inches (178 mm). 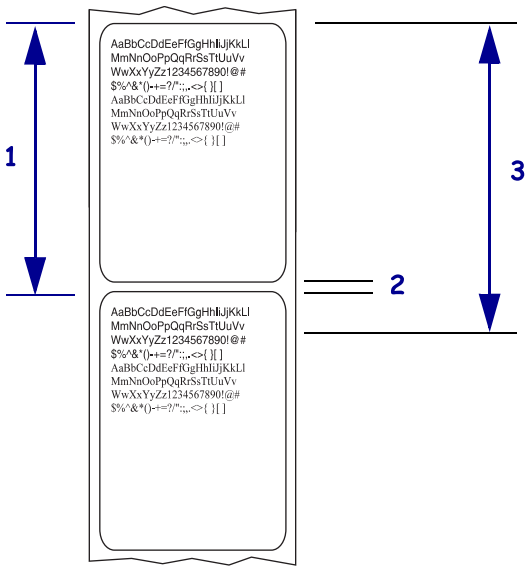 1 — Label length (including interlabel gap) 2 — Interlabel gap 3 — Set the maximum label length to approximately this value
	Related ZPL command(s):	^ML
	SGD command used:	ezpl.label_length_max
	Printer web page:	**View and Modify Printer Settings** > **Media Setup** > **Maximum Length**

Calibration and Diagnostic Tools

Table 5 Calibration and Diagnostic Tools

Item	Description
Print Information	Print the specified information on one or more labels.

Table 5 Calibration and Diagnostic Tools (Continued)

Item	Description	
	User menu item:	Main Menu > TOOLS PRINT INFORMATION ▼ SETTINGS ▲ PRINT Main Menu > NETWORK PRINT INFORMATION ▼ NETWORK ▲ PRINT Main Menu > SENSORS PRINT INFORMATION ▼ SENSOR PROFILE ▲ PRINT

Table 5 Calibration and Diagnostic Tools (Continued)

Item	Description	
Print Information	Accepted values:	• SETTINGS—prints the printer configuration label. • NETWORK—prints the settings for any print server that is installed. • FORMATS—prints the available formats stored in the printer's RAM, Flash memory, or optional memory card. • IMAGES—prints the available images stored in the printer's RAM, Flash memory, or optional memory card. • FONTS—prints the available fonts in the printer, including standard printer fonts plus any optional fonts. Fonts may be stored in RAM or Flash memory. • BARCODES—prints the available bar codes in the printer. Bar codes may be stored in RAM or Flash memory. • ALL—prints the previous six labels. • SENSOR PROFILE—shows the sensor settings compared to actual sensor readings. To interpret the results, see Sensor Profile on page 158.
	Related ZPL command(s):	SETTINGS: ~WC NETWORK: ~WL SENSOR PROFILE: ~JG Others: ^WD
	Control panel key(s):	SETTINGS and NETWORK: Do one of the following: • Hold CANCEL during printer power-up. • Hold FEED + CANCEL for 2 seconds when the printer is in the Ready state. SENSOR PROFILE: Hold FEED + CANCEL during printer power-up.
	Printer web page:	**View and Modify Printer Settings** > **Print Listings on Label**
LCD Contrast	Change the contrast on the printer's display. (ZT230 only)	

Table 5 Calibration and Diagnostic Tools (Continued)

Item	Description	
	User menu item:	Main Menu > TOOLS LCD CONTRAST ▼ 13 ▲
	Accepted values:	3 to 15
	SGD command used:	display.contrast
Idle Display	Select the information shown on the printer's display when the printer is idle. (ZT230 only)	
	User menu item:	Main Menu > TOOLS IDLE DISPLAY ▼ FW VERSION ▲
	Accepted values:	• FW VERSION • IP ADDRESS • MM/DD/YY 24 HR • MM/DD/YY 12 HR • DD/MM/YY 24 HR • DD/MM/YY 12 HR
	SGD command used:	device.idle_display_format
Power-Up Action	Set the action for the printer to take during the power-up sequence.	

Table 5 Calibration and Diagnostic Tools (Continued)

Item	Description	
	User menu item:	Main Menu > TOOLS POWER UP ACTION ▼ CALIBRATE ▲
	Accepted values:	• CALIBRATE—adjusts sensor levels and thresholds, determines the label length, and feeds the media to the next web. • FEED—feeds the labels to the first registration point. • LENGTH—determines the label length using current sensor values, and feeds the media to the next web. • NO MOTION—tells the printer not to move the media. You must manually ensure that the web is positioned correctly, or press feed to position the next web. • SHORT CAL—sets the media and web thresholds without adjusting sensor gain, determines the label length, and feeds the media to the next web.
	Related ZPL command(s):	^MF
	SGD command used:	ezpl.power_up_action
	Printer web page:	**View and Modify Printer Settings** > **Calibration**

Table 5 Calibration and Diagnostic Tools (Continued)

Item	Description	
Head-Close Action	Set the action for the printer to take when you close the printhead.	
	User menu item:	Main Menu > TOOLS HEAD CLOSE ACTION ▼ CALIBRATE ▲
	Accepted values:	• CALIBRATE—adjusts sensor levels and thresholds, determines the label length, and feeds the media to the next web. • FEED—feeds the labels to the first registration point. • LENGTH—determines the label length using current sensor values, and feeds the media to the next web. • NO MOTION—tells the printer not to move the media. You must manually ensure that the web is positioned correctly, or press feed to position the next web. • SHORT CAL—sets the media and web thresholds without adjusting sensor gain, determines the label length, and feeds the media to the next web.
	Related ZPL command(s):	^MF
	SGD command used:	ezpl.head_close_action
	Printer web page:	**View and Modify Printer Settings** > **Calibration**
Load Defaults	Restore specific printer, print server, and network settings back to the factory defaults. Use care when loading defaults because you will need to reload all settings that you changed manually.	

Table 5 Calibration and Diagnostic Tools (Continued)

Item	Description	
	User menu item:	Main Menu > TOOLS LOAD DEFAULTS ▼ FACTORY ▲ LOAD Main Menu > NETWORK LOAD DEFAULTS ▼ NETWORK ▲ LOAD
	Accepted values:	• FACTORY—Restores all printer settings other than the network settings back to the factory defaults. Use care when loading defaults because you will need to reload all settings that you changed manually. • NETWORK—Reinitializes the printer's wired or wireless print server. With a wireless print server, the printer also reassociates with your wireless network. • LAST SAVED—Loads settings from the last permanent save.
	Related ZPL command(s):	FACTORY: ^JUF NETWORK: ^JUN LAST SAVED: ^JUR

Table 5 Calibration and Diagnostic Tools (Continued)

Item	Description	
	Control panel key(s):	FACTORY: Hold FEED + PAUSE during printer power-up to reset the printer parameters to factory values. NETWORK: Hold CANCEL + PAUSE during printer power-up to reset the network parameters to factory values. LAST SAVED: N/A
	Printer web page:	FACTORY: View and Modify Printer Settings > Restore Default Configuration NETWORK: Print Server Settings > Reset Print Server LAST SAVED: View and Modify Printer Settings > Restore Saved Configuration
Media and Ribbon Sensor Calibration	Calibrate the printer to adjust the sensitivity of the media and ribbon sensors. For complete instructions on how to perform a calibration procedure, see Calibrating the Ribbon and Media Sensors on page 111.	
	User menu item:	Main Menu > TOOLS Main Menu > SENSORS MEDIA/RIBBON CAL START
	Related ZPL command(s):	~JC
	SGD command used:	ezpl.manual_calibration
	Control panel key(s):	Hold PAUSE + CANCEL for 2 seconds to initiate calibration.
	Printer web page:	The calibration procedure cannot be initiated through the web pages. See the following web page for settings that are set during sensor calibration: **View and Modify Printer Settings** > **Calibration** **IMPORTANT:** Do not change these settings unless you are told to do so by Zebra Technical Support or by an authorized service technician.

Table 5 Calibration and Diagnostic Tools (Continued)

Item	Description	
Communication Diagnostics Mode	Use this diagnostics tool to cause the printer to output the hexadecimal values for all data received by the printer. For more information, see Communication Diagnostics Test on page 157.	
	User menu item:	Main Menu > TOOLS DIAGNOSTIC MODE ▼ DISABLED ▲
	Accepted values:	• DISABLED • ENABLED
	Related ZPL command(s):	~JD to enable, ~JE to disable
	SGD command used:	device.diagnostic_print
	Control panel key(s):	Hold PAUSE + FEED for 2 seconds when the printer is in the Ready state.
Enable ZBI	Zebra Basic Interpreter (ZBI 2.0) is a programming option that may be purchased for your printer. If you would like to purchase this option, contact your Zebra reseller for more information.	
	User menu item:	Main Menu > TOOLS ZBI ENABLED? NO
	SGD command used:	zbi.key (identifies if the ZBI 2.0 option is enabled or disabled on the printer)
Run a ZBI Program	If you have ZBI installed, you may choose to run a ZBI program that you have downloaded to your printer.	

Table 5 Calibration and Diagnostic Tools (Continued)

Item	Description	
	User menu item: * * This menu item appears only if ZBI is enabled on your printer and no ZBI program is running.	Main Menu > TOOLS RUN ZBI PROGRAM ▼ E:DIVIDE.BAS ▲ RUN If ZBI programs exist on your printer, they are listed. If no program exists, NONE is listed. If you wish to run a ZBI program that you have downloaded to your printer: Use the UP ARROW or DOWN ARROW to select a file from this menu. Press RIGHT SELECT to select RUN. If no program exists, the RUN option does not perform an action.
	Related ZPL command(s):	^JI, ~JI
	SGD command used:	zbi.control.run
	Printer web page:	Directory Listing
Stop a ZBI Program	If your printer is running a ZBI program, you may stop that program.	
	User menu item: * * This menu item appears only if ZBI is enabled on your printer and no ZBI program is running.	Main Menu > TOOLS STOP ZBI PROGRAM STOP If ZBI programs are running, the printer lists them. If you wish to stop a program: Use the UP ARROW or DOWN ARROW to select the file from this menu. Press RIGHT SELECT to select STOP.
	Related ZPL command(s):	~JQ

Table 5 Calibration and Diagnostic Tools (Continued)

Item	Description	
	SGD command used:	zbi.control.terminate
	Printer web page:	Directory Listing

Network Settings

Table 6 Network Settings

Network Setting	Description	
IP Address	View and, if necessary, change the printer's IP address. To save changes to this setting, set IP Protocol to PERMANENT, and then reset the print server, see Reset Network.	
	User menu item: * * This menu item appears only if a wired or wireless print server is installed in your printer.	Main Menu > NETWORK IP ADDRESS ▼ 010.048.203.221 ▲ NEXT
	Accepted values:	000 to 255 for each field
	Related ZPL command(s):	^ND
	SGD command used:	Wired: internal_wired.ip.addrWireless: ip.addr, wlan.ip.addr
	Printer web page:	**View and Modify Printer Settings** > **Network Communications Setup** > **TCP/IP Settings**
Subnet Mask	View and, if necessary, change the subnet mask. To save changes to this setting, set IP Protocol to PERMANENT, and then reset the print server, see Reset Network.	

Table 6 Network Settings (Continued)

Network Setting	Description	
	User menu item: * * This menu item appears only if a wired or wireless print server is installed in your printer.	Main Menu > NETWORK SUBNET MASK ▼ 225.225.225.000 ▲ NEXT
	Accepted values:	000 to 255 for each field
	Related ZPL command(s):	^ND
	SGD command used:	Wired: internal_wired.ip.netmaskWireless: wlan.ip.netmask
	Printer web page:	**View and Modify Printer Settings** > **Network Communications Setup** > **TCP/IP Settings**
Gateway	View or Set the Default Gateway View and, if necessary, change the default gateway. To save changes to this setting, set IP Protocol to PERMANENT, and then reset the print server, see Reset Network.	
	User menu item: * * This menu item appears only if a wired or wireless print server is installed in your printer.	Main Menu > NETWORK GATEWAY ▼ 010.048.203.254 ▲ NEXT
	Accepted values:	000 to 255 for each field
	Related ZPL command(s):	^ND
	SGD command used:	Wired: internal_wired.ip.gatewayWireless: wlan.ip.gateway
	Printer web page:	**View and Modify Printer Settings** > **Network Communications Setup** > **TCP/IP Settings**

Table 6 Network Settings (Continued)

Network Setting	Description	
IP Protocol	This parameter tells if the user (permanent) or the server (dynamic) selects the IP address. When a dynamic option is chosen, this parameter tells the method(s) by which the wired or wireless print server receives the IP address from the server.	
	User menu item: * * This menu item appears only if a wired or wireless print server is installed in your printer.	Main Menu > NETWORK IP PROTOCOL ▼ ALL ▲
	Accepted values:	• ALL • GLEANING ONLY • RARP • BOOTP • DHCP • DHCP & BOOTP • PERMANENT
	Related ZPL command(s):	^ND
	SGD command used:	Wired: internal_wired.ip.protocolWireless: wlan.ip.protocol
	Printer web page:	**View and Modify Printer Settings** > **Network Communications Setup** > **TCP/IP Settings**
Active Print Server	Only one print server (wired or wireless) can be installed at a time. Therefore, the print server installed is the active print server.	

Table 6 Network Settings (Continued)

Network Setting	Description	
	User menu item: * * This menu item appears only if a wired or wireless print server is installed in your printer. It cannot be modified from the control panel.	Main Menu > NETWORK ACTIVE PRINT SERVER WIRED
MAC Address	View the MAC Address View the Media Access Control (MAC) address of the print server that is installed in the printer (wired or wireless).	
	User menu item: * * This menu item appears only if a wired or wireless print server is installed in your printer. It cannot be modified from the control panel.	Main Menu > NETWORK MAC ADDRESS 00:07:4D:41:21:EE
	SGD command used:	Wired: internal_wired.mac_addrWireless: wlan.mac_addr
	Printer web page:	**View and Modify Printer Settings** > **Network Communications Setup** > **Wireless Setup**
ESSID	View the ESSID Value The Extended Service Set Identification (ESSID) is an identifier for your wireless network. This setting, which cannot be modified from the control panel, gives the ESSID for the current wireless configuration.	

Table 6 Network Settings (Continued)

Network Setting	Description	
	User menu item: * * This menu item appears only if a wired or wireless print server is installed in your printer. It cannot be modified from the control panel.	Main Menu > NETWORK ESSID 125
	Accepted values:	32-character alphanumeric string (default 125)
	SGD command used:	wlan.essid
	Printer web page:	**View and Modify Printer Settings** > **Network Communications Setup** > **Wireless Setup**
Reset Network	This option resets the wired or wireless print server. You must reset the print server to allow any changes to the network settings to take effect.	
	User menu item:	Main Menu > NETWORK RESET NETWORK RESET
	Related ZPL command(s):	~WR
	SGD command used:	device.reset
	Printer web page:	**Print Server Settings** > **Factory Print Server Settings**

Language Settings

Table 7 Language Settings

Language Setting	Description	
Language	If necessary, change the language that the printer displays. This change affects the words shown on the following: • the Home menu • the user menus • error messages • the printer configuration label, the network configuration label, and other labels that you can select to print through the user menus	
	User menu item:	Main Menu > SETTINGS Main Menu > LANGUAGE LANGUAGE ▼ ENGLISH ▲ **NOTE:** The selections for this parameter are displayed in the actual languages to make it easier for you to find one that you are able to read.
	Accepted values:	ENGLISH, SPANISH, FRENCH, GERMAN, ITALIAN, NORWEGIAN, PORTUGUESE, SWEDISH, DANISH, SPANISH 2, DUTCH, FINNISH
	Related ZPL command(s):	^KL
	SGD command used:	display.language
	Printer web page:	**View and Modify Printer Settings** > **General Setup** > **Language**
Command Language	Enable this menu item to allow certain ZPL commands to override the printer's current settings.	

Table 7 Language Settings (Continued)

Language Setting	Description	
	User menu item:	Main Menu > LANGUAGE COMMAND LANGUAGE
	Accepted values:	• EPL_ZPL • HYBRID_XML_ZPL • EPL
	SGD command used:	device.languages
Command Character	Set the Format Command Prefix Value The format command prefix is a two-digit hex value used as a parameter place marker in ZPL/ZPL II format instructions. The printer looks for this hex character to indicate the start of a ZPL/ZPL II format instruction. Set the format command character to match what is used in your label formats. **IMPORTANT:** You cannot use the same hex value for the format command prefix, control character, and delimiter characters. The printer must see different characters to work properly. If you are setting the value through the control panel, the printer will skip any value that is already in use.	
	User menu item:	Main Menu > LANGUAGE COMMAND CHAR ^ (5E)
	Accepted values:	00 to FF
	Related ZPL command(s):	^CC or ~CC
	SGD command used:	zpl.caret

Table 7 Language Settings (Continued)

Language Setting	Description	
	Printer web page:	**View and Modify Printer Settings** > **ZPL Control**
Control Character	The printer looks for this two-digit hex character to indicate the start of a ZPL/ZPL II control instruction. Set the control prefix character to match what is used in your label formats.	
	User menu item:	Main Menu > LANGUAGE CONTROL CHAR ▼ ~ (7E) ▲
	Accepted values:	00 to FF
	Related ZPL command(s):	^CT or ~CT
	SGD command used:	zpl.control_character
	Printer web page:	**View and Modify Printer Settings** > **ZPL Control**
Delimiter Character	Set the Delimiter Character Value The delimiter character is a two-digit hex value used as a parameter place marker in ZPL/ZPL II format instructions. Set the delimiter character to match what is used in your label formats.	
	User menu item:	Main Menu > LANGUAGE DELIMITER CHAR ▼ , (2C) ▲
	Accepted values:	00 to FF
	Related ZPL command(s):	^CD or ~CD
	SGD command used:	zpl.delimiter
	Printer web page:	**View and Modify Printer Settings** > **ZPL Control**

Table 7 Language Settings (Continued)

Language Setting	Description	
ZPL Mode	Set the ZPL Mode Select the mode that matches what is used in your label formats. This printer accepts label formats written in either ZPL or ZPL II, eliminating the need to rewrite any ZPL formats that already exist. The printer remains in the selected mode until it is changed in one of the ways listed here.	
	User menu item:	Main Menu > LANGUAGE ZPL MODE ▼ ZPL II ▲
	Accepted values:	• ZPL II • ZPL
	Related ZPL command(s):	^SZ
	SGD command used:	zpl.zpl_mode
	Printer web page:	**View and Modify Printer Settings** > **ZPL Control**

Sensor Settings

Table 8 Sensor Settings

Sensor Setting	Description
Sensor Type	Select the media sensor that is appropriate for the media that you are using. The reflective sensor can be used with all media types. The transmissive sensor should be used only for simple gap media.

Table 8 Sensor Settings (Continued)

Sensor Setting	Description	
	User menu item:	Main Menu > SENSORS SENSOR TYPE ▼ TRANSMISSIVE ▲
	Accepted values:	• TRANSMISSIVE • REFLECTIVE
	Related ZPL command(s):	^JS
	SGD command used:	device.sensor_select
	Printer web page:	**View and Modify Printer Settings** > **Media Setup**
Label Sensor	Set the sensitivity of the label sensor. **IMPORTANT:** This value is set during sensor calibration. Do not change this setting unless you are told to do so by Zebra Technical Support or by an authorized service technician.	
	User menu item:	Main Menu > SENSORS LABEL SENSOR ▼ 197 ▲
	Accepted values:	0 – 255
	SGD command used:	ezpl.label_sensor
	Printer web page:	**View and Modify Printer Settings** > **Calibration**

Table 8 Sensor Settings (Continued)

Sensor Setting	Description	
Take Label	Set the intensity of the take label LED. **IMPORTANT:** This value is set during sensor calibration. Do not change this setting unless you are told to do so by Zebra Technical Support or by an authorized service technician.	
	User menu item:	Main Menu > SENSORS TAKE LABEL ▼ 50 ▲
	Accepted values:	0 – 255
	SGD command used:	ezpl.take_label
	Printer web page:	**View and Modify Printer Settings** > **Calibration**

Port Settings

Table 9 Port Settings

Port Setting	Description
Baud Rate	Select the baud value that matches the one being used by the host computer.

Table 9 Port Settings (Continued)

Port Setting	Description	
	User menu item:	Main Menu > PORTS BAUD RATE ▼ 9600 ▲
	Accepted values:	• 115200 • 57600 • 38400 • 28800 • 19200 • 14400 • 9600 • 4800
	Related ZPL command(s):	^SC
	SGD command used:	comm.baud
	Printer web page:	**View and Modify Printer Settings** > **Serial Communications Setup**
Data Bits	Select the data bits value that matches the one being used by the host computer.	
	User menu item:	Main Menu > PORTS DATA BITS ▼ 8 ▲
	Accepted values:	• 7 or 8

Table 9 Port Settings (Continued)

Port Setting	Description	
	Related ZPL command(s):	^SC
	SGD command used:	comm.data_bits
	Printer web page:	**View and Modify Printer Settings** > **Serial Communications Setup**
Parity	Select the parity value that matches the one being used by the host computer.	
	User menu item:	Main Menu > PORTS PARITY ▼ NONE ▲
	Accepted values:	• NONE • EVEN • ODD
	Related ZPL command(s):	^SC
	SGD command used:	comm.parity
	Printer web page:	**View and Modify Printer Settings** > **Serial Communications Setup**
Host Handshake	Select the handshake protocol that matches the one being used by the host computer.	

Table 9 Port Settings (Continued)

Port Setting	Description	
	User menu item:	Main Menu > PORTS HOST HANDSHAKE ▼ XON/XOFF ▲
	Accepted values:	• XON/XOFF • RTS/CTS • DSR/DTR
	Related ZPL command(s):	^SC
	SGD command used:	comm.handshake
	Printer web page:	**View and Modify Printer Settings** > **Serial Communications Setup**

Calibrating the Ribbon and Media Sensors

Use the procedure in this section to calibrate the printer, which adjusts the sensitivity of the media and ribbon sensors. Calibration assures proper alignment of the image being printed and the optimal print quality.

Perform calibration in the following situations:

- You switched to a different size or type of ribbon or media.
- The printer experiences any of the following issues:
  - skipping labels
  - the printed image is wandering/drifting side-to-side or up-down
  - ribbon is not being detected when it is installed or when it runs out
  - non-continuous labels are being treated as continuous

Performing Auto Calibration

You can set the printer to perform an auto calibration or a short calibration using the POWER UP ACTION or HEAD CLOSE ACTION parameters.

- CALIBRATE—adjusts sensor levels and thresholds, determines the label length, and feeds the media to the next web.

- SHORT CAL—sets the media and web thresholds without adjusting sensor gain, determines the label length, and feeds the media to the next web.

See Power-Up Action or Head-Close Action.

Performing Manual Sensor Calibration

IMPORTANT: Follow the calibration procedure exactly as presented. All of the steps must be performed even if only one of the sensors requires adjustment. You may press and hold **CANCEL** at any step in this procedure to cancel the process.

1. With the printer in the Ready state, initiate media and ribbon calibration in one of these ways:
   - Press and hold **PAUSE** + **CANCEL** for 2 seconds.
   - Send the ezpl.manual_calibration SGD command to the printer. See the Zebra Programming Guide for more information about this command.
   - ZT230 printer only:
     - Navigate to the following menu item on the control panel display. This item is located under the TOOLS menu and the SENSORS menu. See Idle Display, Home Menu, and User Menus on page 15 for information about using the control panel and accessing the menus. See the User Guide for information about using the control panel and accessing the menus.

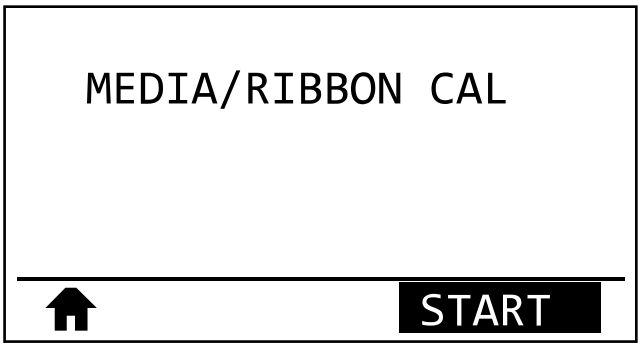

     - Press **RIGHT SELECT** to select **START**.

   The printer does the following:
   - The STATUS light and SUPPLIES light flash yellow once.
   - The PAUSE light blinks yellow.
   - The control panel (ZT230 printer only) displays:

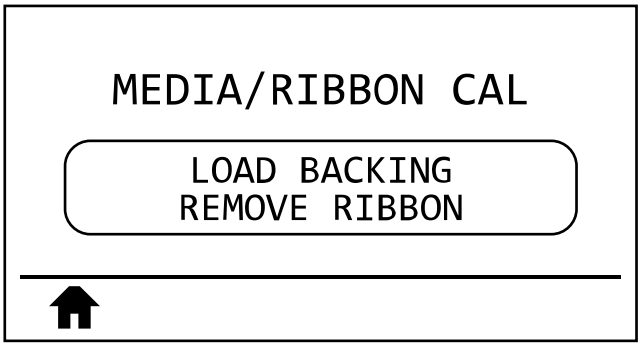

CAUTION: The printhead may be hot and could cause severe burns. Allow the printhead to cool.

2. Open the printhead assembly by rotating the printhead-open lever.

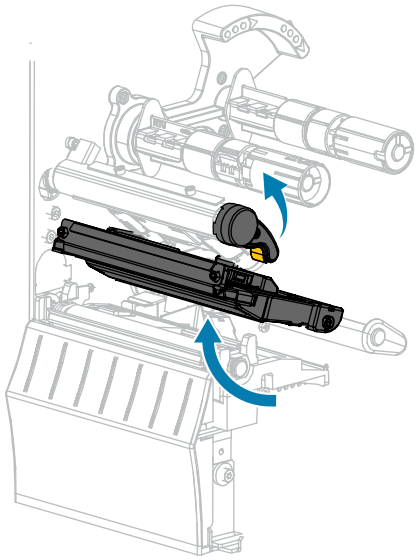

3. Extend the media approximately 8 in. (203 mm) out of the printer.

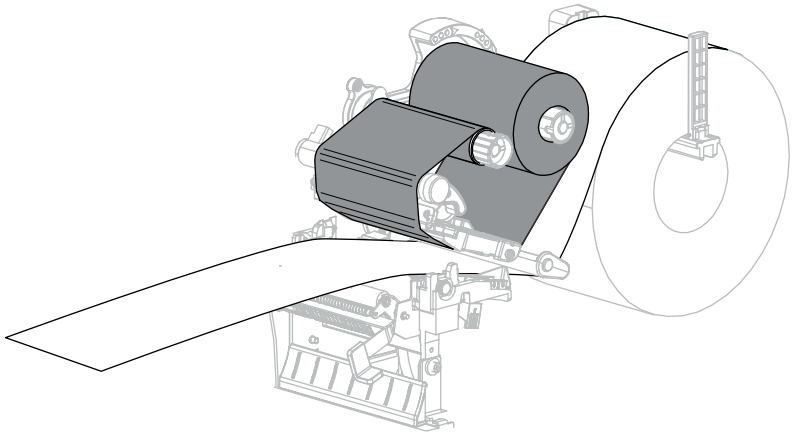

4. Remove the exposed labels so that only the liner remains.

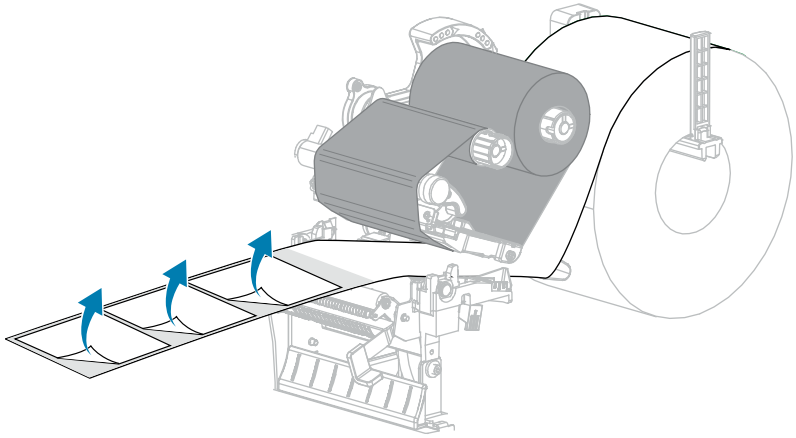

5. Pull the media into the printer so that only the backing is between the media sensors.

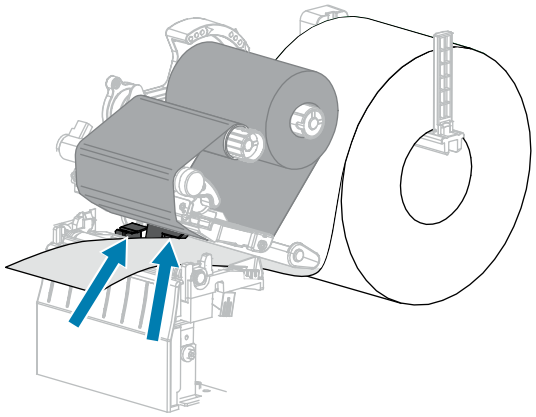

6. Remove the ribbon (if used).
7. Rotate the printhead-open lever downward until it locks the printhead in place.

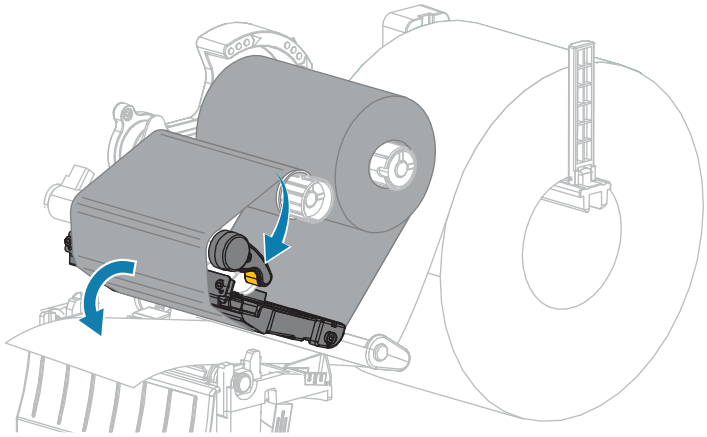

8. Press **PAUSE** to begin the media calibration process.

The following happens:

- The PAUSE light turns off.
- The SUPPLIES light flashes.
- The control panel (ZT230 printer only) displays:

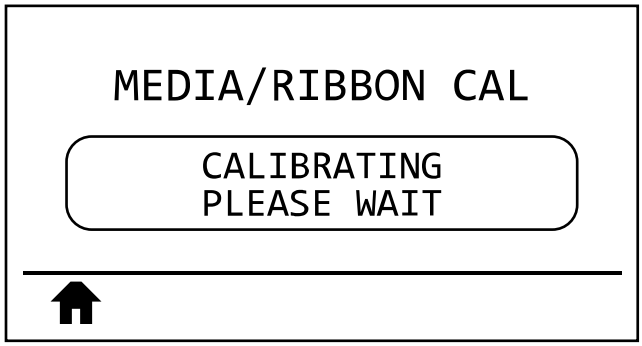

When the process is complete:

- The SUPPLIES light stops flashing.
- The PAUSE light flashes yellow.
- The control panel (ZT230 printer only) displays:

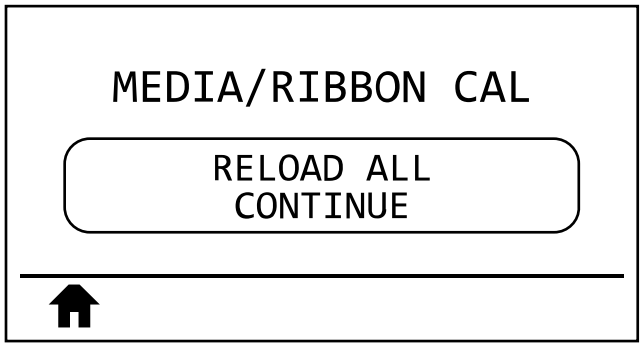

9. Open the printhead assembly by rotating the printhead-open lever.

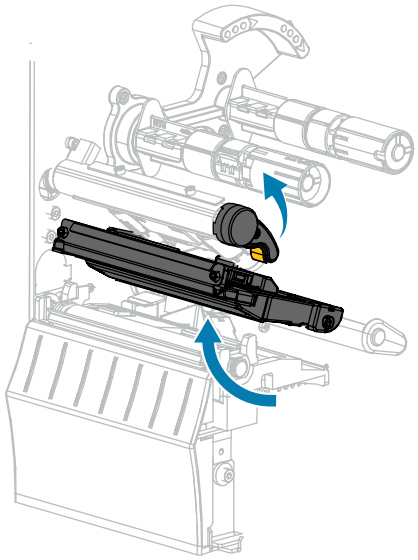

10. Pull the media forward until a label is positioned under the media sensors.

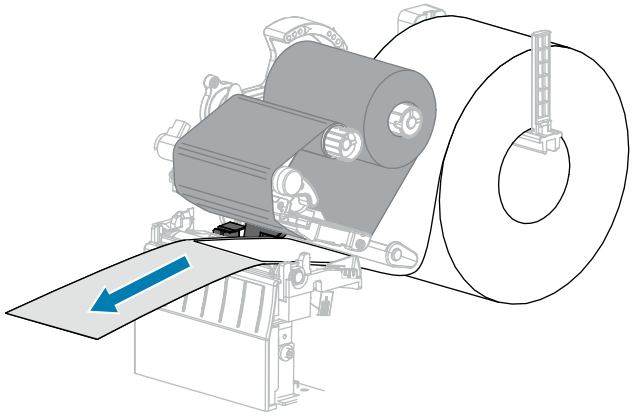

11. Reload the ribbon (if used).

12. Close the printhead.

13. Close the media door.

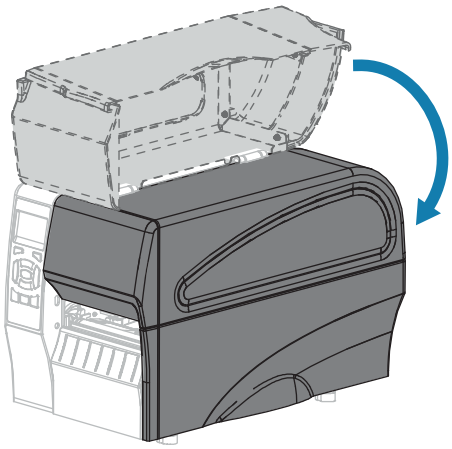

14. Press **PAUSE** to enable printing.
15. Press **FEED** to test if calibration was successful.

    If one label feeds correctly each time, the printer is properly calibrated.

Adjusting the Printhead Pressure

You may need to adjust printhead pressure if printing is too light on one side, if you use thick media, or if the media drifts from side to side during printing. Use the lowest printhead pressure necessary to produce good print quality.

The printhead pressure adjustment dials have setting marks from 1 to 4 in half#mark increments.

Figure 6 Printhead Pressure Adjustment Dials

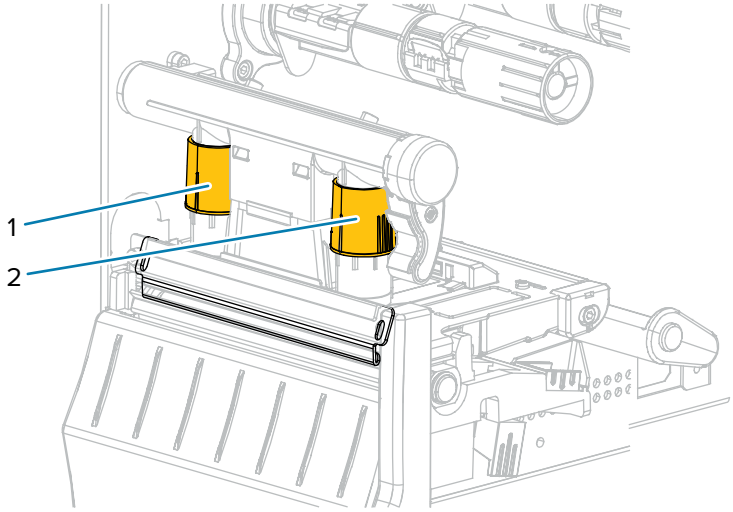

1	Inside dial
2	Outside dial

If necessary, adjust the printhead pressure adjustment dials as follows:

If the Media...	Then...
Requires higher pressure to print well	Increase both dials one position. 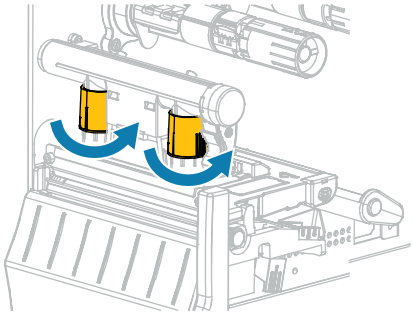
Shifts left while printing	Increase the outside dial setting one position.

If the Media...	Then...
	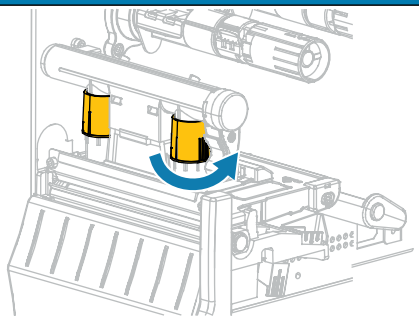 OR Decrease the inside dial setting one position. 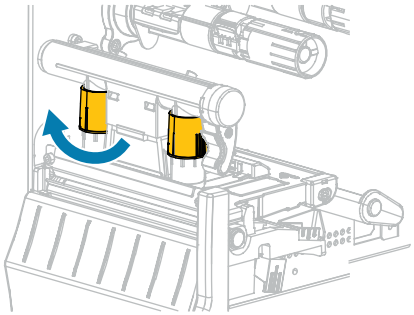
Shifts right while printing	Increase the inside dial setting one position. 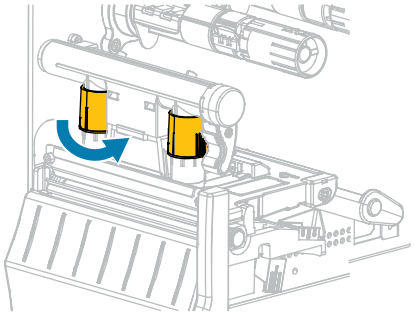 OR Decrease the outside dial setting one position. 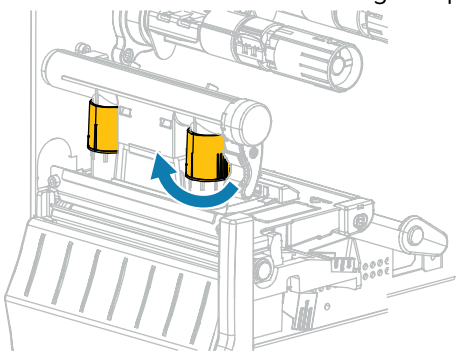

If the Media...	Then...
Prints too lightly on the left side of the label.	Increase the inside dial setting one position. 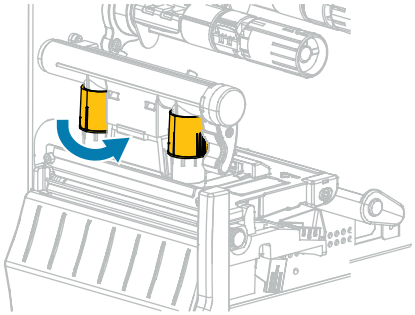
Prints too lightly on the right side of the label.	Increase the outside dial setting one position. 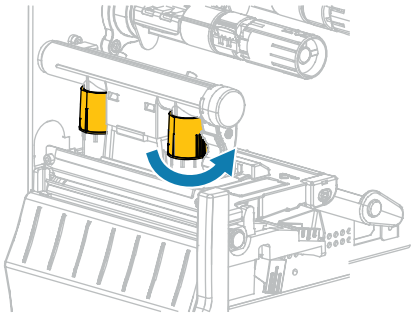

Adjusting Ribbon Tension

For the printer to operate correctly, the ribbon supply spindle and ribbon take-up spindle must use the same tension setting (normal or low tension). Use the normal tension setting seen here for most applications. If you are using narrow ribbon or experience certain ribbon issues, you may need to lower the ribbon tension.

Normal Tension Setting

To place the ribbon spindles in the normal position, firmly pull out each spindle end cap until it extends and clicks in place. Use this setting for most applications.

Figure 7 Normal Tension Setting (Spindle End Caps Pulled Out)

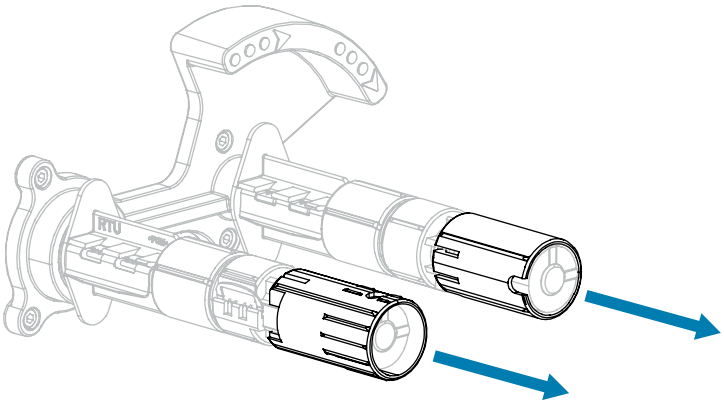

Low Tension Setting

To place a spindle in the low-tension position, firmly push in the end cap until it retracts and clicks in place. Use this setting only when necessary, such as if the ribbon causes scuff marks at the beginning of a roll or if normal tension causes the ribbon to stall at the end of the roll.

Figure 8 Ribbon Spindles— Low Tension Setting (Spindle End Caps Pushed In)

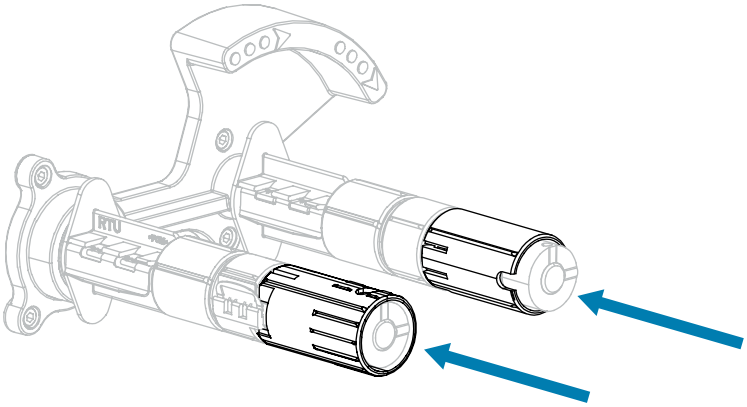

Removing Used Ribbon

Remove used ribbon from the ribbon take-up spindle each time you change the roll of ribbon.

1. Has the ribbon run out?

If...	Then...
Ran out	Continue with the next step.
Did not run out	**a.** Cut or break the ribbon before the ribbon take-up spindle. 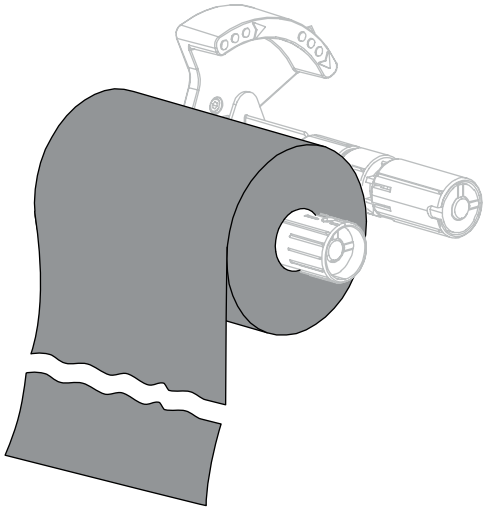 **b.** Continue with the next step.

2. Slide the core with the used ribbon off of the ribbon take-up spindle.

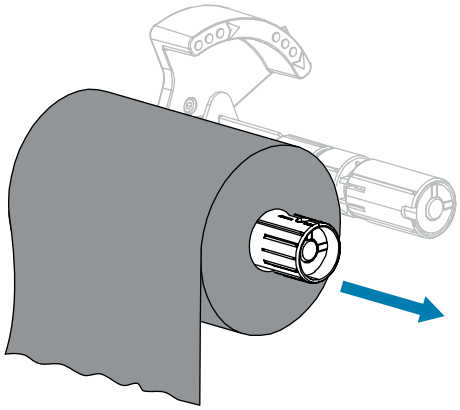

3. Discard the used ribbon. You may reuse the empty core from the ribbon supply spindle by moving it to the ribbon take-up spindle.
4. Reload the ribbon following the instructions in Loading the Ribbon on page 25.

Routine Maintenance

This section provides routine cleaning and maintenance procedures.

Cleaning Schedule and Procedures

Routine preventive maintenance is a crucial part of normal printer operation. By taking good care of your printer, you can minimize the potential problems that you might have with it and help to achieve and to maintain your standards for print quality.

Over time, the movement of media or ribbon across the printhead wears through the protective ceramic coating, exposing and eventually damaging the print elements (dots). To avoid abrasion:

- Clean the printhead frequently.
- Minimize printhead pressure and burn temperature (darkness) settings by optimizing the balance between the two.
- When using Thermal Transfer mode, ensure that the ribbon is as wide or wider than the media to prevent exposing the printhead elements to the more abrasive label material.

IMPORTANT: Zebra is not responsible for damage caused by the use of cleaning fluids on this printer.

Specific cleaning procedures are provided on the following pages. This table shows the recommended cleaning schedule. These intervals are intended as guidelines only. You may have to clean more often, depending upon your application and media.

Table 10 Recommended Cleaning Schedule

Area	Method	Interval
Printhead	Solvent*	Direct Thermal Mode: After every roll of media (or 500 feet of fanfold media). Thermal Transfer Mode: After every roll of ribbon.
Platen roller	Solvent*	
Media sensors	Air blow	
Ribbon sensor	Air blow	
Media path	Solvent*	
Ribbon path	Solvent*	
Pinch roller (part of Peel-Off option)	Solvent*	

Table 10 Recommended Cleaning Schedule (Continued)

Area		Method	Interval
Cutter module	If cutting continuous, pressure-sensitive media	Solvent*	After every roll of media (or more often, depending upon your application and media).
	If cutting tag stock or label liner material	Solvent* and air blow	After every two or three rolls of media.
Tear-off/peel-off bar		Solvent*	Once a month.
Take-label sensor		Air blow	Once every six months.

* Zebra recommends using Preventive Maintenance Kit (part number 47362). In place of this kit, you may use a clean swab dipped in a solution of isopropyl alcohol (minimum 90%) and deionized water (maximum 10%).

Cleaning the Exterior, the Media Compartment, and the Sensors

Over time, dust, grime, and other debris may build up on the outside and inside of your printer, particularly in a harsh operating environment.

Printer Exterior

You may clean the exterior surfaces of the printer with a lint-free cloth and a small amount of a mild detergent, if necessary. Do not use harsh or abrasive cleaning agents or solvents.

IMPORTANT:

Zebra is not responsible for damage caused by the use of cleaning fluids on this printer.

Media Compartment and Sensors

To clean the sensors:

1. Brush, air blow, or vacuum any accumulated paper lint and dust away from the media and ribbon paths.

2. Brush, air blow, or vacuum any accumulated paper lint and dust away from the sensors.

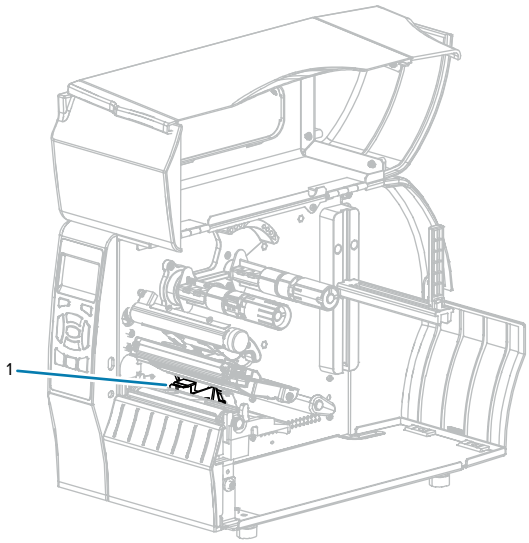

1	Sensors

Cleaning the Printhead and Platen Roller

Inconsistent print quality, such as voids in the bar code or graphics, may indicate a dirty printhead. For the recommended cleaning schedule, see Table 10 Recommended Cleaning Schedule on page 122.

CAUTION: While performing any tasks near an open printhead, remove all rings, watches, hanging necklaces, identification badges, or other metallic objects that could touch the printhead. You are not required to turn off the printer power when working near an open printhead, but Zebra recommends it as a precaution. If you turn off the power, you will lose all temporary settings, such as label formats, and you must reload them before you resume printing.

NOTE: For printers with a peel assembly, keep the peel assembly closed while cleaning the platen roller to reduce the risk of bending the tear#off/peel-off bar.

Figure 9 Location of the Printhead and Platen Roller

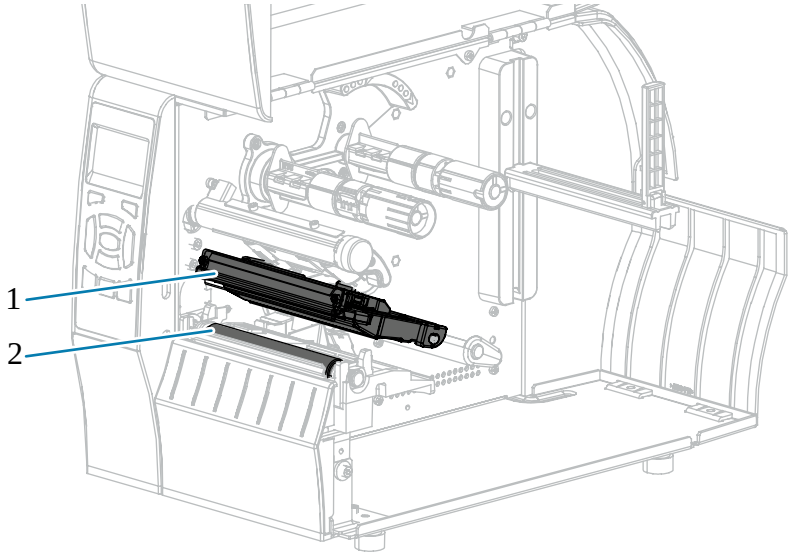

1	Printhead assembly
2	Platen roller

CAUTION: The printhead may be hot and could cause severe burns. Allow the printhead to cool.

CAUTION: Before touching the printhead assembly, discharge any built-up static electricity by touching the metal printer frame or by using an antistatic wriststrap and mat.

1. Raise the media door.

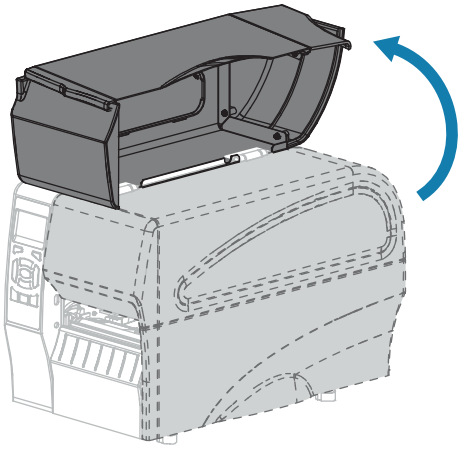

NOTE: The printhead may be hot and could cause severe burns. Allow the printhead to cool.

2. Rotate the printhead-open lever upward to release the printhead assembly.

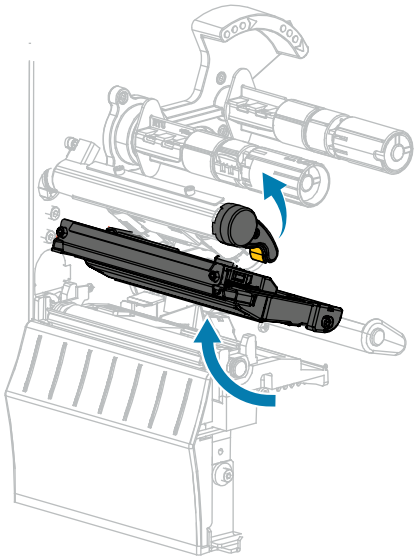

3. Remove the ribbon (if used) and the media.
4. Using the swab from a Zebra Preventive Maintenance Kit, wipe along the brown strip on the printhead assembly from end to end. In place of the Preventive Maintenance Kit, you may use a clean swab dipped in 99.7% isopropyl alcohol. Allow the solvent to evaporate.

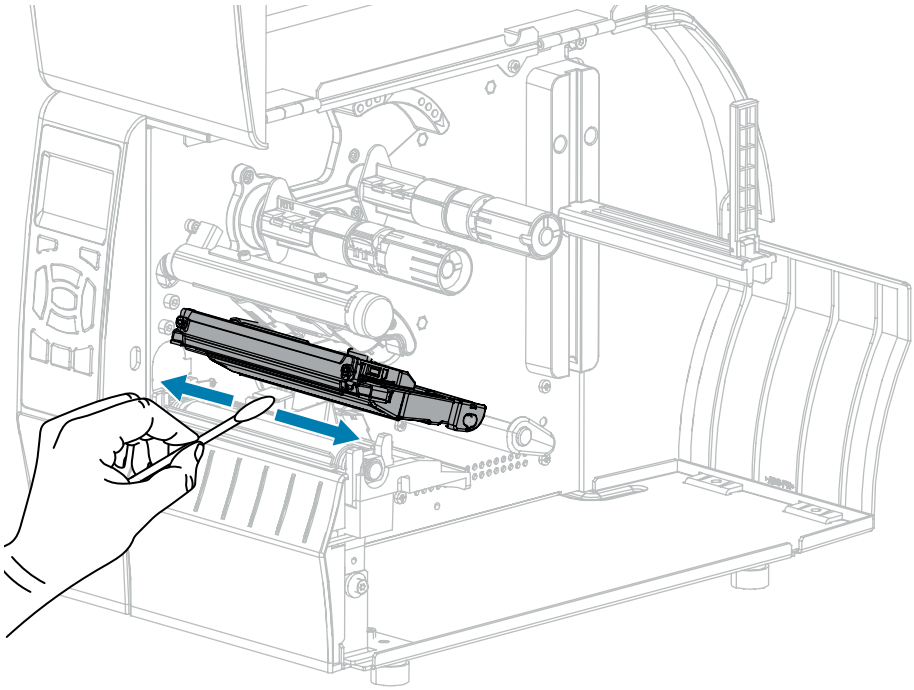

5. While manually rotating the platen roller, clean it thoroughly with the swab. Allow the solvent to evaporate.

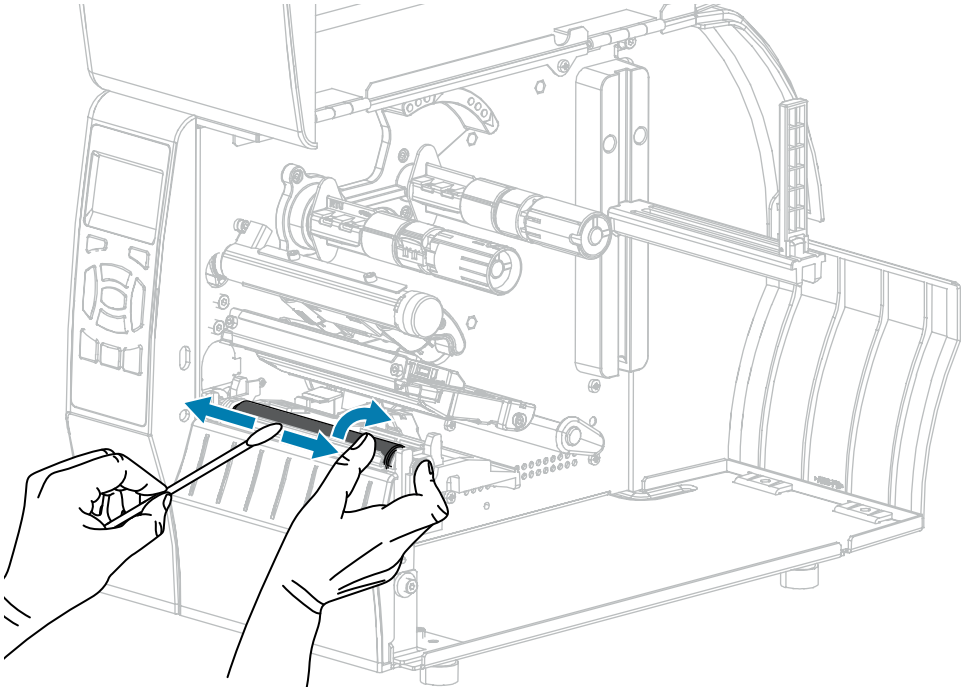

6. Reload the ribbon (if used) and the media. For instructions, see Loading the Ribbon on page 25 or Loading the Media on page 29. Refer to the User Guide for instructions.
7. Rotate the printhead-open lever downward until it locks the printhead in place.

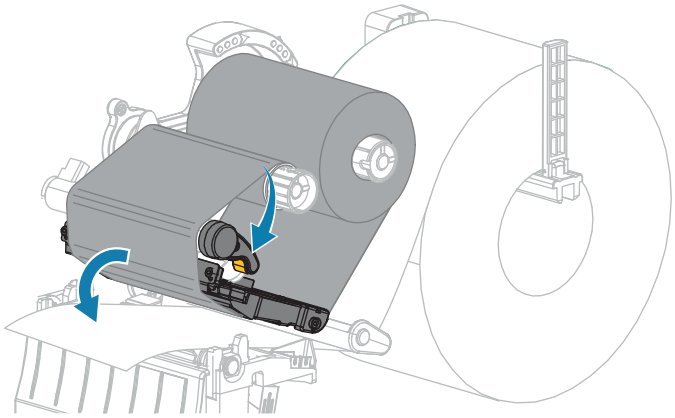

8. Close the media door.

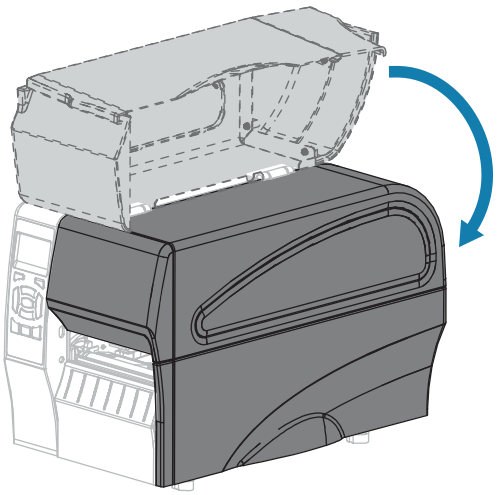

The printer is ready to operate.

9. Press **PAUSE** to exit pause mode and enable printing.

The printer may perform a label calibration or feed a label, depending on your settings.

NOTE: If performing this procedure does not improve print quality, try cleaning the printhead with Save-A-Printhead cleaning film. This specially coated material removes contamination buildup without damaging the printhead. Call your authorized Zebra reseller for more information.

Cleaning the Peel Assembly

The peel assembly, which is part of the Peel-Off and Liner Take-Up options, consists of several spring-loaded rollers to ensure the proper roller pressure. Clean the pinch roller and tear-off/peel-off bar if adhesive buildup begins to affect peel performance.

CAUTION: Do not use your left hand to assist in closing the Peel assembly. The top edge of the Peel roller/assembly could pinch your fingers.

If adhesive buildup affects peel-off performance, complete these steps.

1. Raise the media door.

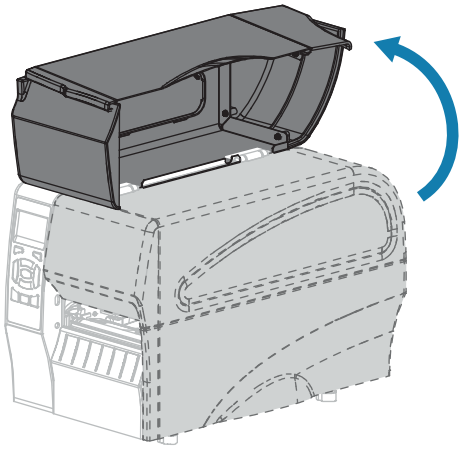

CAUTION: The printhead may be hot and could cause severe burns. Allow the printhead to cool.

2. Open the printhead assembly by rotating the printhead-open lever.

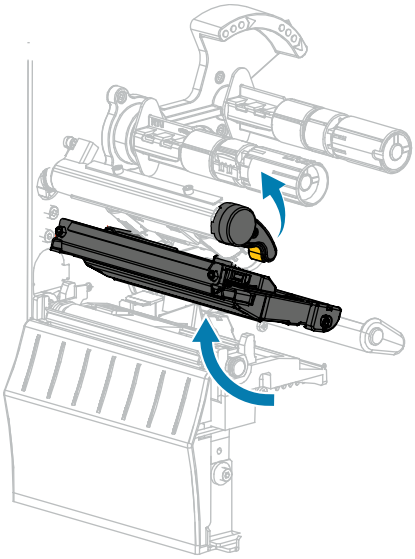

3. Push down the peel-off mechanism release lever to open the peel assembly.

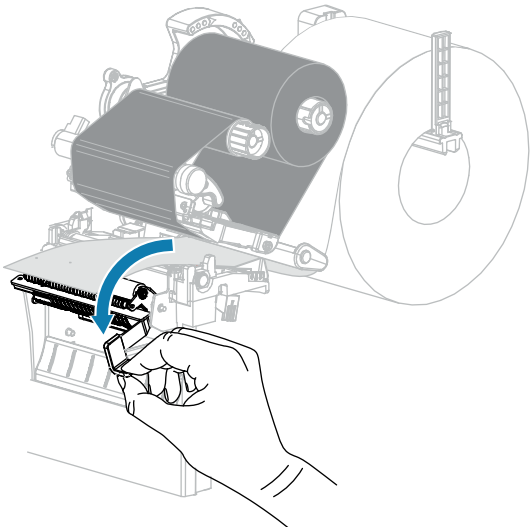

4. Remove any media liner to expose the pinch roller.
5. While manually rotating the pinch roller, clean it thoroughly with the swab from the Preventive Maintenance Kit (part number 47362). In place of the Preventive Maintenance Kit, you may use a clean swab dipped in 99.7% isopropyl alcohol. Allow the solvent to evaporate.

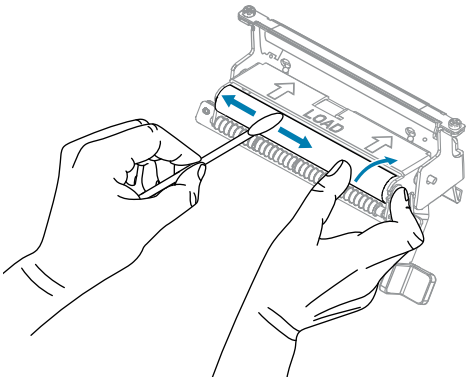

6. Use the swab to remove excess adhesive from the tear-off/peel-off bar. Allow the solvent to evaporate.

IMPORTANT: Apply minimum force when cleaning the tear-off/peel-off bar. Excessive force can cause the tear-off/peel-off bar to bend, which could have a negative effect on peel performance.

7. Reload the media liner through the peel mechanism. For instructions, see Final Steps for Peel-Off Mode (with or without Liner Take-Up) on page 39.

CAUTION: Use the peel release lever and your right hand to close the peel assembly. Do not use your left hand to assist in closing. The top edge of the peel roller/assembly could pinch your fingers.

8. Close the peel assembly using the peel-off mechanism release lever.

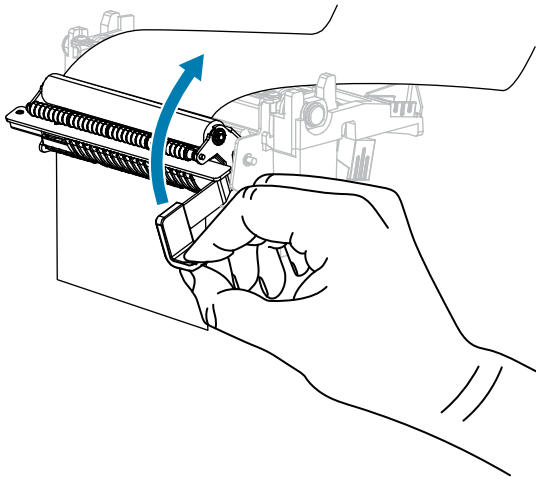

9. Rotate the printhead-open lever downward until it locks the printhead in place.

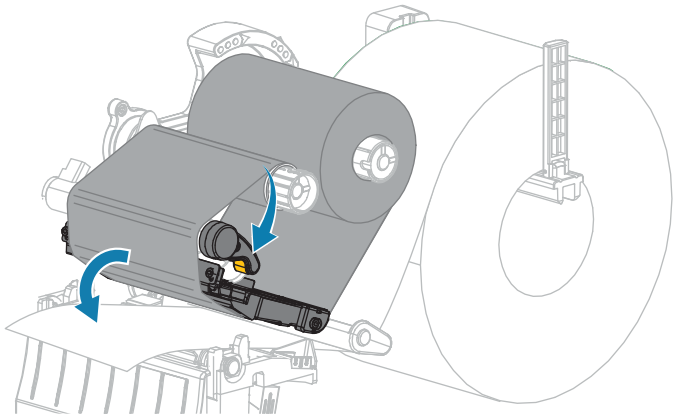

10. Close the media door.

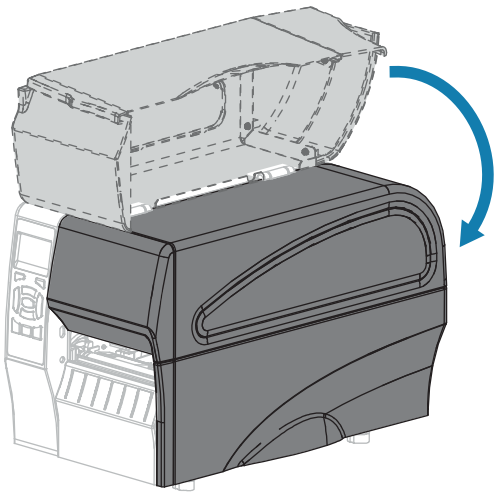

The printer is ready to operate.

11. Press **PAUSE** to exit pause mode and enable printing.

    The printer may perform a label calibration or feed a label, depending on your settings.

Cleaning and Lubricating the Cutter Module

If the cutter is not cutting the labels cleanly or if it jams with labels, clean the cutter.

CAUTION: For personnel safety, always power off and unplug the printer before performing this procedure.

1. Raise the media door.

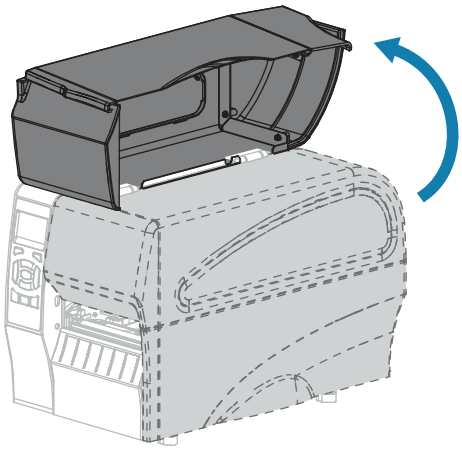

2. Turn off (O) the printer and disconnect the AC power cord.
3. Remove media that is loaded through the cutter module.

4. Loosen and remove the thumbscrew and lock washer on the cutter shield.

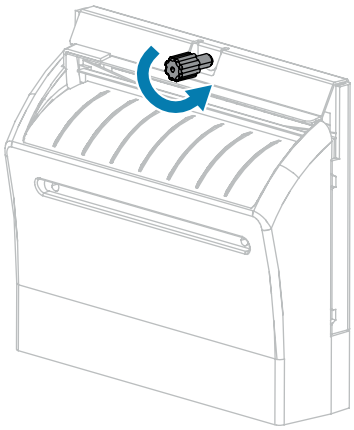

CAUTION: The cutter blade is sharp. Do not touch or rub the blade with your fingers.

5. Remove the cutter shield.

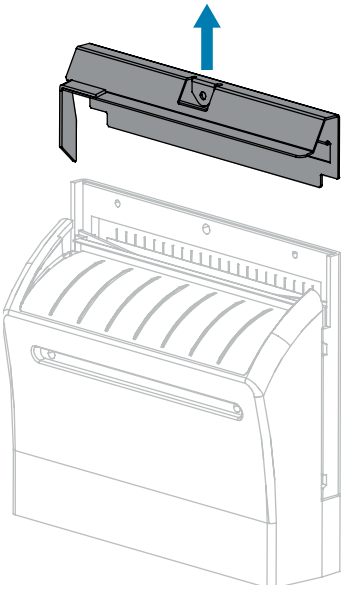

6. If necessary, rotate the cutter motor thumbscrew to fully expose the V-shaped cutter blade.

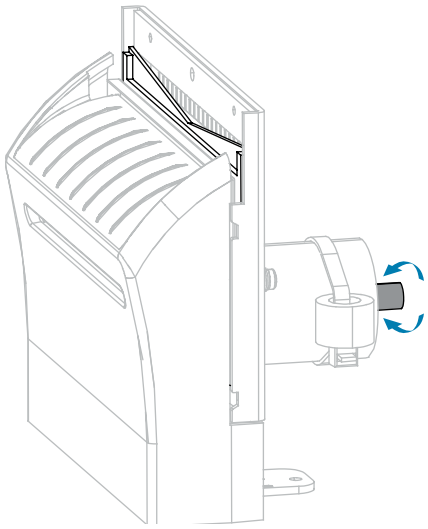

7. Using the swab from the Preventive Maintenance Kit (part number 47362), wipe along the upper cutting surface (1) and the cutter blade (2). In place of the Preventive Maintenance Kit, you may use a clean swab dipped in 90% isopropyl alcohol. Allow the solvent to evaporate.

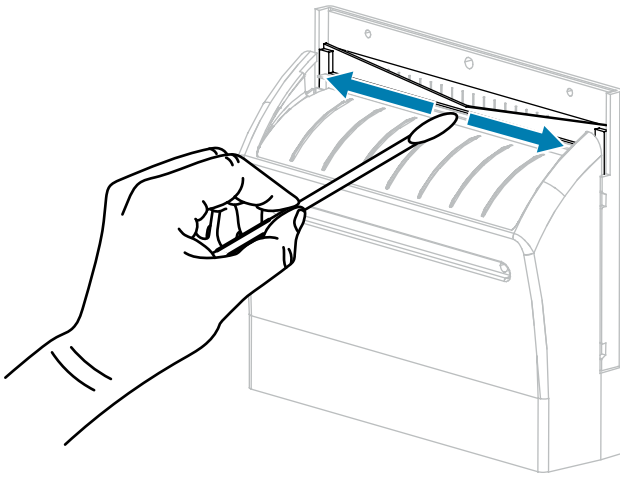

8. When the solvent has evaporated, soak a clean swab in a general-purpose, higher-viscosity silicone or PTFE oil lubricant.

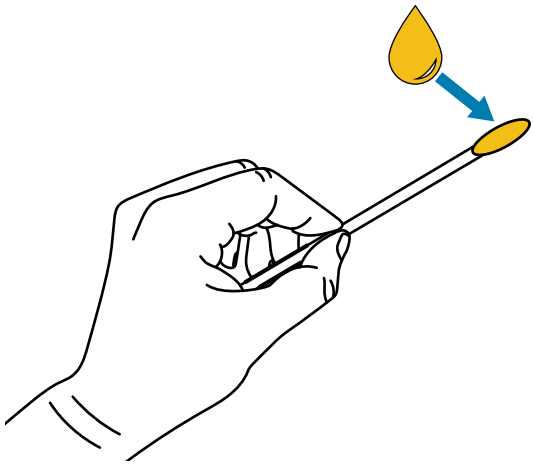

9. Apply an even layer along all exposed surfaces of both cutter blades. Remove any excess oil so that none of it comes in contact with the printhead or platen roller.

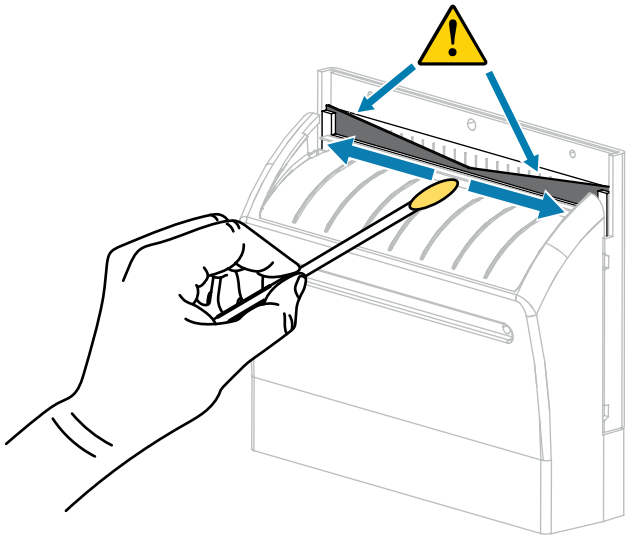

CAUTION: The cutter blade is sharp. For operator safety, replace the cutter shield.

10. Replace the cutter shield and secure it with the thumbscrew and lock washer that you removed earlier.

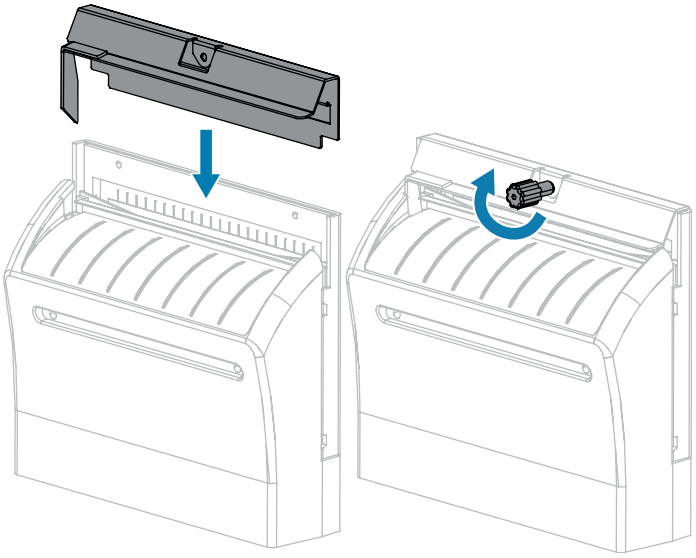

11. Close the media door.

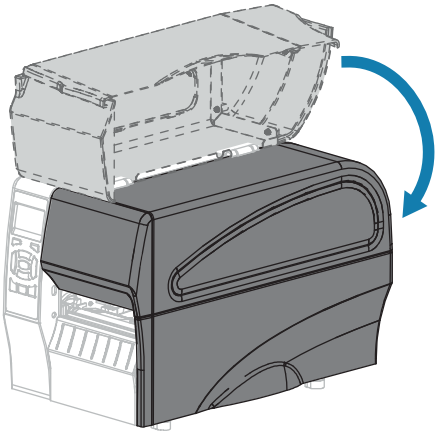

12. Plug the printer into its power source, and then turn on (I) the printer.

    The cutter blade returns to its operating position.

13. If the cutter continues to perform unsatisfactorily, contact an authorized service technician.

Replacing Printer Components

Some printer components, such as the printhead and platen roller, may wear out over time and can be replaced easily. Regular cleaning may extend the life of some of these components.

For more information on recommended cleaning intervals, see Cleaning Schedule and Procedures on page 122.

Ordering Replacement Parts

For optimal printing quality and proper printer performance across our product line, Zebra strongly recommends the use of genuine Zebra supplies as part of the total solution. Specifically, the ZT210, ZT220, and ZT230 printers are designed to work only with genuine Zebra printheads, thus maximizing safety and print quality.

Contact your authorized Zebra reseller for part ordering information.

Recycling Printer Components

The majority of this printer's components are recyclable. The printer's main logic board may include a battery that you should dispose of properly.

Do not dispose of any printer components in unsorted municipal waste. Please dispose of the battery according to your local regulations, and recycle the other printer components according to your local standards. For more information, see www.zebra.com/environment.

Lubrication

The only lubrication needed for this printer is for the cutter module. Follow the instructions in Cleaning and Lubricating the Cutter Module on page 132. Do not lubricate any other parts of the printer.

CAUTION: Some commercially available lubricants will damage the finish and the mechanical parts if used on this printer.

Troubleshooting

This section provides information about errors that you might need to troubleshoot. Assorted diagnostic tests are included.

For videos of some common procedures, go to www.zebra.com/zt200-info.

Meaning of Indicator Lights

The indicator lights on the control panel show the current status of the printer. See, Control Panel on page 9.

Table 11 Status of Printer As Shown by Indicator Lights

Indicator Lights	Status
	STATUS light steady green (other lights steady yellow for 2 seconds during printer power-up). The printer is ready.
	PAUSE light steady yellow. The printer is paused.
	STATUS light steady red SUPPLIES light steady red. The media supply is out. The printer needs attention and cannot continue without user intervention.
	STATUS light steady red SUPPLIES light flashing red. The ribbon supply is out. The printer needs attention and cannot continue without user intervention.
	STATUS light steady yellowSUPPLIES light flashing yellow. The printer is in Direct Thermal mode, which does not require ribbon; however, ribbon is installed in the printer.
	STATUS light steady red PAUSE light steady yellow. The printhead is open. The printer needs attention and cannot continue without user intervention.

Table 11 Status of Printer As Shown by Indicator Lights (Continued)

Indicator Lights	Status
STATUS PAUSE DATA SUPPLIES NETWORK	STATUS light steady yellow. The printhead is over temperature. **CAUTION:** The printhead may be hot and could cause severe burns. Allow the printhead to cool.
STATUS PAUSE DATA SUPPLIES NETWORK	STATUS light flashing yellow. This indicator light flashing indicates one of the following: The printhead is under temperature. The power supply is over temperature. The main logic board (MLB) is over temperature.
STATUS PAUSE DATA SUPPLIES NETWORK	STATUS light steady red PAUSE light steady redDATA light steady red. The printhead was replaced with one that is not a genuine Zebra printhead. Install a genuine Zebra printhead to continue.
STATUS PAUSE DATA SUPPLIES NETWORK	STATUS light flashing red. The printer is unable to read the dpi setting of the printhead.
Printers with a ZebraNet wired Ethernet option	
STATUS PAUSE DATA SUPPLIES NETWORK	NETWORK light offNo Ethernet link is available.
STATUS PAUSE DATA SUPPLIES NETWORK	NETWORK light steady green. A 100Base-T link was found.
STATUS PAUSE DATA SUPPLIES NETWORK	NETWORK light steady yellow. A 10Base-T link was found.
STATUS PAUSE DATA SUPPLIES NETWORK	NETWORK light steady red. An Ethernet error condition exists. The printer is not connected to your network.
Printers with a ZebraNet wireless option	
STATUS PAUSE DATA SUPPLIES NETWORK STATUS PAUSE DATA SUPPLIES NETWORK STATUS PAUSE DATA SUPPLIES NETWORK	NETWORK light offA radio was found during power-up. The printer is attempting to associate with the network. The light flashes red while the printer associates with the network. The light then flashes yellow while the printer is authenticating with the network.
STATUS PAUSE DATA SUPPLIES NETWORK	NETWORK light steady green. The radio is associated with your network and authenticated, and the WLAN signal is strong.

Table 11 Status of Printer As Shown by Indicator Lights (Continued)

Indicator Lights	Status
STATUS PAUSE DATA SUPPLIES NETWORK	NETWORK light flashing green. WLAN—The radio is associated with your network and authenticated, but the WLAN signal is weak.
STATUS PAUSE DATA SUPPLIES NETWORK	NETWORK light steady red. A WLAN error condition exists. The printer is not connected to your network.

Printing Issues

This table identifies possible issues with printing or print quality, the possible causes, and the recommended solutions.

Table 12 Printing Issues

Issue	Possible Cause	Recommended Solution
General print quality issues	The printer is set at the incorrect print speed.	For optimal print quality, set the print speed to the lowest possible setting for your application via control panel, the driver, or the software. You may want to perform the Feed Self Test to determine the optimal settings for your printer. See Print Speed for how to change the print speed.
	You are using an incorrect combination of labels and ribbon for your application.	Switch to a different type of media or ribbon to try to find a compatible combination.If necessary, consult your authorized Zebra reseller or distributor for information and advice.
	The printer is set at an incorrect darkness level.	For optimal print quality, set the darkness to the lowest possible setting for your application. You may want to perform the Feed Self Test to determine the ideal darkness setting. See Print Darkness for how to change the darkness setting.
	The printhead is dirty.	Clean the printhead and platen roller. See Clean the Printhead and Platen Roller.
	Incorrect or uneven printhead pressure.	Set the printhead pressure to the minimum needed for good print quality. See Adjust the Printhead Pressure.

Table 12 Printing Issues (Continued)

Issue	Possible Cause	Recommended Solution
Loss of printing registration on labels. Excessive vertical drift in top-of-form registration.	The platen roller is dirty.	Clean the printhead and platen roller. See Clean the printhead and platen roller.
	Media guides are positioned improperly.	Ensure that the media guides are properly positioned. See Load the Media.
	The media type is set incorrectly.	Set the printer for the correct media type (gap/notch, continuous, or mark). See Media Type.
	The media is loaded incorrectly.	Load media correctly. See Load the Media.
Long tracks of missing print on several labels	Print element damaged.	Call a service technician.
	Wrinkled ribbon.	See wrinkled ribbon causes and solutions in Ribbon Problems.
Fine, angular gray lines on blank labels	Wrinkled ribbon.	See wrinkled ribbon causes and solutions in Ribbon Problems.
Printing too light or too dark over the entire label	The media or ribbon is not designed for high#speed operation.	Replace supplies with those recommended for high-speed operation.
	You are using an incorrect combination of media and ribbon for your application.	Switch to a different type of media or ribbon to try to find a compatible combination.If necessary, consult your authorized Zebra reseller or distributor for information and advice.
	You are using ribbon with direct thermal media.	Direct thermal media does not require ribbon. To determine if you are using direct thermal media, perform the label scratch test in When to Use Ribbon on page 19.
	Incorrect or uneven printhead pressure.	Set the printhead pressure to the minimum needed for good print quality. See Adjusting the Printhead Pressure on page 117.
Smudge marks on labels	The media or ribbon is not designed for high#speed operation.	Replace supplies with those recommended for high-speed operation.
Misregistration/skips labels	The printer is not calibrated.	Calibrate the printer. See Calibrating the Ribbon and Media Sensors on page 111.
	Improper label format.	Check your label format and correct it as necessary.
Misregistration and misprint of one to three labels	The platen roller is dirty.	Clean the printhead and platen roller. See Cleaning the Printhead and Platen Roller on page 124.
	Media does not meet specifications.	Use media that meets specifications. See Media Specifications on page 165.

Table 12 Printing Issues (Continued)

Issue	Possible Cause	Recommended Solution
Vertical drift in top#of-form position	The printer is out of calibration.	Calibrate the printer. See Calibrating the Ribbon and Media Sensors on page 111.
	The platen roller is dirty.	Clean the printhead and platen roller. See Cleaning the Printhead and Platen Roller on page 124.
Vertical image or label drift	The printer is using non#continuous labels but is configured in continuous mode.	Set the printer for the correct media type (gap/notch, continuous, or mark—see Media Type) and calibrate the printer, if necessary (see Calibrating the Ribbon and Media Sensors on page 111).
	The media sensor is calibrated improperly.	Calibrate the printer. See Calibrating the Ribbon and Media Sensors on page 111.
	The platen roller is dirty.	Clean the printhead and platen roller. See Cleaning the Printhead and Platen Roller on page 124.
	Improper printhead pressure settings (toggles). a	Adjust the printhead pressure to ensure proper functionality. See Adjusting the Printhead Pressure on page 117.
	The media or ribbon is loaded incorrectly.	Ensure that the media and ribbon are loaded correctly. See Loading the Ribbon on page 25 and Loading the Media on page 29.
	Incompatible media.	You must use media that meets the printer specifications. Ensure that the interlabel gaps or notches are 2 to 4 mm and consistently placed (see Media Specifications on page 165).
The bar code printed on a label does not scan.	The bar code is not within specifications because the print is too light or too dark.	Perform the FEED Self Test on page 153. Adjust the darkness or print speed settings as necessary.
	There is not enough blank space around the bar code.	Leave at least 1/8 in. (3.2 mm) between the bar code and other printed areas on the label and between the bar code and the edge of the label.
Auto Calibrate failed.	The media or ribbon is loaded incorrectly.	Ensure that the media and ribbon are loaded correctly. See Loading the Ribbon on page 25 and Loading the Media on page 29.
	The sensors could not detect the media or ribbon.	Calibrate the printer. See Calibrating the Ribbon and Media Sensors on page 111.
	The sensors are dirty or positioned improperly.	Ensure that the sensors are clean and properly positioned.

Table 12 Printing Issues (Continued)

Issue	Possible Cause	Recommended Solution
	The media type is set incorrectly.	Set the printer for the correct media type (gap/notch, continuous, or mark). See Media Type.

Ribbon Problems

This table identifies problems that may occur with ribbon, the possible causes, and the recommended solutions.

For videos of some common procedures, go to www.zebra.com/zt200-info.

Table 13 Ribbon Problems

Problem	Possible Cause	Recommended Solution
Broken or melted ribbon	Darkness setting too high.	Reduce the darkness setting. See Print Darkness for how to change the darkness setting. Clean the printhead thoroughly. See Cleaning the Printhead and Platen Roller on page 124.
	The ribbon is coated on the wrong side and cannot be used in this printer.	Replace the ribbon with one coated on the correct side. For more information, see Coated Side of Ribbon on page 19.
Ribbon slips or does not advance correctly	Ribbon tension is set incorrectly.	Change the tension settings on the ribbon spindles. See Adjusting Ribbon Tension on page 119.
Wrinkled ribbon	Ribbon was loaded incorrectly.	Load the ribbon correctly. See Loading the Ribbon on page 25.
	Incorrect burn temperature.	For optimal print quality, set the darkness to the lowest possible setting for your application. You may want to perform the FEED Self Test on page 153 to determine the ideal darkness setting. See Print Darkness for how to change the darkness setting.
	Incorrect or uneven printhead pressure.	Set the printhead pressure to the minimum needed for good print quality. See Adjusting the Printhead Pressure on page 117.
	Media not feeding properly; “walking” from side to side.	Make sure that media is snug by adjusting the media guide, or call a service technician.

Table 13 Ribbon Problems (Continued)

Problem	Possible Cause	Recommended Solution
	The printhead or platen roller may be installed incorrectly.	Call a service technician.
The printer does not detect when the ribbon runs out.	The printer may have been calibrated without ribbon or without the ribbon loaded properly.	Make sure that ribbon is loaded correctly so that it can be detected by the ribbon sensor. Under the printhead, the ribbon should track all the way back, near the printer's firewall. See Loading the Ribbon on page 25. Make sure that ribbon is loaded correctly so that it can be detected by the ribbon sensor. Under the printhead, the ribbon should track all the way back, near the printer's firewall. Refer to the User Guide for instructions for loading ribbon. Calibrate the printer. See Calibrating the Ribbon and Media Sensors on page 111.
In thermal transfer mode, the printer did not detect the ribbon even though it is loaded correctly.		
The printer indicates that ribbon is out, even though ribbon is loaded correctly.	The printer was not calibrated for the label and ribbon being used.	Calibrate the printer. See Calibrating the Ribbon and Media Sensors on page 111.

Error Messages

The ZT230 control panel displays messages when there is an error. See Table 14 Error Messages on page 145 for errors, the possible causes, and the recommended solutions.

QuickHelp Pages

Most error messages will include the option to view a QuickHelp page. The lower right-hand corner of the message displays QR.

To access a QuickHelp page from an error message:

1. Press **RIGHT SELECT** to select **QR**.

   The printer displays a QuickHelp page specific to that error message. This page includes a QR code, such as this.

2. Scan the QR code with a smartphone.

   Your phone accesses either a video specific to that error message or the Zebra support page for your printer.

Error Message Lookup

Review the display or indicator lights, review the possible causes, and implement a recommended solution.

Table 14 Error Messages

Display/Indicator Lights	Possible Cause	Recommended Solution
HEAD OPEN **CLOSE HEAD** STATUS light steady red PAUSE light steady yellow	The printhead is not fully closed.	Close the printhead completely.
	The printhead open sensor is not working properly.	Call a service technician to replace the sensor.
MEDIA OUT **LOAD MEDIA** STATUS light steady red SUPPLIES light steady red	The media is not loaded or is loaded incorrectly.	Load media correctly.
	Misaligned media sensor.	Check the position of the media sensor.
	The printer is set for noncontinuous media, but continuous media is loaded.	Install the proper media type, or reset printer for the current media type. Calibrate the printer. See Media and Ribbon Sensor Calibration.
WARNING **RIBBON IN** STATUS light steady yellow SUPPLIES light flashing yellow	Ribbon is loaded, but the printer is set for direct thermal mode.	Ribbon is not required with direct thermal media. If you are using direct thermal media, remove the ribbon. This error message will not affect printing.
		If you are using thermal transfer media, which requires ribbon, set the printer for Thermal Transfer mode. See Thermal Transfer.
ALERT **RIBBON OUT** STATUS light steady red SUPPLIES light flashing yellow	In thermal transfer mode: • ribbon is not loaded • ribbon is loaded incorrectly • the ribbon sensor is not detecting ribbon • media is blocking the ribbon sensor	Load ribbon correctly. See Load the Ribbon.Calibrate the printer. See Media and Ribbon Sensor Calibration.

Table 14 Error Messages (Continued)

Display/Indicator Lights	Possible Cause	Recommended Solution
	In thermal transfer mode, the printer did not detect the ribbon even though it is loaded correctly.	Print a sensor profile (see Print Information). The ribbon out threshold (2) is likely too high, above the line that indicates where the ribbon is detected (1). 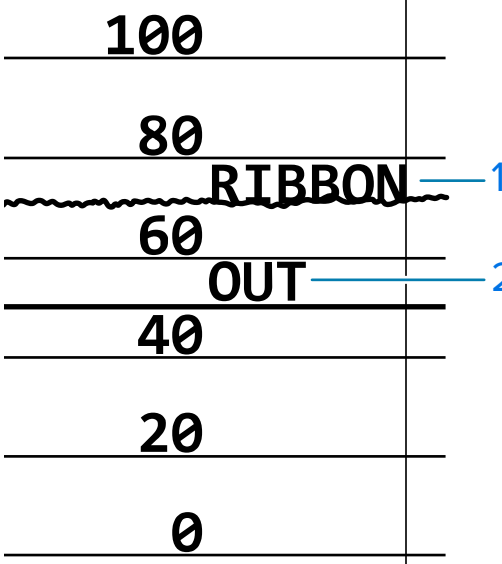 Calibrate the printer (see Media and Ribbon Sensor Calibration) or load printer defaults (see Load Defaults).
	If you are using direct thermal media, the printer is waiting for ribbon to be loaded because it is incorrectly set for thermal transfer mode.	Set the printer for Direct Thermal mode.
PH NOT AUTHENTICATED REPLACE PRINT HEAD STATUS light steady red PAUSE light steady red DATA light steady red	The printhead was replaced with one that is not a genuine Zebra printhead.	Install a genuine Zebra printhead.

Table 14 Error Messages (Continued)

Display/Indicator Lights	Possible Cause	Recommended Solution
PRINT HEAD OVERTEMP PRINTING HALTED STATUS light steady yellow	The printhead is over temperature.	Allow the printer to cool. Printing automatically resumes when the printhead elements cool to an acceptable operating temperature. If this error persists, consider changing where the printer is located or using a slower print speed.
HEAD COLD PRINTING HALTED THERMISTOR REPLACE PRINTHEAD STATUS light steady yellow The printer shows one of these messages or cycles between them.	**CAUTION:** An improperly connected printhead data or power cable can cause these error messages. The printhead may be hot enough to cause severe burns. Allow the printhead to cool.	
	The printhead data cable is not properly connected.	Call a service technician to hook up the printhead properly.
	The printhead has a faulty thermistor.	Call a service technician to replace the printhead.
HEAD COLD PRINTING HALTED STATUS light flashing yellow	**CAUTION:** An improperly connected printhead data or power cable can cause this error message. The printhead may be hot enough to cause severe burns. Allow the printhead to cool.	
	The printhead temperature is approaching its lower operating limit.	Continue printing while the printhead reaches the correct operating temperature. If the error remains, the environment may be too cold for proper printing. Relocate the printer to a warmer area.
	The printhead data cable is not properly connected.	Call a service technician to hook up the printhead properly.
	The printhead has a faulty thermistor.	Call a service technician to replace the printhead.

Table 14 Error Messages (Continued)

Display/Indicator Lights	Possible Cause	Recommended Solution
CUT ERROR STATUS light steady red PAUSE light steady yellow	**CAUTION:** The cutter blade is sharp. Do not touch or rub the blade with your fingers.	
	The cutter blade is in the media path.	Turn off the printer power and unplug the printer. Inspect the cutter module for debris and clean as needed following the cleaning instructions in Cleaning and Lubricating the Cutter Module on page 132.
OUT OF MEMORY STORING GRAPHIC OUT OF MEMORY STORING FORMAT OUT OF MEMORY STORING BITMAP HEAD COLD PRINTING FONT	There is not enough memory to perform the function specified on the second line of the error message.	Free up some of the printer's memory by adjusting the label format or printer parameters. One way to free up memory is to adjust the print width to the actual width of the label instead of leaving the print width set to the default. See Print Width.
		Ensure that the data is not directed to a device that is not installed or is unavailable.
		If the problem persists, call a service technician.

Communications Problems

This table identifies problems with communications, the possible causes, and the recommended solutions.

Table 15 Communications Problems

Problem	Possible Cause	Recommended Solution
A label format was sent to the printer but was not recognized. The DATA light does not flash.	The communication parameters are incorrect.	Check the printer driver or software communications settings (if applicable).
		If you are using serial communication, check the serial port settings. See Port Settings on page 108.
		If you are using serial communication, make sure that you are using a null modem cable or a null modem adapter.

Table 15 Communications Problems (Continued)

Problem	Possible Cause	Recommended Solution
		Check the printer's handshake protocol setting. The setting used must match the one being used by the host computer. See Host Handshake.
		If a driver is used, check the driver communication settings for your connection.
A label format was sent to the printer. Several labels print, then the printer skips, misplaces, misses, or distorts the image on the label.	The serial communication settings are incorrect.	Ensure that the flow control settings match.
		Check the communication cable length. See General Specifications on page 160 for requirements.
		Check the printer driver or software communications settings (if applicable).
A label format was sent to the printer but was not recognized. The DATA light flashes but no printing occurs.	The prefix and delimiter characters set in the printer do not match the ones in the label format.	Verify the prefix and delimiter characters. See Control Character and Delimiter Character.
	Incorrect data is being sent to the printer.	Check the communication settings on the computer. Ensure that they match the printer settings.
		If the problem continues, check the label format.

Miscellaneous Issues

This table identifies miscellaneous issues with the printer, the possible causes, and the recommended solutions.

For videos of some common procedures, go to www.zebra.com/zt200-info.

Table 16 Miscellaneous Printer Problems

Problem	Possible Cause	Recommended Solution
The control panel display shows a language that I cannot read	The language parameter was changed through the control panel or a firmware command.	**1.** On the control panel display, scroll to LANGUAGE Menu. **2.** Press **OK** to access the items in this menu. **3.** Use the **UP ARROW** or **DOWN ARROW** to scroll through the language selections. The selections for this parameter are displayed in the actual languages to make it easier for you to find one that you are able to read. **4.** Select the language that you want to display.
The display is missing characters or parts of characters	The display may need replacing.	Call a service technician.
Changes in parameter settings did not take effect	Some parameters are set incorrectly.	**1.** Check the parameters and change or reset if necessary. **2.** Turn the printer off (O) and then on (I).
	A firmware command turned off the ability to change the parameter.	Refer to the Programming Guide for ZPL, ZBI, Set#Get#Do, Mirror, and WML or call a service technician.
	A firmware command changed the parameter back to the previous setting.	
	If the problem persists, there may be a problem with the main logic board.	Call a service technician.
Non-continuous labels are being treated as continuous labels.	The printer was not calibrated for the media being used.	Calibrate the printer. See Calibrating the Ribbon and Media Sensors on page 111.
	The printer is configured for continuous media.	Set the printer for the correct media type (gap/notch, continuous, or mark). See Media Type.
All indicator lights are on, nothing is on the display (if the printer has a display), and the printer locks up.	Internal electronic or firmware failure.	Call a service technician.
The printer locks up while running the Power#On Self Test.	Main logic board failure.	Call a service technician.

Printer Diagnostics

Self tests and other diagnostics provide specific information about the condition of the printer. The self tests produce sample printouts and provide specific information that helps determine the operating conditions for the printer.

IMPORTANT: Use full-width media when performing self tests. If your media is not wide enough, the test labels may print on the platen roller. To prevent this from happening, check the print width, and ensure that the width is correct for the media that you are using.

Each self test is enabled by pressing a specific control panel key or combination of keys while turning on (I) the printer power. Keep the key(s) pressed until the first indicator light turns off. The selected self test automatically starts at the end of the Power-On Self Test.

NOTE:

- When performing these self tests, do not send data to the printer from the host.
- If your media is shorter than the label to be printed, the test label continues on the next label.
- When canceling a self test prior to its actual completion, always reset the printer by turning it off (O)

Power-On Self Test

A Power-On Self Test (POST) is performed each time the printer is turned on (I). During this test, the control panel lights (LEDs) turn on and off to ensure proper operation. At the end of this self test, only the STATUS LED remains lit. When the Power-On Self Test is complete, the media is advanced to the proper position.

- Turn on (I) the printer.

  The POWER LED illuminates. The other control panel LEDs and the LCD monitor the progress and indicate the results of the individual tests. All messages during the POST display in English; however, if the test fails, the resulting messages cycle through the international languages as well.

CANCEL Self Test

The CANCEL self test prints a printer configuration label and a network configuration label. For other ways to print these labels, see Print Information.

1. Turn off (O) the printer.

2. Press and hold **CANCEL** while turning on (I) the printer. Hold **CANCEL** until the first control panel light turns off.

   The printer prints a printer configuration label and then a network configuration label as shown in these examples.

Figure 10 Sample Printer Configuration Label

Figure 11 Sample Network Configuration Label

PAUSE Self Test

This self test can be used to provide the test labels required when making adjustments to the printer's mechanical assemblies or to determine if any printhead elements are not working.

1. Turn off (O) the printer.

2. Press and hold **PAUSE** while turning on (I) the printer. Hold **PAUSE** until the first control panel light turns off.
   - The initial self test prints 15 labels at the printer's slowest speed, and then automatically pauses the printer. Each time **PAUSE** is pressed, an additional 15 labels print. A sample of the labels is shown here.

     Figure 12 PAUSE Test Label

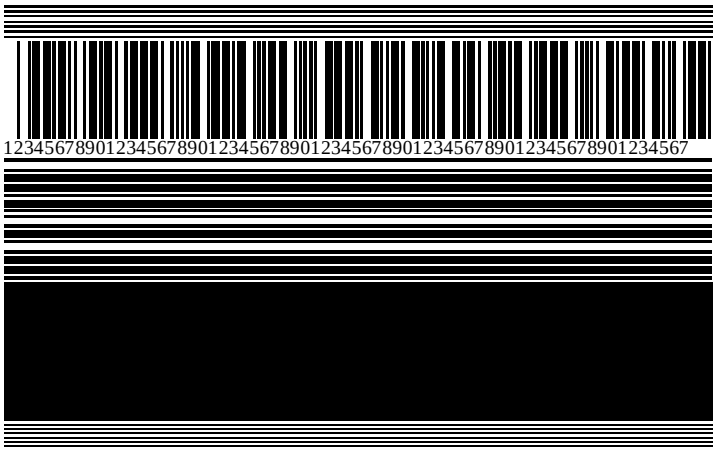

   - While the printer is paused, pressing **CANCEL** alters the self test. Each time PAUSE is pressed, 15 labels print at 6 in. (152 mm) per second.
   - While the printer is paused, pressing **CANCEL** again alters the self test a second time. Each time PAUSE is pressed, 50 labels print at the printer's slowest speed
   - While the printer is paused, pressing **CANCEL** again alters the self test a third time. Each time PAUSE is pressed, 50 labels print at 6 in. (152 mm) per second.
   - While the printer is paused, pressing **CANCEL** again alters the self test a fourth time. Each time PAUSE is pressed, 15 labels print at the printer's maximum speed.
3. To exit this self test at any time, press and hold **CANCEL**.

FEED Self Test

Different types of media may require different darkness settings. This section contains a simple but effective method for determining the ideal darkness for printing bar codes that are within specifications.

During the FEED self test, labels are printed at different darkness settings at two different print speeds. The relative darkness and the print speed are printed on each label. The bar codes on these labels may be ANSI-graded to check print quality.

During this test, one set of labels is printed at 2 ips, and another set is printed at 6 ips. The darkness value starts at three settings lower than the printer's current darkness value (relative darkness of –3) and increase until the darkness is three settings higher than the current darkness value (relative darkness of +3).

1. Print a configuration label to show the printer's current settings.
2. Turn off (O) the printer.

3. Press and hold **FEED** while turning on (I) the printer. Hold **FEED** until the first control panel light turns off.

   The printer prints a series of labels at various speeds and at darkness settings higher and lower than the darkness value shown on the configuration label.

   Figure 13 FEED Test Label

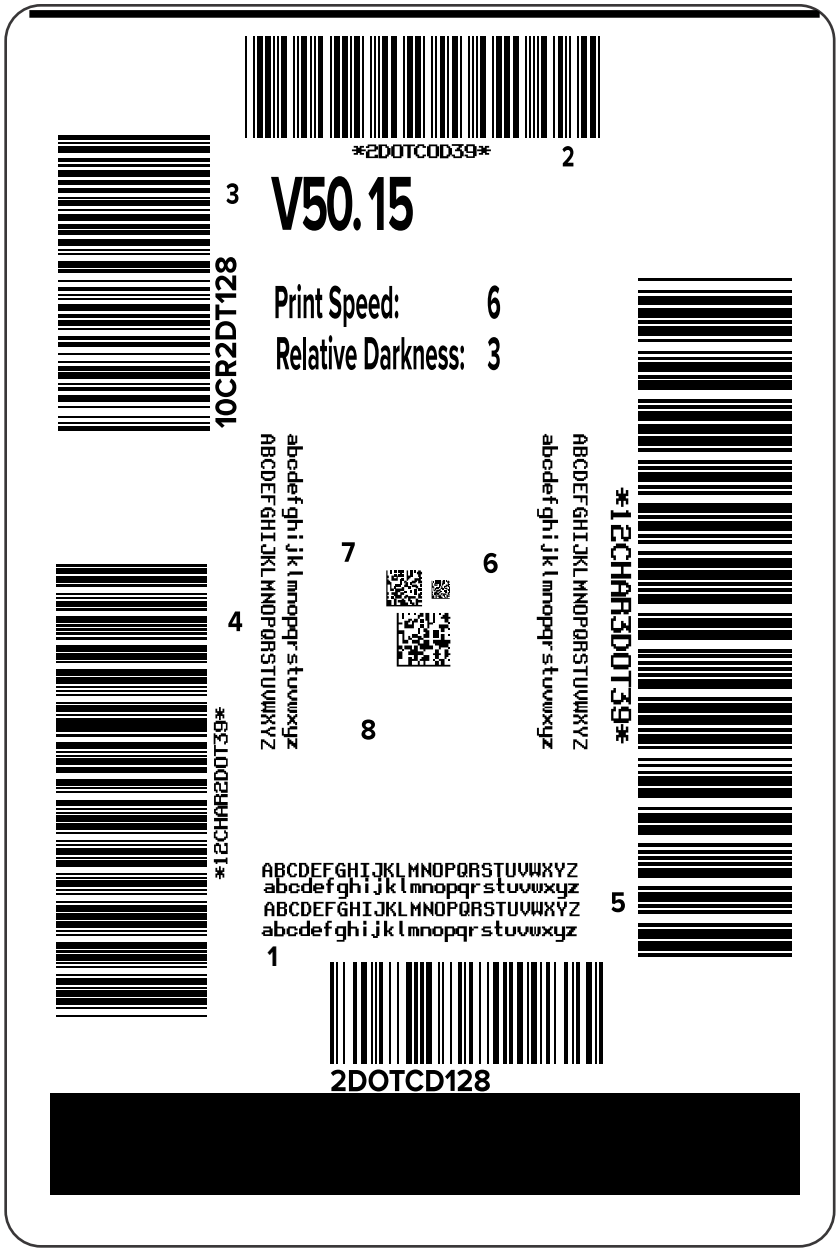

4. Inspect these test labels and determine which one has the optimal print quality for your application. If you have a bar code verifier, use it to measure bars/spaces and calculate the print contrast. If you

do not have a bar code verifier, use your eyes or the system scanner to choose the optimal darkness setting based on the labels printed in this self test.

Figure 14 Bar Code Darkness Comparison

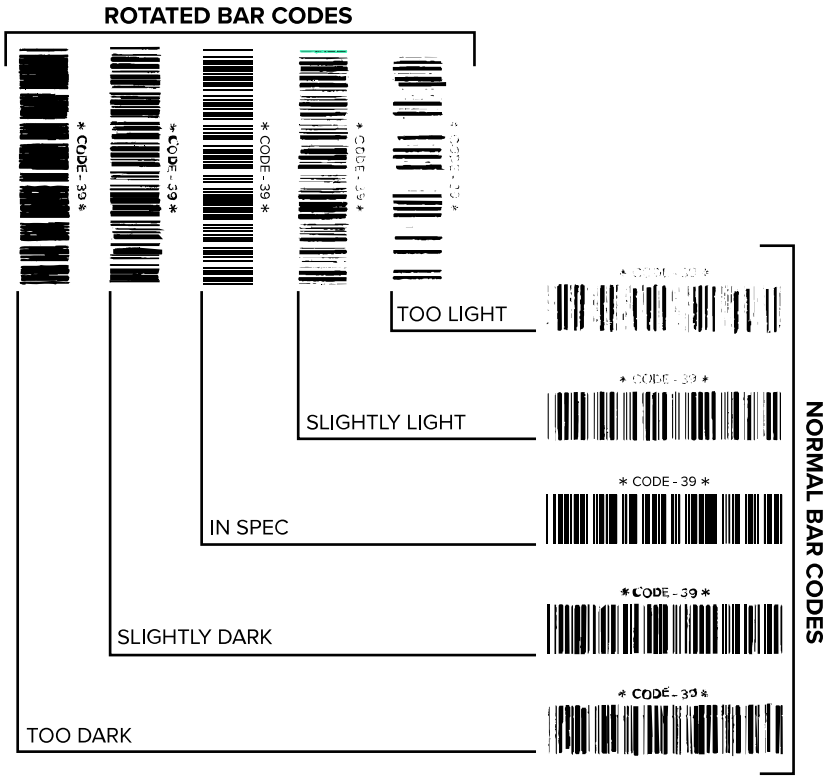

Table 17 Judging Bar Code Quality

Print Quality	Description
Too dark	Labels that are too dark are fairly obvious. They may be readable but not in#spec. • The normal bar code bars increase in size. • The openings in small alphanumeric characters may fill in with ink. • Rotated bar code bars and spaces run together.
Slightly dark	Slightly dark labels are not as obvious. • The normal bar code will be in-spec. • Small character alpha numerics will be bold and could be slightly filled in. • The rotated bar code spaces are small when compared to the in-spec code, possibly making the code unreadable.

Table 17 Judging Bar Code Quality (Continued)

Print Quality	Description
In-spec	The in-spec bar code can only be confirmed by a verifier, but it should exhibit some visible characteristics. • The normal bar code will have complete, even bars and clear, distinct spaces. • The rotated bar code will have complete, even bars and clear, distinct spaces. Although it may not look as good as a slightly dark bar code, the bar code will be in-spec. • In both normal and rotated styles, small alphanumeric characters look complete.
Slightly light	Slightly light labels are, in some cases, preferred to slightly dark ones for in-spec bar codes. • Both normal and rotated bar codes will be in spec, but small alphanumeric characters may not be complete.
Too light	Labels that are too light are obvious. • Both normal and rotated bar codes have incomplete bars and spaces. • Small alphanumeric characters are unreadable.

5. Note the relative darkness value and the print speed printed on the best test label.
6. Add or subtract the relative darkness value from the darkness value specified on the configuration label. The resulting numeric value is the optimal darkness value for that specific label/ribbon combination and print speed.
7. If necessary, change the darkness value to the darkness value on the selected test label.
8. If necessary, change the print speed to the same speed as on the selected test label.

FEED and PAUSE Self Test

Performing this self test resets the printer configuration to the factory default values. Perform a sensor calibration after this self test. (See Calibrating the Ribbon and Media Sensors on page 111.)

1. Turn off (O) the printer.
2. Press and hold **FEED** + **PAUSE** while turning on (I) the printer.
3. Hold **FEED** + **PAUSE** until the first control panel light turns off.

   The printer configuration is reset to the factory default values. No labels print at the end of this test.

CANCEL and PAUSE Self Test

Performing this self test resets the network configuration to the factory default values.

1. Turn off (O) the printer.
2. Press and hold **CANCEL** + **PAUSE** while turning on (I) the printer.

3. Hold **CANCEL** + **PAUSE** until the first control panel light turns off.

   The printer's network configuration is reset to the factory default values. No labels print at the end of this test.

Communication Diagnostics Test

The communication diagnostics test is a troubleshooting tool for checking the interconnection between the printer and the host computer. When the printer is in diagnostics mode, it prints all data received from the host computer as straight ASCII characters with the hex values below the ASCII text. The printer prints all characters received, including control codes such as CR (carriage return). Here is an example of a typical test label from this test.

NOTE: The test label prints upside-down.

Figure 15 Communications Diagnostics Test Label

```
^FS^FO394,25^AA
5E 46 53 5E 46 4F 33 39 34 2C 32 35 5E 41 41
N,18,10^FD(0000
4E 2C 31 38 2C 31 30 5E 46 44 28 30 30 30 30
)999-9999^FS
29 39 39 39 2D 39 39 39 39 5E 46 53 0D 0A
^FO0,50^AAN,18,
5E 46 4F 30 2C 35 30 5E 41 41 4E 2C 31 38 2C
10^FDCENTER STA
31 30 5E 46 44 43 45 4E 54 45 52 20 53 54 41
```

1. Set the print width equal to or less than the label width being used for the test. See Print Width for more information.
2. Set the **DIAGNOSTICS MODE** option to **ENABLED**. For methods, see Communication Diagnostics Mode. See the User Guide for methods for changing this setting.

   The printer enters diagnostics mode and prints any data received from the host computer on a test label.
3. Check the test label for error codes. For any errors, check that your communication parameters are correct.

   Errors show on the test label as follows:

   - FE indicates a framing error.
   - OE indicates an overrun error.
   - PE indicates a parity error.
   - NE indicates noise.
4. Turn the printer off (O) and then back on (I) to exit this self test and return to normal operation.

Sensor Profile

Use the sensor profile image (which will extend across several actual labels or tags) to troubleshoot the following situations:

- The printer experiences difficulty in determining gaps (web) between labels.
- The printer incorrectly identifies preprinted areas on a label as gaps (web).
- The printer cannot detect ribbon.

With the printer in the Ready state, print a sensor profile in one of these ways:

Using the buttons on the control panel	**1.** Turn off (O) the printer. **2.** Press and hold **FEED** + **CANCEL** while turning on (I) the printer. **3.** Hold **FEED** + **CANCEL** until the first control panel light turns off.
Using ZPL	Send the ~JG command to the printer. See the Zebra Programming Guide for more information about this command.
ZT230 printer only	**1.** On the control panel display, navigate to the following item under the SENSORS menu. See Idle Display, Home Menu, and User Menus on page 15 for information about using the control panel and accessing the menus. See the User Guide for information about using the control panel and accessing the menus. PRINT INFORMATION ▼ SENSOR PROFILE ▲ PRINT **2.** Press **RIGHT SELECT** to select PRINT.

Compare your results to the examples shown in this section. If the sensitivity of the sensors must be adjusted, calibrate the printer (see Calibrating the Ribbon and Media Sensors on page 111).

Ribbon Sensor Profile

The line labeled RIBBON (1) on the sensor profile indicates the ribbon sensor readings. The ribbon sensor threshold setting is indicated by OUT (2). If the ribbon readings are below the threshold value, the printer does not acknowledge that ribbon is loaded.

Figure 16 Sensor Profile (Ribbon Section)

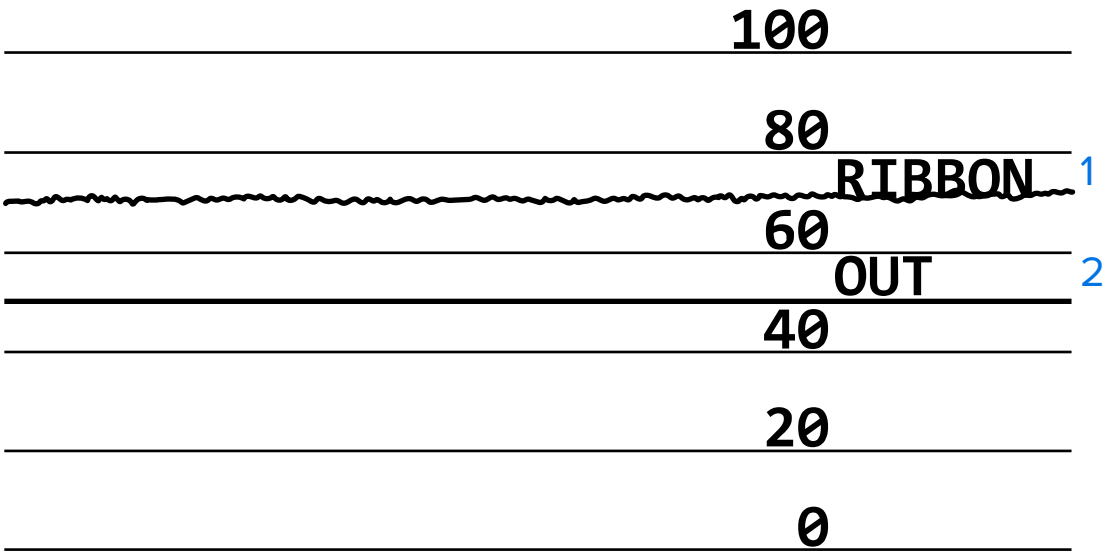

Media Sensor Profile

The line labeled MEDIA (1) on the sensor profile indicates the media sensor readings. The media sensor threshold settings is indicated by WEB (2). The media out threshold is indicated by OUT (3). The upward or downward spikes (4) indicate divisions between labels (the web, notch, or black mark), and the lines between the spikes (5) indicate where labels are located.

If you compare the sensor profile printout to a length of your media, the spikes should be the same distance apart as the gaps on the media. If the distances are not the same, the printer may be having difficulty determining where the gaps are located.

Figure 17 Media Sensor Profile (Gap/Notch Media)

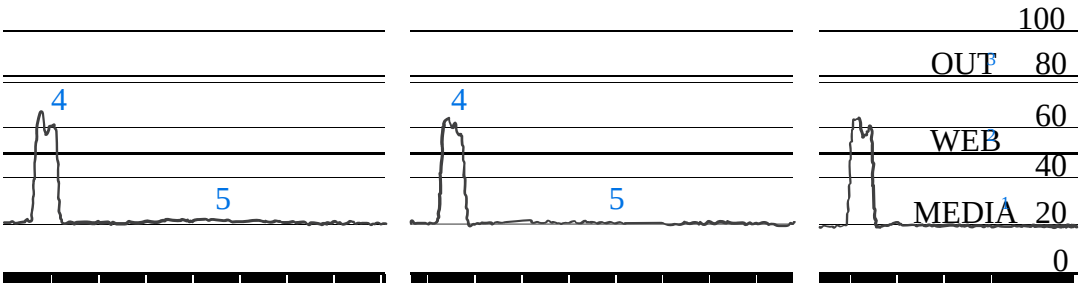

Figure 18 Media Sensor Profile (Black Mark Media)

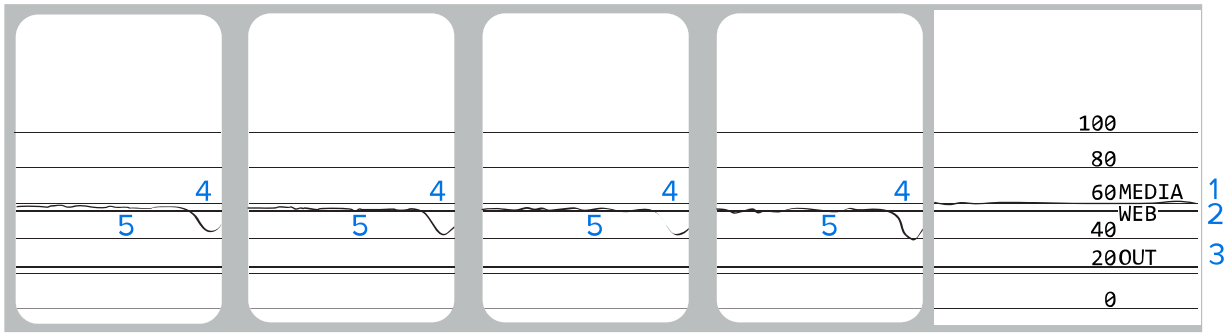

Specifications

This section lists general printer specifications, printing specifications, ribbon specifications, and media specifications.

General Specifications

Model		ZT230	ZT220	ZT210
Height		277 mm (10.9 in.)	280 mm (11.0 in.)	277 mm (10.9 in.)
Weight		242 mm (9.5 in.)	239 mm (9.4 in.)	242 mm (9.5 in.)
Depth		432 mm (17 in.)	432 mm (17 in.)	432 mm (17 in.)
Weight		9.1 kg (20 lb)	7.8 kg (17 lb)	9.1 kg (20 lb)
Electrical		• ZT200 Series is Energy Star certified • Auto-ranging power supply, 100–240 VAC, 50–60 Hz, 100 W		
Temperature	Operating	Thermal Transfer: 5° to 40°C (41° to 104°F) Direct Thermal: 0° to 40°C (32° to 104°F)		
	Storage	–40° to 60°C (–40° to 140°F)		
Relative Humidity	Operating	20% to 85%, non-condensing		
	Storage	5% to 85%, non-condensing		

Power Cord Specifications

CAUTION: For personnel and equipment safety, always use an approved three-conductor power cord specific to the region or country intended for installation. This cord must use an IEC 320 female connector and the appropriate region-specific, three#conductor grounded plug configuration.

Depending on how your printer was ordered, a power cord may or may not be included. If one is not included or if the one included is not suitable for your requirements, refer to the following guidelines:

- The overall cord length must be less than 9.8 ft. (3 m).
- The cord must be rated for at least 10 A, 250 V.

- The chassis ground (earth) must be connected to ensure safety and reduce electromagnetic interference.

Figure 19 Power Cord Specifications

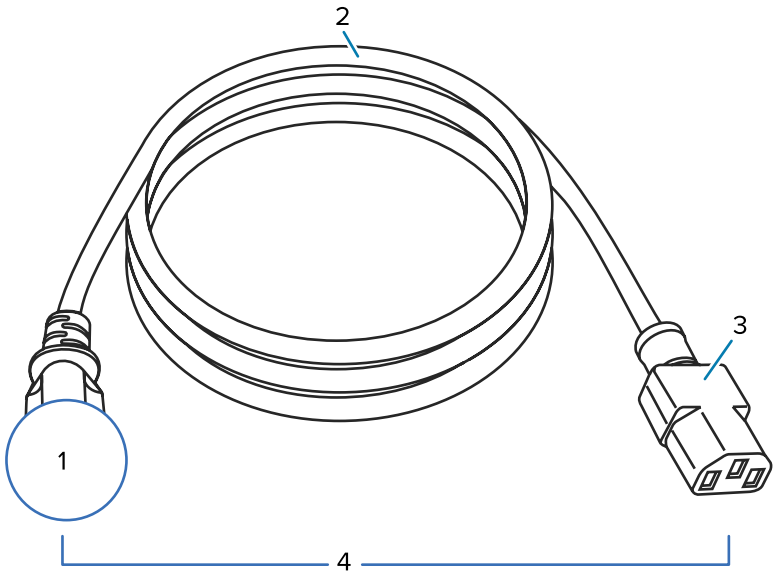

1	AC power plug for your country—This should bear the certification mark of at least one of the known international safety organizations.
2	3-conductor HAR cable or other cable approved for your country.
3	IEC 320 connector—This should bear the certification mark of at least one of the known international safety organizations.
4	Length # 9.8 ft. (3 m). Rating 10 Amp, 250 VAC.

Figure 20 International Safety Organization Certification Symbols

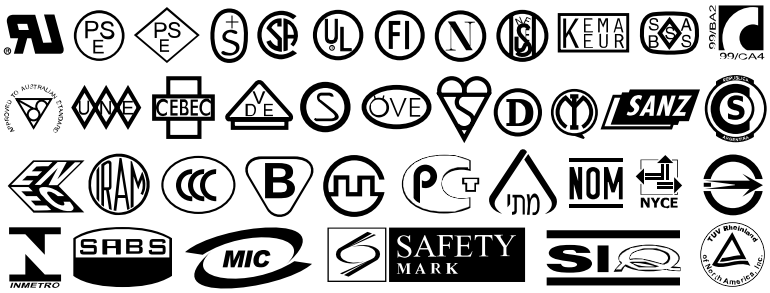

Communication Interface Specifications

This section describes standard and optional specifications.

Standard

The following are standard specifications.

USB 1.1 Data Interface

Limitations and Requirements - Maximum cable length of 16.4 ft (5 m).

Connections and Configuration - No additional configuration is necessary.

RS-232/CCITT V.24 Serial Data Interface

- 2400 to 115000 baud
- parity, bits/character
- 7 or 8 data bit
- XON-XOFF, RTS/CTS, or DTR/DSR handshake protocol required
- 750mA at 5 V from pins 1 and 9

Limitations and Requirements

- You must use a null-modem cable to connect to the printer or a null-modem adaptor if using a standard modem cable.
- Maximum cable length of 50 ft (15.24 m).
- You may need to change printer parameters to match the host computer.

Connections and Configuration

The baud rate, number of data and stop bits, the parity, and the XON/XOFF or DTR control must match those of the host computer.

Optional

Only one of the following may be installed at a time.

IEEE 1284 Bidirectional Parallel Data Interface

Limitations and Requirements

- Use an IEEE 1284 compliant cable.
- Maximum cable length of 10 ft (3 m).
- Recommended cable length of 6 ft (1.83 m).
- No printer parameter changes required to match the host computer.
- Can be installed in either the top or bottom option slot.

Connections and Configuration

No additional configuration is necessary.

Wired 10/100 Internal Ethernet Print Server

Limitations and Requirements

- The printer must be configured to use your LAN.
- A second wired print server can be installed in the bottom option slot.

Connections and Configuration

Refer to the ZebraNet Wired and Wireless Print Servers User Guide for configuration instructions. A copy of this manual is available at www.zebra.com/manuals.

Wireless Print Server (802.11a/b/g/n wireless card support)

Type = Omni directional antenna; Gain 3dBi @ 2.4GHz; 5dBi @ 5GHz

802.11 b

- 2.4GHz
- DSSS (DBPSK, DQPSK and CCK)
- RF power 10 mW (ZebraNet b/g Print Server)

802.11 g

- 2.4GHz
- OFDM (16-QAM and 64-QAM with BPSK and QPSK)
- RF power 10 mW (ZebraNet b/g Print Server)

802.11 n

- 2.4 GHz
- OFDM (16-QAM and 64-QAM with BPSK and QPSK)
- RF power 18.62 dBm (EIRP)

802.11 a/n

- 5.15-5.25 GHz, 5.25-5.35 GHz, 5.47-5.725 GHz
- OFDM (16-QAM and 64-QAM with BPSK and QPSK)
- RF power 17.89 dBm (EIRP)

Limitations and Requirements

- Can print to the printer from any computer on your Wireless Local Area Network (WLAN).
- Can communicate with the printer through the printer's web pages.
- The printer must be configured to use your WLAN.
- Can be installed only in the top option slot.

Configuration

Refer to the ZebraNet Wired and Wireless Print Servers User Guide for configuration instructions. A copy of this manual is available at www.zebra.com/manuals.

Printing Specifications

Print resolution		203 dpi (dots per inch) (8 dots/mm)
		300 dpi (12 dots/mm)
Dot size (nominal) (width x length)	203 dpi	0.110 mm x 0.132 mm (0.0043 in. x 0.0052 in.)
	300 dpi	0.110 mm x 0.132 mm (0.0043 in. x 0.0052 in.)
Maximum print width	203 dpi	108 mm (4.25 in.)
	300 dpi	105.7 mm (4.16 in.)
Bar code modulus (X) dimension	203 dpi	5 mil to 50 mil
	300 dpi	3.3 mill to 33 mil
Programmable constant print speeds	203 dpi and 300 dpi	Per second: • 51mm (2 in.) • 76 mm (3 in.) • 102 mm (4 in.) • 127 mm (5 in.) • 152 mm (6 in.)

Ribbon Specifications

Model		ZT230	ZT220	ZT210
Ribbon width*	Minimum	>51 mm** (> 2 in.**)		
	Maximum	110 mm (4.3 in.)		
Maximum ribbon length		450 m (1476 ft)	300 m (984 ft)	300 m (984 ft)
		3:1 media to ribbon roll ratio	2:1 media to ribbon roll ratio	2:1 media to ribbon roll ratio
Ribbon core inside diameter		25 mm (1 in.)		

* Zebra recommends using ribbon that is at least as wide as the media to protect the printhead from wear.

** Depending on your application, you may be able to use ribbon narrower than 2 in. (51 mm), as long as the ribbon is wider than the media being used. To use a narrower ribbon, test the ribbon's performance with your media to assure that you get the desired results.

Media Specifications

Label length	Minimum (Tear-Off)	17.8 mm (0.7 in.)
	Minimum (Peel-Off)	12.7 mm (0.5 in)
	Minimum (Cutter)	25.4 mm (1.0 in.)
	Maximum	991 mm (39 in.)
Label width	Minimum	19 mm (0.75 in.)
	Maximum	114 mm (4.5 in.)
Total thickness (includes liner, if any)	Minimum	0.076 mm (0.003 in.)
	Maximum	0.25 mm (0.010 in.)
Maximum roll outside diameter	76 mm (3-in.) core	203 mm (8 in.)
	25 mm (1-in.) core	152 mm (6 in.)
Inter-label gap	Minimum	2 mm (0.079 in.)
	Preferred	3 mm (0.118 in.)
	Maximum	4 mm (0.157 in.)
Ticket/tag notch size (width x length)		6 mm x 3 mm (0.25 in. x 0.12 in.)
Hole diameter		3.18 mm (0.125 in.)
Notch or hole position (centered from inner media edge)	Minimum	3.8 mm (0.15 in.)
	Maximum	57 mm (2.25 in.)
Density, in Optical Density Units (ODU) (black mark)		> 1.0 ODU
Maximum media density		≤ 0.5 ODU
Transmissive media sensor (fixed position)		11 mm (7/16 in.) from inside edge