ZT231/ZT231R

Industrial Printer

User Guide

ZEBRA

P1127107-01EN Rev C

2025/09/30

ZEBRA and the stylized Zebra head are trademarks of Zebra Technologies Corporation, registered in many jurisdictions worldwide. All other trademarks are the property of their respective owners. ©2025 Zebra Technologies Corporation and/or its affiliates. All rights reserved.

Information in this document is subject to change without notice. The software described in this document is furnished under a license agreement or nondisclosure agreement. The software may be used or copied only in accordance with the terms of those agreements.

For further information regarding legal and proprietary statements, please go to:

SOFTWARE: zebra.com/informationpolicy.
COPYRIGHTS: zebra.com/copyright.
PATENTS: ip.zebra.com.
WARRANTY: zebra.com/warranty.
END USER LICENSE AGREEMENT: zebra.com/eula.

Terms of Use

Proprietary Statement

This manual contains proprietary information of Zebra Technologies Corporation and its subsidiaries (“Zebra Technologies”). It is intended solely for the information and use of parties operating and maintaining the equipment described herein. Such proprietary information may not be used, reproduced, or disclosed to any other parties for any other purpose without the express, written permission of Zebra Technologies.

Product Improvements

Continuous improvement of products is a policy of Zebra Technologies. All specifications and designs are subject to change without notice.

Liability Disclaimer

Zebra Technologies takes steps to ensure that its published Engineering specifications and manuals are correct; however, errors do occur. Zebra Technologies reserves the right to correct any such errors and disclaims liability resulting therefrom.

Limitation of Liability

In no event shall Zebra Technologies or anyone else involved in the creation, production, or delivery of the accompanying product (including hardware and software) be liable for any damages whatsoever (including, without limitation, consequential damages including loss of business profits, business interruption, or loss of business information) arising out of the use of, the results of use of, or inability to use such product, even if Zebra Technologies has been advised of the possibility of such damages. Some jurisdictions do not allow the exclusion or limitation of incidental or consequential damages, so the above limitation or exclusion may not apply to you.

Contents

Introduction **7**
Printer Components 7
Control Panel 9
Home Screen 10

Printer Setup **13**
Selecting a Location for the Printer 13
Ordering Supplies and Accessories 14
Media 14
Ribbon 14
Inspecting the Contents of the Box 16
Modifying or Viewing Secured Features 18
Connecting the Printer to a Device 19
Connect to a Phone or Tablet 19
Installing Drivers and Connecting to a Windows-Based Computer 19
Determining the Media Handling Method 38
Loading the Media 39
Inserting the Media into the Printer 40
Using Tear-Off Mode 45
Using Peel Mode (with or without Liner Take-Up) 48
Using Cutter Mode or Delayed Cut Mode 54
Loading the Ribbon 58
Running the Print Wizard and Printing a Test Label 61
Using the Print Quality Assistance Wizard 63
Installing Label Design Software 64

Printer Configuration and Adjustment **65**
Changing Printer Settings 65
Changing Printer Settings through the Windows Driver 65
Printer Wizards 67
User Menus 68
Calibrating the Ribbon and Media Sensors 116
Performing Auto Calibration 116
Performing Manual Sensor Calibration 116
Adjusting the Printhead Pressure 120
Adjusting Ribbon Tension 124

Routine Maintenance **125**
Cleaning Schedule and Procedures 125
Cleaning the Exterior, the Media Compartment, and the Sensors 126
Cleaning the Printhead and Platen Roller 126
Cleaning the Peel Assembly 128
Cleaning and Lubricating the Cutter Module 131
Removing Used Ribbon 137
Replacing Printer Components 138
Ordering Replacement Parts 138
Recycling Printer Components 138
Lubrication 138

Diagnostics and Troubleshooting **139**
Evaluating Barcode Quality 140
Configuration Labels 142
PAUSE Self-Test 143
Sensor Profile 144
Using Communication Diagnostics Mode 146
Loading Defaults or Last Saved Values 146
Alert and Error States 148
Alerts and Error Messages 149
Indicator Lights 153

Troubleshooting 157
Printing or Print Quality Issues 157
Ribbon Issues 161
Printer Connectivity Issues 163
Communications Issues 165
RFID Issues 166
Miscellaneous Issues 169
Servicing the Printer 171
Shipping the Printer 171

Using a USB Host Port and the Print Touch Feature 172
Items Required for the Exercises 172
Files for Completing the Exercises 173
USB Host 175
Exercise 1: Copy Files to a USB Flash Drive and Perform USB Mirror 175
Exercise 2: Print a Label Format from a USB Flash Drive 177
Exercise 3: Copy Files to/from a USB Flash Drive 178
Exercise 4: Enter Data for a Stored File with a USB Keyboard and Print a Label 180
Print Touch/Near Field Communication (NFC) 181
Exercise 5: Enter Data for a Stored File with a Device and Print a Label 182

Specifications 183
General Specifications 183
Power Specifications 184
Power Cord Specifications 185
Communication Interface Specifications 187
Standard Connections 188
Optional Connections 189
Wireless Specifications 190
Print Specifications 191
Media Specifications 192
Ribbon Specifications 193

Glossary.....194

Introduction

This section provides a high-level overview of the printer and its components.

Printer Components

The components inside your printer are color-coded. The touch points that you will need to handle are colored gold inside the printers and are highlighted in gold in the illustrations in this manual.

There are various components inside the media compartment of your printer. Depending on the printer model and the installed options, your printer may look slightly different. The labeled components are mentioned in procedures throughout this manual.

Figure 1 Printer Components

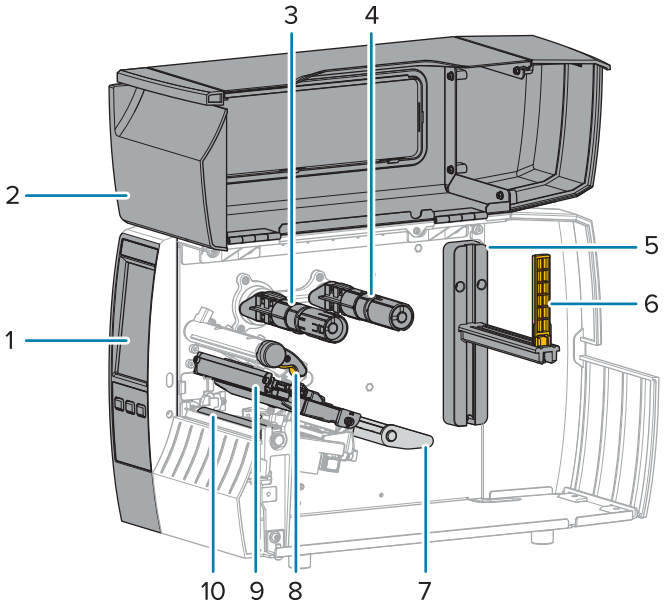

1	Control panel
2	Media door
3	Ribbon take-up spindle*
4	Ribbon supply spindle*

5	Media supply hanger
6	Media supply guide
7	Media dancer assembly
8	Printhead assembly
9	Printhead-open lever
10	Platen roller

* This component appears only in printers that have the Thermal Transfer option installed.

The two toggles on the toggle bar contain dials that are used to adjust printhead pressure. For more information see Adjusting the Printhead Pressure on page 120.

Figure 2 Printhead Pressure Adjustment Dials

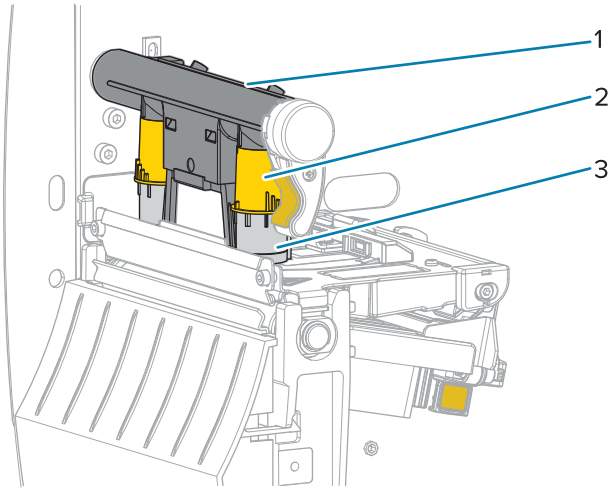

1	Toggle bar
2	Printhead pressure adjustment dial
3	Toggle

Control Panel

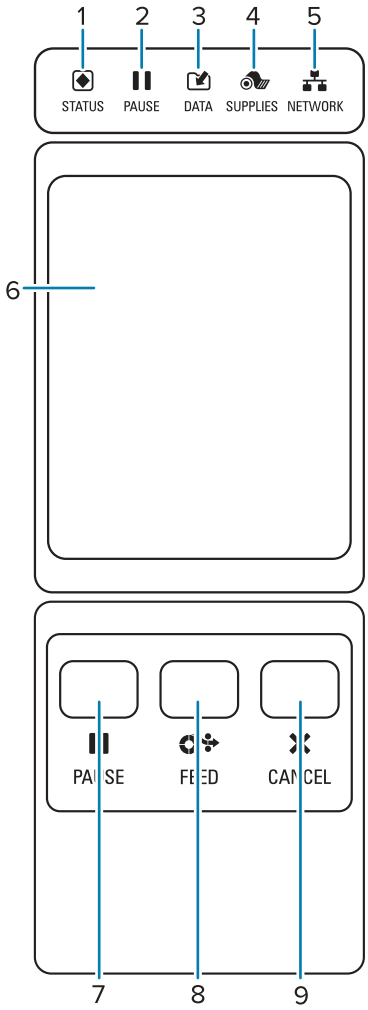

1	**STATUS** light	These indicator lights show the current status of the printer. For more information, see Indicator Lights on page 153.
2	**PAUSE** light	
3	**DATA** light	
4	**SUPPLIES** light	
5	**NETWORK** light	

6	The color touch display shows the printer's current status and allows the user to navigate the menu system.
7	The **PAUSE** button starts or stops printer operation when pressed.
8	The **FEED** button forces the printer to feed one blank label each time the button is pressed.
9	The **CANCEL** button cancels label formats when the printer is paused. • Press once to cancel the next label format. • Press and hold for 2 seconds to cancel all label formats.

Home Screen

The printer's Home screen shows you the printer's current status and allows you to access the printer's menus. You can rotate the image of the printer 360 degrees to view it from all angles.

NOTE: If the background color of the Home screen is yellow or red, the printer is in an alert or error state. For more information, see Alert and Error States.

The following items are located on the Home screen **Print Status** tab:

- Menu—Allows you to change the printer settings. See User Menus.

- Wizards—Allows you to change printer settings by going through prompts. See Printer Wizards.

- Shortcuts—Allows you to quickly access the most recent menu items and to save your favorites. Touch the darkened heart icon next to a menu item to save it to your list of favorites. Items in the favorites are shown in the order in which they were saved.

Printer Setup

This section assists a user with initial setup and operation of the printer.

Selecting a Location for the Printer

Select a location for the printer that meets these conditions:

- Surface—The surface where the printer will be located must be solid, level, and of sufficient size and strength to hold the printer.

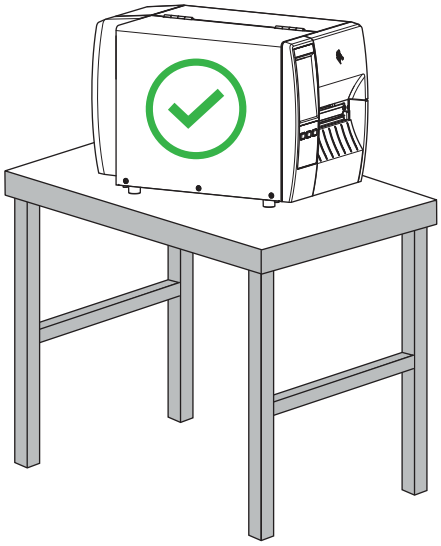

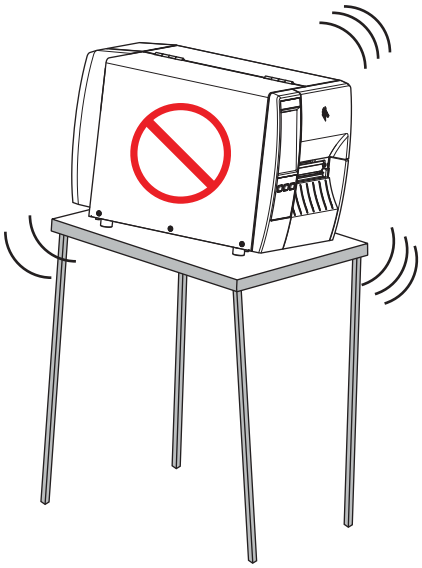

- Space—The area where the printer will be located must include enough space for ventilation and for accessing the printer components and connectors. To allow for proper ventilation and cooling, leave open space on all sides of the printer.

CAUTION: Do not place any padding or cushioning material behind or under the printer because this restricts air flow and could cause the printer to overheat.

- Power—The printer should be within a short distance of an appropriate power outlet that is easily accessible.
- Data communication interfaces—The printer must be within range of your WLAN radio (if applicable) or within an acceptable range for other connectors to reach your data source (usually a computer). For more information on maximum cable lengths and configuration, see Communication Interface Specifications on page 187.

- Operating conditions—The printer is designed to function in a wide range of environmental and electrical conditions, including a warehouse or factory floor. The following table shows the temperature and relative humidity requirements for the printer when it is operating.

Table 1 Operating Temperature and Humidity

Mode	Temperature	Relative Humidity
Thermal Transfer	40° to 104°F (5° to 40°C)	20 to 85% non-condensing
Direct Thermal	32° to 104°F (0° to 40°C)	

Ordering Supplies and Accessories

You need to purchase certain supplies before you set up your printer, and you may choose to purchase accessories for the printer.

The following things that you will need do NOT come with the printer:

- Communication/network cables (such as serial or wired Ethernet) other than USB
- Media
- Ribbon (if your printer has a thermal transfer option)

For recommended supplies to ensure optimal operation of your printer, go to zebra.com/supplies.

Media

The type and size of media that you choose should be appropriate for the options installed on the printer (see Determining the Media Handling Method on page 38. Refer to the media specifications for the printer for minimum label lengths and other important things to consider.

For optimal printing quality and proper printer performance across the product lines, Zebra strongly recommends the use of Zebra Certified Supplies as part of the total solution. A wide range of paper, polypropylene, polyester, and vinyl stock has been specifically engineered to enhance the printing capabilities of the printer and to prevent premature printhead wear. To purchase supplies, go to zebra.com/supplies.

The Glossary includes terms associated with media, such as black mark media, gap/notch media, linerless media, RFID media, fanfold media, and roll media. Use these terms to help determine which type of media will suit your needs.

See Also

ZT231 Specifications

Ribbon

NOTE: This section applies only to printers that have the Thermal Transfer option installed.

Do I need to use ribbon?	The media itself determines if you will need to use ribbon. • Thermal Transfer media—Requires ribbon. • Direct Thermal media—Does NOT require ribbon.

How can I tell if media is Direct Thermal or Thermal Transfer? (See direct thermal on page 195 and thermal transfer on page 202 for definitions.)	The easiest way to find out is to scratch the surface of the media rapidly with your fingernail. If a black mark appears where you scratched, the media is Direct Thermal, so you do NOT need ribbon.
What kind of ribbon can I use?	This printer can use ONLY ribbon coated on the outside, unless you purchase and install the optional spindle that allows the use of ribbon coated on the inside. Contact your authorized Zebra reseller for ordering information.
How can I tell which side of the ribbon is coated?	Use one of these two methods to determine which side of the ribbon is coated: • Performing an Adhesive Test. • Performing a Ribbon Scratch Test.

Inspecting the Contents of the Box

Ensure that the printer box contains all the items you need to set it up.

IMPORTANT: Zebra Technologies is not responsible for any damage incurred during the shipment of the equipment and will not repair this damage under warranty.

1. Carefully remove the printer from the box.

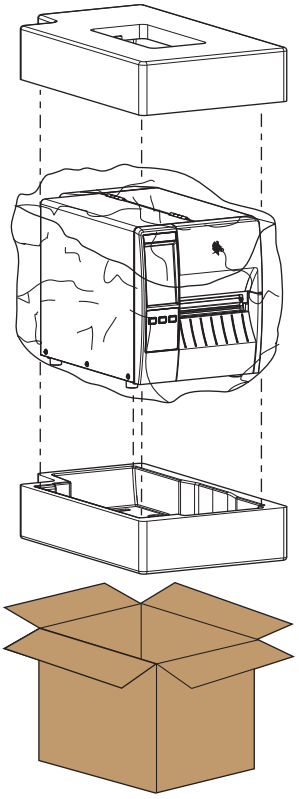

2. Verify that the following items are included in the box with the printer:

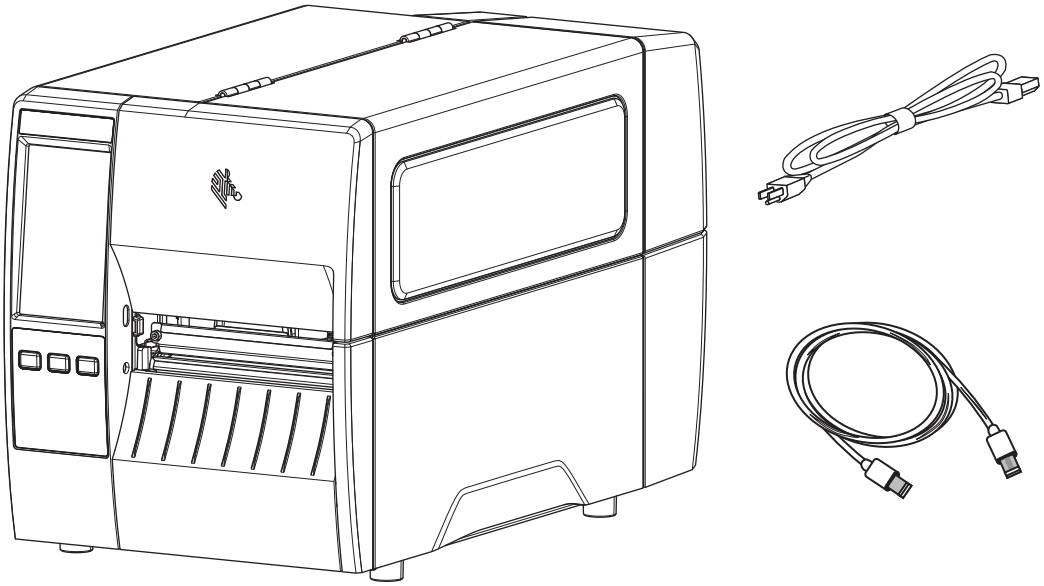

Additional items may be included, depending on the options ordered with the printer.

3. If anything is missing, notify your authorized Zebra reseller.
4. Immediately unwrap the printer and inspect for shipping damage.
   - Save all packing materials.
   - Check all exterior surfaces for damage.
   - Raise the media door, and inspect the media compartment for damage to components.
5. If you discover shipping damage upon inspection:
   - Immediately notify the shipping company and file a damage report.
   - Keep all packaging material for shipping company inspection.
   - Notify your authorized Zebra reseller.
6. The printer shipped with several protective items for shipping, including a film of plastic over the transparent window on the media door. Before operating the printer, remove these protective items.

Modifying or Viewing Secured Features

Some features may be locked either by default or by choice, and you need to perform certain tasks before they can be viewed or modified.

EU RED

If you purchased your printer within European, Middle Eastern, or African (EMEA) countries on or after August 1, 2025, the printer comes with specific security features to meet the EU Radio Equipment Directive (RED) requirements. As part of the setup process, you must do the following before you can access the control panel parameters or modify certain settings using commands:

- set a Protected Mode password and configure Protected Mode
- set a front panel password/PIN to view the control panel parameters

For more information, go to zebra.com/asr or refer to the Zebra Link-OS PrintSecure Printer Administration Guide.

Protected Mode

For printers that already have Protected Mode set up, you need to enter the Protected Mode (admin) password to change certain settings on the printer. For more information, refer to the Zebra Link-OS PrintSecure Printer Administration Guide.

Front Panel Password/PIN

The front panel display can be locked, limiting access to the control panel parameters until the front panel password is entered. This value is initially undefined and must be set before it can be used.

For more information about the front panel password, refer to the Zebra Link-OS PrintSecure Printer Administration Guide.

Connecting the Printer to a Device

After you have set up the printer, you are ready to connect the printer to your device (such as a computer, phone, or tablet).

NOTE: If you purchased your printer in the EMEA region on or after August 1, 2025, go to Modifying or Viewing Secured Features on page 18.

Connect to a Phone or Tablet

Download the free Zebra Printer Setup Utility app for your device.

- Android devices
- Apple devices

The applications support the following types of connectivity:

- Bluetooth Classic
- Bluetooth Low Energy (Bluetooth LE)
- Wired/Ethernet
- Wireless
- USB On-The-Go

For the User Guides for these printer setup utilities, go to zebra.com/setup.

Installing Drivers and Connecting to a Windows-Based Computer

To use your printer with a Microsoft Windows-based computer, you must install the correct drivers first.

IMPORTANT: You may connect your printer to your computer using any of the connections that you have available. However, do not connect any cables from your computer to the printer until you are instructed to do so. If you connect them at the wrong time, your printer will not install the correct printer drivers. To recover from incorrect driver installation, see What to Do If You Forget to Install Printer Drivers First on page 33.

Installing the Drivers

Follow these steps to install the correct drivers.

1. Navigate to zebra.com/drivers.
2. Click **Printers**.
3. Select your printer model.
4. On the printer product page, click **Drivers**.
5. Download the appropriate driver for Windows.

   The driver executable file (such as `zd86423827-certified.exe`) is added to your Download folder.

6. Run the executable file and follow the prompts.

   When setup is complete, you may select to add all of the drivers to your system (**Configure System**) or to add/configure specific printers (see Running the Printer Installation Wizard).

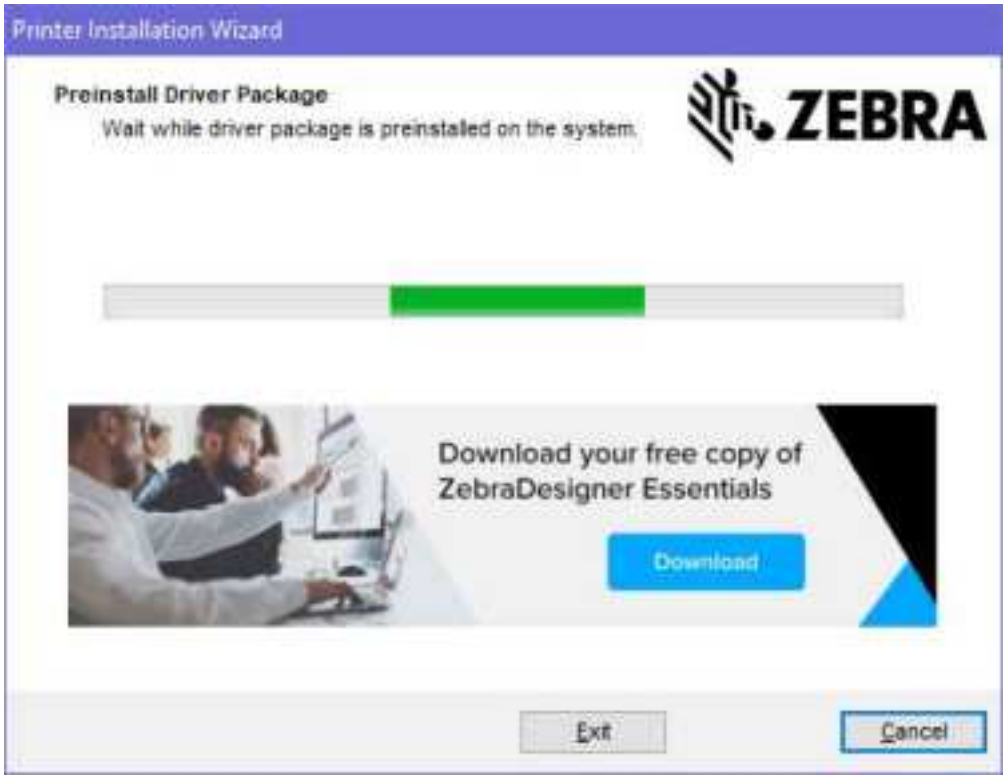

7. Select **Configure System**, and then click **Finish**.

   The Printer Installation Wizard installs the drivers.

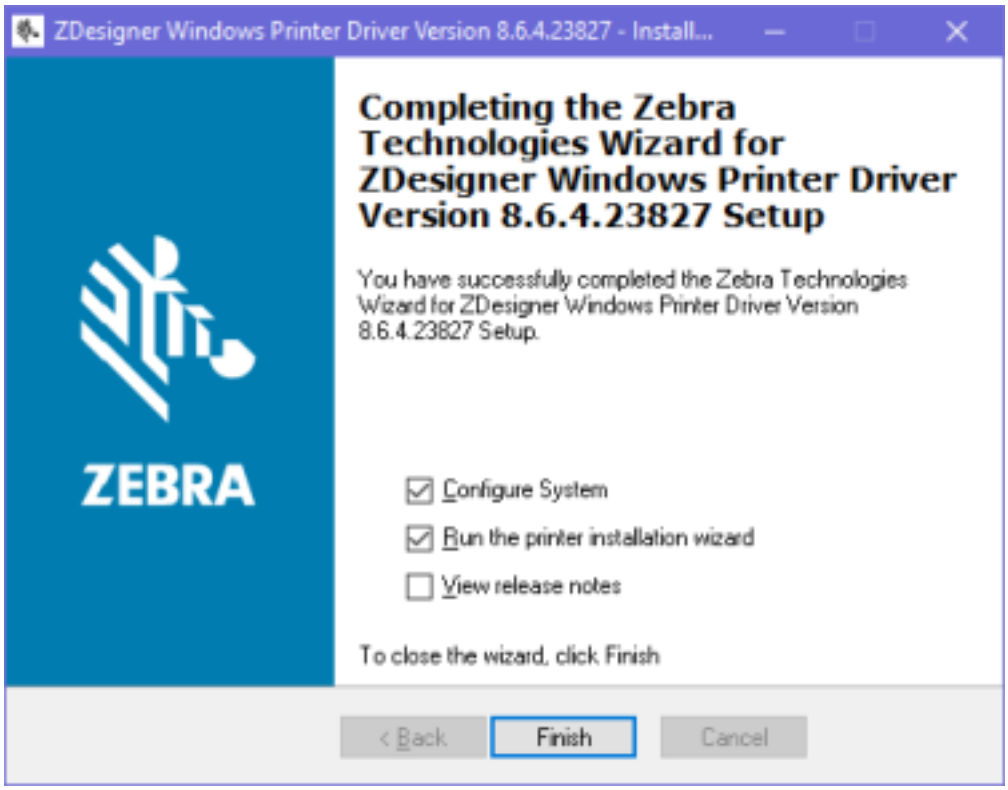

Running the Printer Installation Wizard

1. On the last screen of the driver installer, leave **Run the Printer Installation Wizard** checked, then click **Finish**.

   The Printer Installation wizard displays.

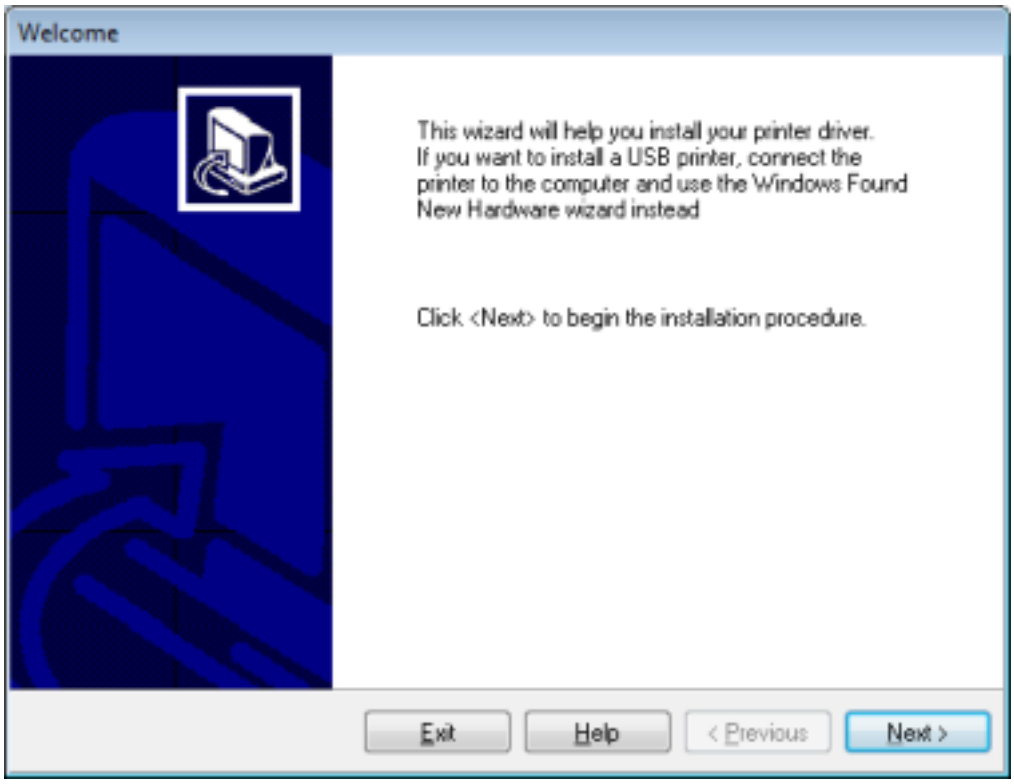

2. Click **Next**.

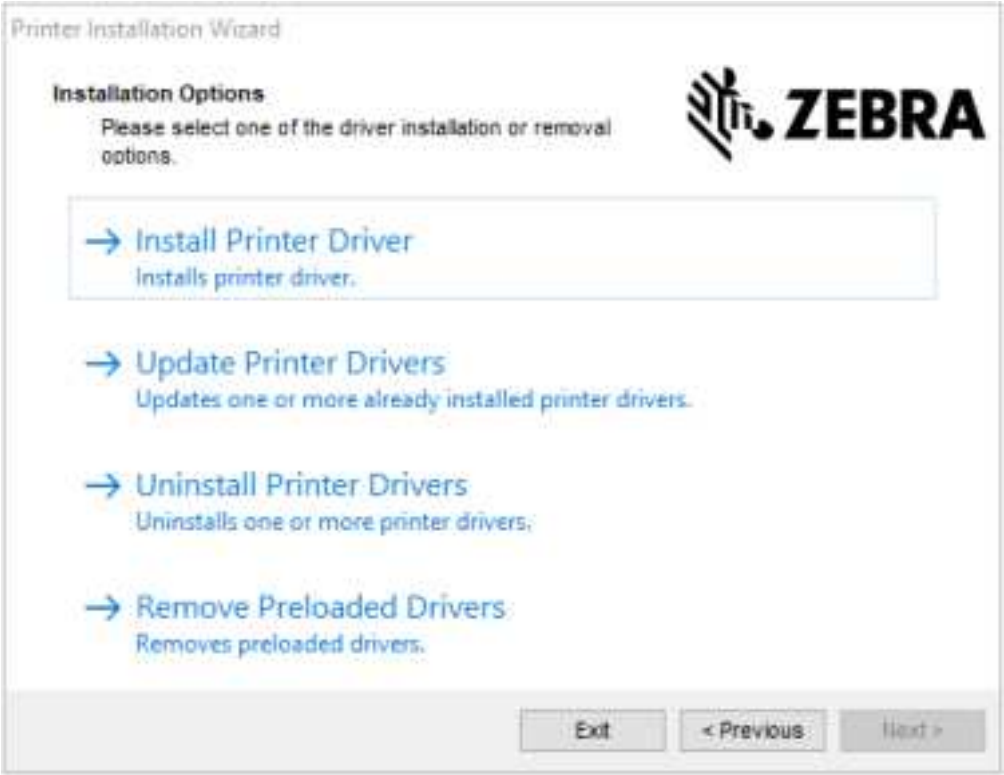
Printer Installation Wizard
Installation Options
Please select one of the driver installation or removal options.
ZEBRA
Install Printer Driver
Installs printer driver.
Update Printer Drivers
Updates one or more already installed printer drivers.
Uninstall Printer Drivers
Uninstalls one or more printer drivers.
Remove Preloaded Drivers
Removes preloaded drivers.
Exit
< Previous
Next >

3. Click **Install Printer Driver**.

   The license agreement displays.

4. Read and accept the terms of the license agreement, and then click **Next**.

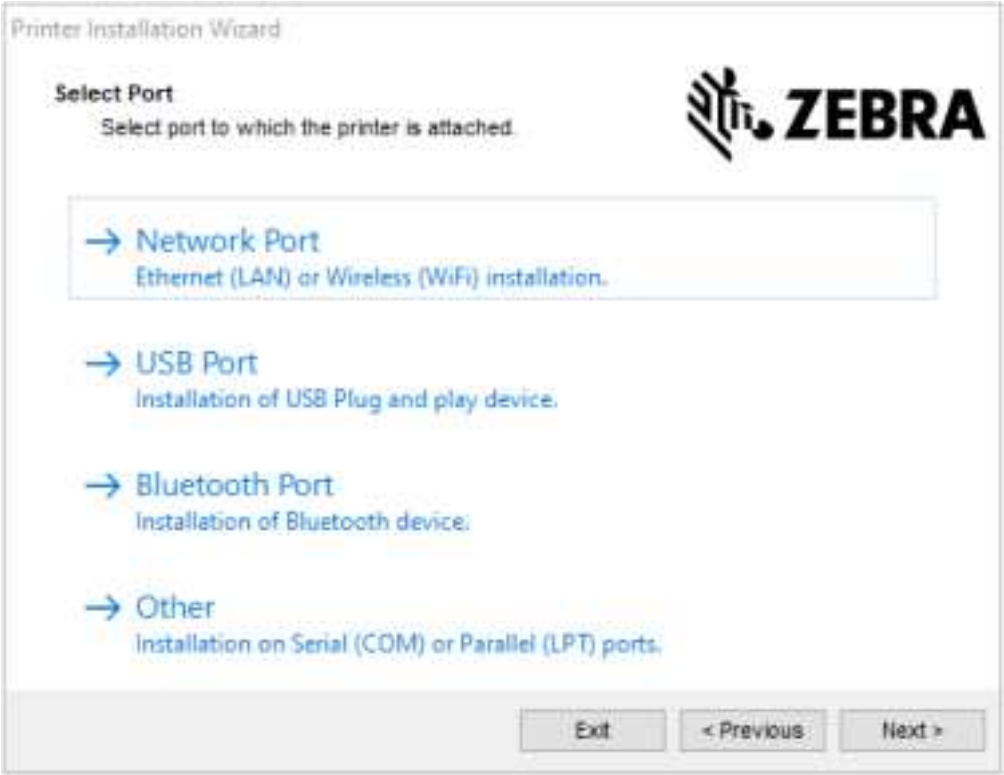

5. Select the communication option that you want to configure for your printer:
   - Network Port—or installing printers with an Ethernet (LAN) or wireless (Wi-Fi) network connection. Wait for the driver to scan your local network for devices and follow the prompts. If necessary, set the values as directed in Connecting to Your Network through the Printer's Ethernet Port on page 28 or in Connecting the Printer to Your Wireless Network on page 31.
   - USB Port—For installing printers connected with the USB cable. Connect the printer to the computer as shown in Connecting to a Computer Using the Printer's USB Port on page 26. If the printer is already connected and powered on, you may need to remove the USB cable and install it again. The driver will automatically search for the model of the connected printer.
   - Bluetooth Port—For installing printers with a Bluetooth connection.
   - Other—For installation using another type of cable, such as Serial (COM). No additional configuration is necessary.
6. If prompted, select your printer model and resolution.

   The model and resolution are on a part number sticker on the printer, usually located below the media hanger. The information will be in the following format:

```
Part Number: XXXXXxY - xxxxxxxx
```

   where

   `XXXXX` = the printer model, and `Y` = the printer resolution (`2` = 203 dpi, `3` = 300 dpi, `6` = 600 dpi).

   For example, in the part number `ZT411x3 - xxxxxxxx`, `ZT411` indicates that the printer is a ZT411 model, and `3` indicates that the printhead resolution is 300 dpi.

Connecting to a Computer Using the Printer's USB Port

1. After you install the drivers, remove the label that covers the USB port.

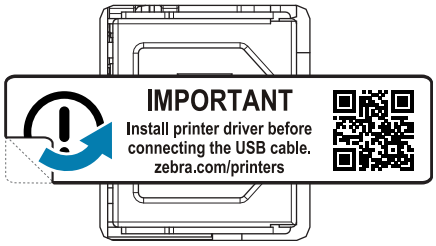

2. Connect the USB cord to the USB port on your printer.

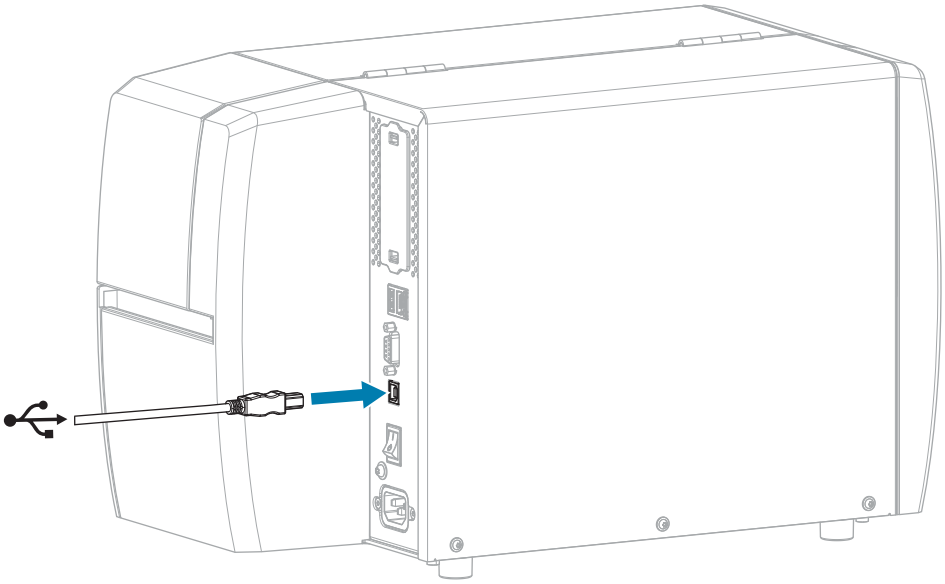

3. Connect the other end of the USB cord to your computer.
4. Plug the A/C power cord into the A/C power connector on the back of the printer.

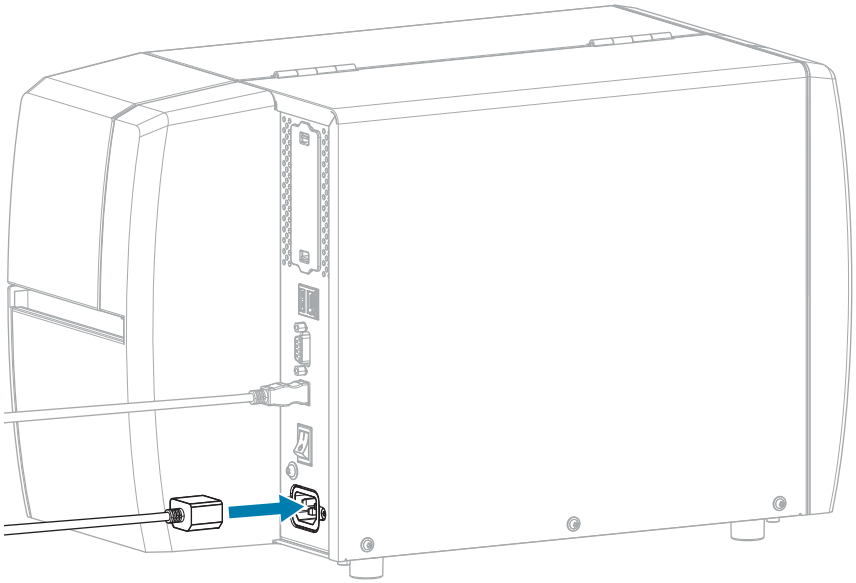

5. Plug the A/C power cord into an appropriate power outlet.

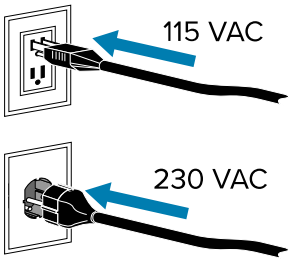

6. Turn on (**I**) the printer.

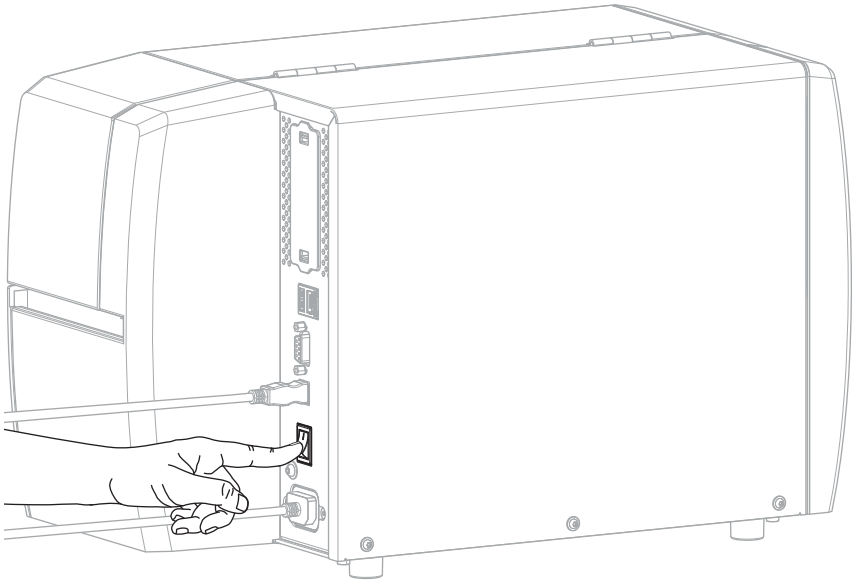

As the printer boots up, your computer completes the driver installation and recognizes your printer.

CAUTION—PRODUCT DAMAGE: If you need to power cycle the printer, allow it to fully boot up first. Then after turning it off, wait 30 seconds before turning it back on. Power cycling the printer too quickly can cause issues.

If you did not install the drivers first, see What to Do If You Forget to Install Printer Drivers First on page 33.

Connecting to Your Network through the Printer's Ethernet Port

To use a wired print server (Ethernet) connection, you may need to configure the printer to communicate with your Local Area Network (LAN).

NOTE: For printers purchased in the EMEA region after August 1, 2025, you must configure a Protected Mode password and front panel password for the printer before you can perform wired or wireless setup. For additional information, go to zebra.com/asr or refer to the Zebra Link-OS PrintSecure Printer Administration Guide.

For other printers with Protected Mode enabled, depending on the configuration, you may need to enter the Protected Mode password to change certain settings on the printer. For more information, refer to the Zebra Link-OS PrintSecure Printer Administration Guide.

For additional information about Zebra print servers, refer to the ZebraNet Wired and Wireless Print Server User Guide. To download the latest version of this guide, go to zebra.com/manuals.

1. After you install the drivers (see Installing the Drivers on page 19), connect the printer to an Ethernet cable that is connected to your network.

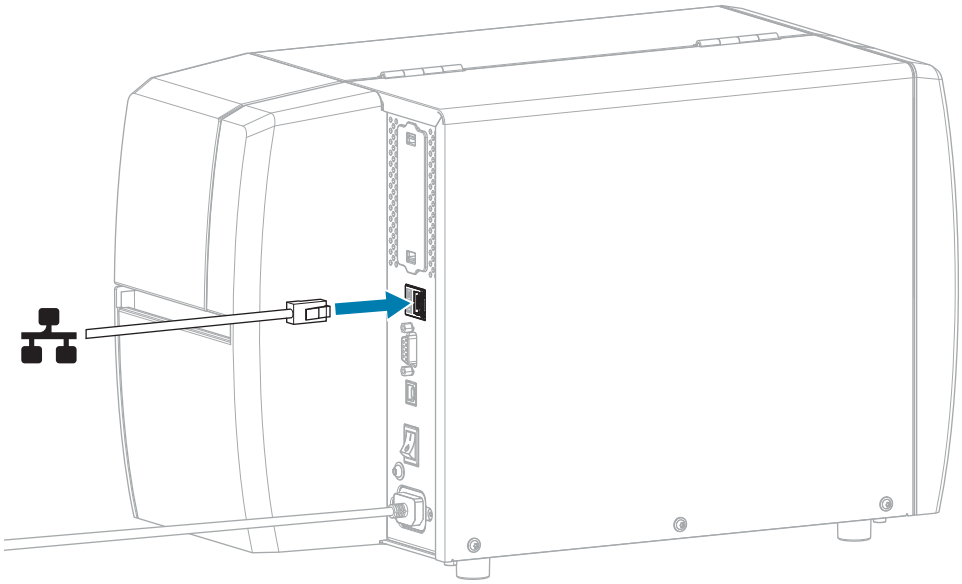

2. Plug the A/C power cord into the A/C power connector on the back of the printer.

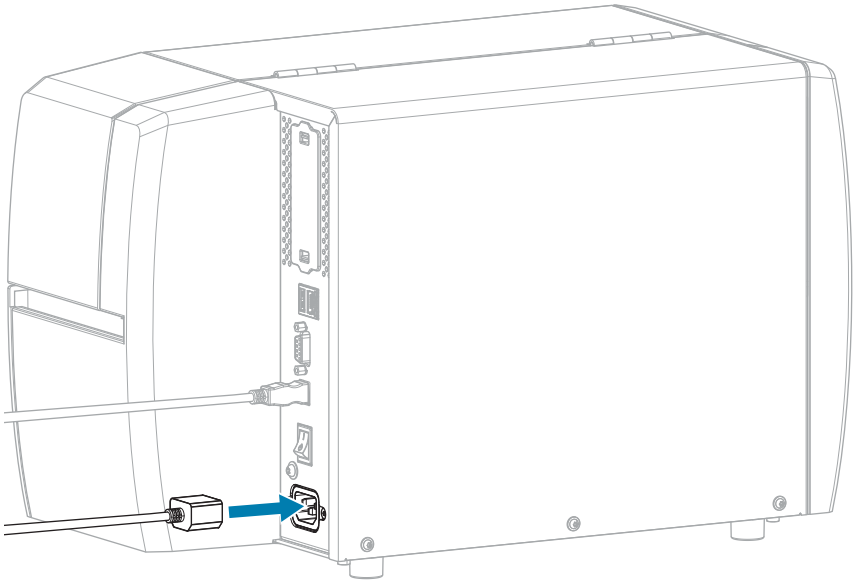

3. Plug the A/C power cord into an appropriate power outlet.

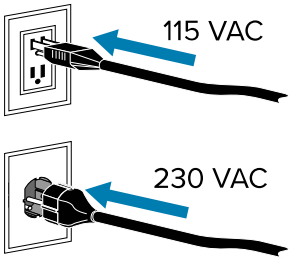

4. Turn on (**I**) the printer.

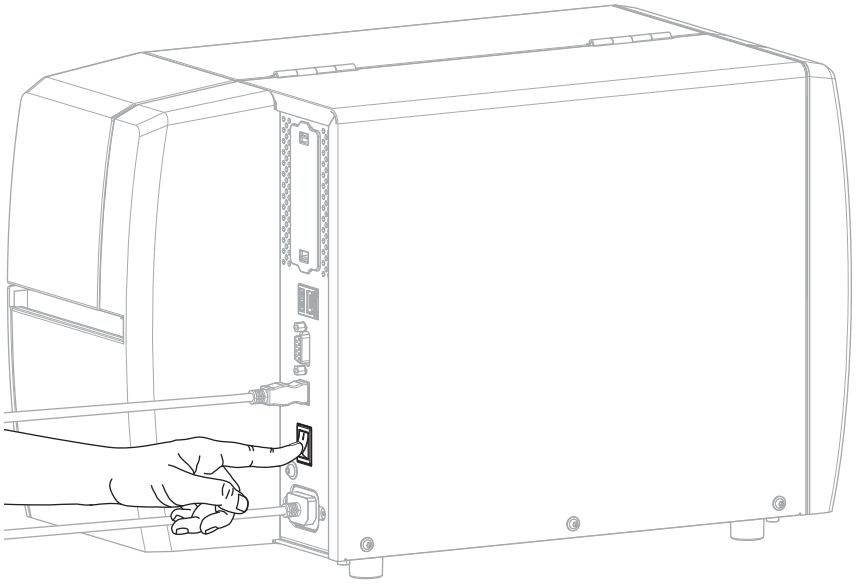

The printer attempts to communicate with your network. If it is successful, it fills in your LAN's gateway and subnet values and gets an IP address.

CAUTION—PRODUCT DAMAGE: If you need to power cycle the printer, allow it to fully boot up first. Then after turning it off, wait 30 seconds before turning it back on. Power cycling the printer too quickly can cause issues.

If you did not install the drivers first, see What to Do If You Forget to Install Printer Drivers First on page 33.

5. On the Home screen, touch the Printer Info tab. Check the display to see if an IP address was assigned to the printer.

If the printer's IP address is...	Then...

`0.0.0.0`
or
`000.000.000.000`
	The NETWORK light is off or displays steady red. (See Indicator Lights on page 153 for more information.)
	a. Check the Ethernet connector on the back of the printer. If no light is on or blinking, the Ethernet connection is not active. Check that both ends of the cord are plugged in correctly and that the network port that you are plugging into is active. When this issue is resolved, the printer should connect automatically.
	b. If necessary, configure the following printer settings to set a static IP address and then reset the network. Contact your network administrator for the proper values for your network.
	• Connection > Wired > Wired IP Protocol—Change the value from ALL to PERMANENT.
	• Connection > Wired > Wired Gateway—Match the gateway value of your LAN.
	• Connection > Wired > Wired Subnet—Match the subnet value of your LAN.
	• Connection > Wired > Wired IP Address—Assign a unique IP address to the printer.

any other value	The connection was successful. The NETWORK light displays steady green or yellow, depending on the network. (See Indicator Lights on page 153 for more information.)

6. Reset the network (see Connection > Networks > Reset Network) to allow changes to the network settings to take effect.

Connecting the Printer to Your Wireless Network

If you wish to use the printer's optional wireless print server, you must first connect the printer to your computer using one of the other available connections. While the printer is connected via one of those connections, you configure the printer to communicate with your Wireless Local Area Network (WLAN) through the wireless print server.

For additional information about Zebra print servers, refer to the ZebraNet Wired and Wireless Print Server User Guide. To download the latest version of this guide, go to zebra.com/manuals.

NOTE: For printers purchased in the EMEA region after August 1, 2025, you must configure a Protected Mode password and front panel password for the printer before you can perform wired or wireless setup. For additional information, go to zebra.com/asr or refer to the Zebra Link-OS PrintSecure Printer Administration Guide.

For other printers with Protected Mode enabled, depending on the configuration, you may need to enter the Protected Mode password to change certain settings on the printer. For more information, refer to the Zebra Link-OS PrintSecure Printer Administration Guide.

1. Install the drivers as instructed in Installing Drivers and Connecting to a Windows-Based Computer on page 19.
2. Plug the A/C power cord into the A/C power connector on the back of the printer.

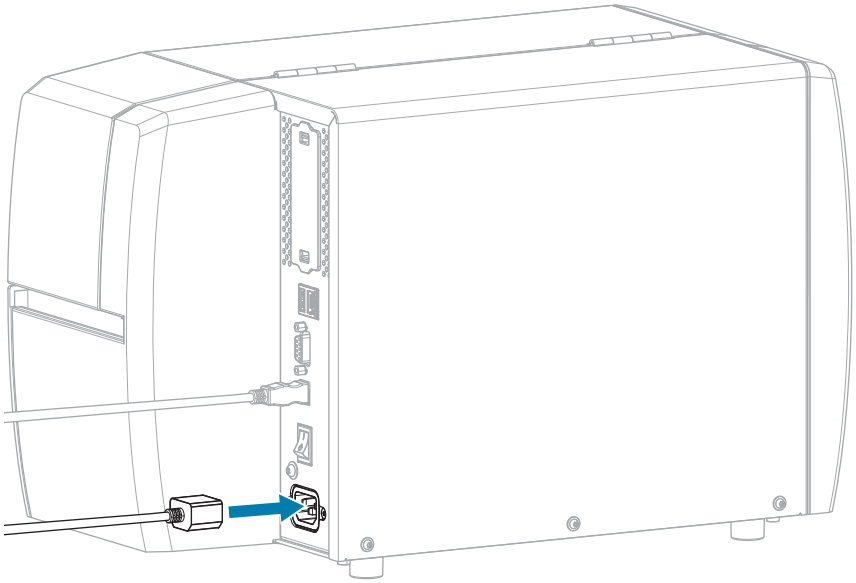

3. Plug the A/C power cord into an appropriate power outlet.

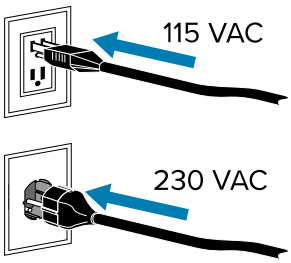

4. Turn on (**I**) the printer.

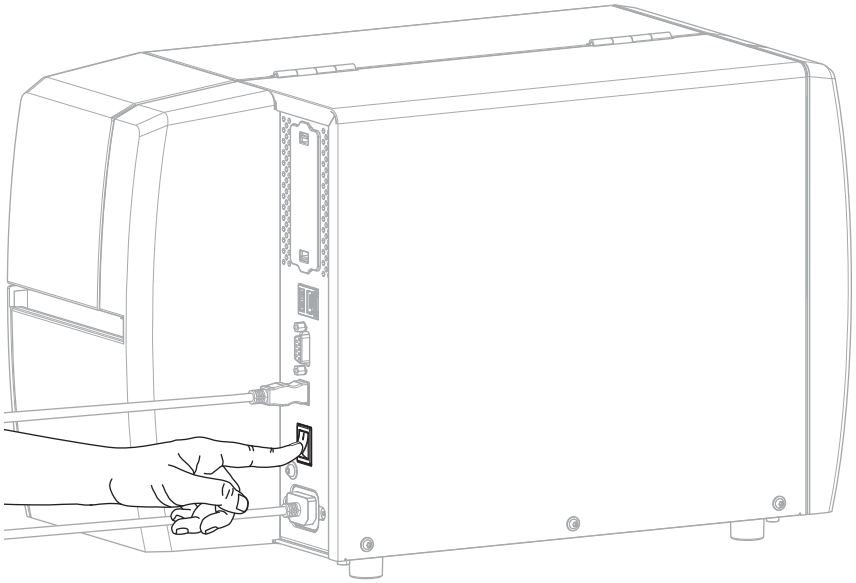

As the printer boots up, your computer completes the driver installation and recognizes your printer.

CAUTION—PRODUCT DAMAGE: If you need to power cycle the printer, allow it to fully boot up first. Then after turning it off, wait 30 seconds before turning it back on. Power cycling the printer too quickly can cause issues.

If you did not install the drivers first, see What to Do If You Forget to Install Printer Drivers First on page 33.

5. If necessary, specify the ESSID value that matches the value used by your wireless router. Check with your network administrator for the ESSID value to use. See Connection > Networks > ESSID for ways to change the value.
6. If necessary, configure the following printer settings. Contact your network administrator for the proper values for your network.
   - Connection > WLAN > WLAN Gateway—Match the gateway value of your WLAN.
   - Connection > WLAN > WLAN Subnet—Match the subnet value of your WLAN.
7. Reset the network (see Connection > Networks > Reset Network) to allow changes to the network settings to take effect.
8. If the printer still does not connect, consider setting a static IP address by configuring the following additional settings, and then reset the network again. Contact your network administrator for the proper values for your network.
   - Connection > WLAN > WLAN IP Protocol—Change the value from ALL to PERMANENT.)
   - Connection > WLAN > WLAN IP Address—Assign a unique IP address to the printer.

What to Do If You Forget to Install Printer Drivers First

If you plug in your Zebra printer before installing the drivers, the printer displays as an Unspecified device.

1. Follow the instructions in Installing Drivers and Connecting to a Windows-Based Computer on page 19 to download and install the drivers.

2. From the Windows menu, open the Control Panel.
3. Click **Devices and Printers**.

   In this example, the MZ320 is an incorrectly-installed Zebra printer.

4. Right-click on the device, and select **Properties**.

   The properties for the device display.

5. Click the **Hardware** tab.

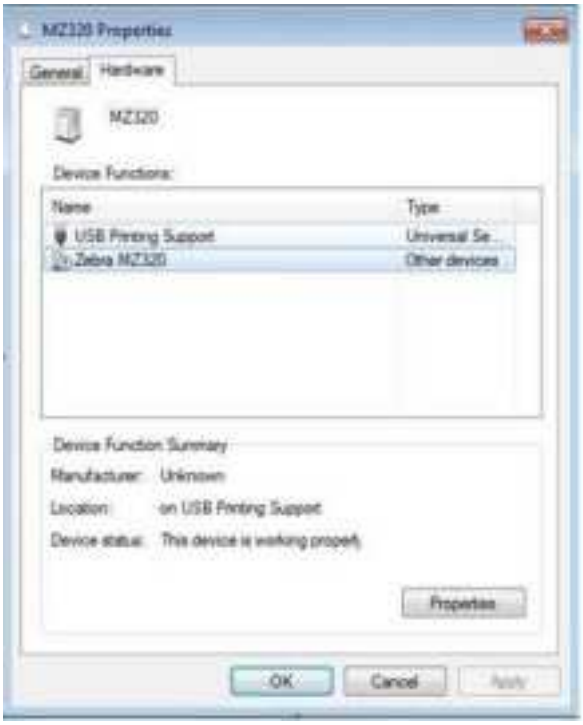

6. Select the Zebra printer in the **Device Functions** list, then click **Properties**.

   The properties display.

7. Click **Change settings**, then click the **Driver** tab.

8. Click **Update Driver**.

9. Click **Browse my computer for driver software**.
10. Click **Browse...** and navigate to the Downloads folder.

11. Click **OK** to select the folder.

12. Click **Next**.

The device is updated with the correct drivers.

Determining the Media Handling Method

Before loading media, decide on a media handling method that matches the media being used and the printer options available.

Figure 3 Printer Options

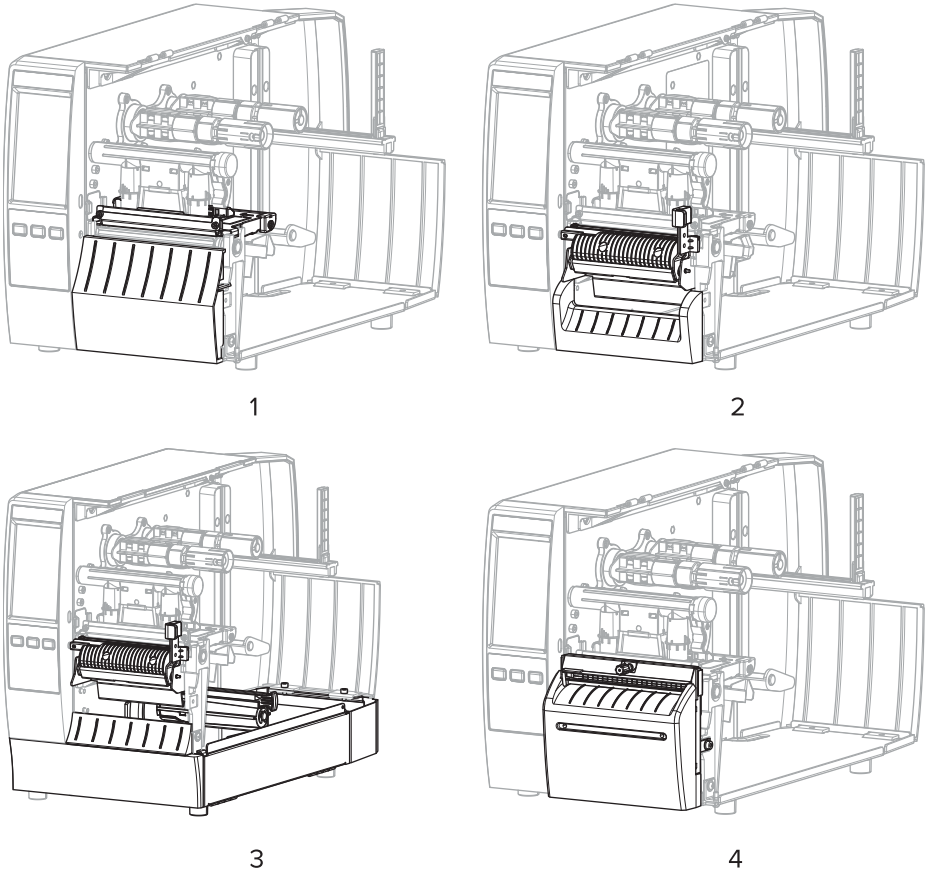

1	Tear-Off (standard)	2	Peel option
3	Peel with Liner Take-Up option	4	Cutter option

Table 2 Media Handling Methods and Printer Options

Method	Required Printer Option	Description
Tear Off	Can be used with any printer option and most media types.	The printer prints label formats as it receives them. The printer operator can tear off the printed labels when the printer stops.
Peel Off	Peel or Liner Take-Up option	The printer peels the label from the backing during printing and then pauses until the label is removed. The empty backing may be allowed to exit the front of the printer, or it may be wound onto the liner take-up spindle or rewind spindle.

Table 2 Media Handling Methods and Printer Options (Continued)

Method	Required Printer Option	Description
Cutter*	Cutter option	The printer cuts between labels after each one is printed.
Delayed Cut*	Cutter option	The printer waits for a delayed cut ZPL command (`~JK`) before it cuts the last printed label.
Applicator	Applicator port connection required. This mode is for use with a machine that applies labels.	The printer prints when it receives a signal from the applicator. Authorized Service Technicians should refer to the Service Guide for additional information about the applicator interface.
NOTE: Linerless Peel, Linerless Rewind, Linerless Tear, Linerless Cut, and Linerless Delayed Cut are options reserved for future use.		

1. On the Home screen, touch **Menu** > **Print** > **Image Adjust** > **Media Handling**.

   The Media Handling options display.

2. Select a method that matches the media being used and the printer options available.
3. Touch the **Home** icon to return to the Home screen.

Loading the Media

Use the instructions in this section for loading roll or fanfold media in the appropriate label collection method for your needs.

IMPORTANT: You are not required to turn off the printer power when working near an open printhead, but Zebra recommends it as a precaution. If you turn off the power, you will lose all temporary settings, such as label formats, and you must reload them before you resume printing.

NOTE: The media path is the same for roll and fanfold media.

Inserting the Media into the Printer

The media loading path is the same for both roll and fanfold media. Roll media is shown in most images in this section.

1. Open the media cover.

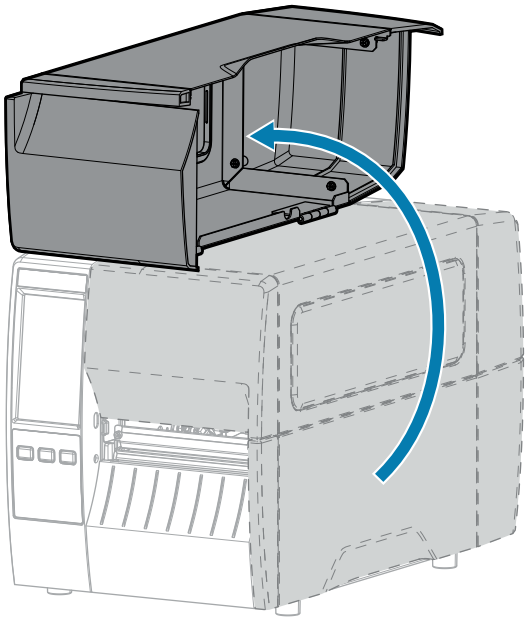

2. Remove and discard any tags or labels that are torn or dirty or that are held by adhesives or tape.

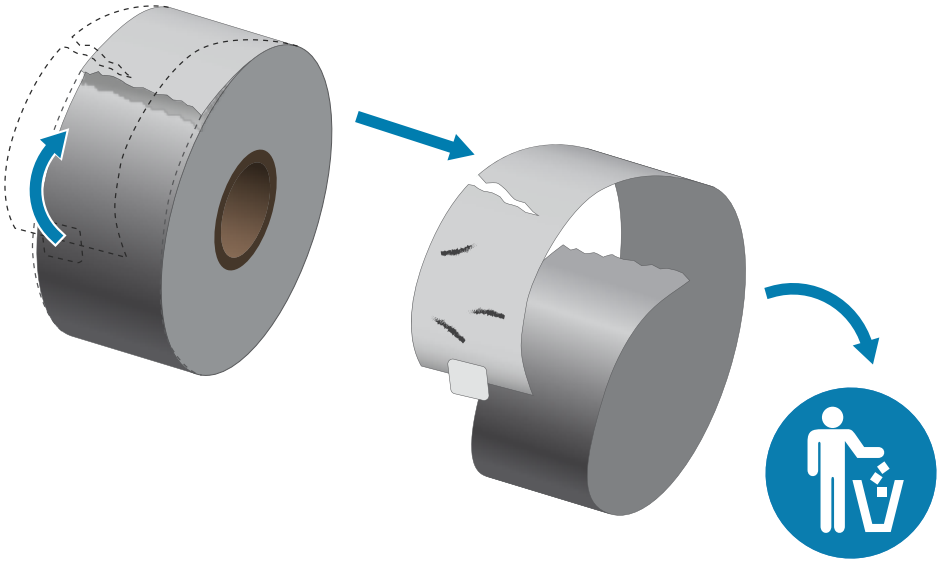

3. Slide out and flip down the media supply guide.

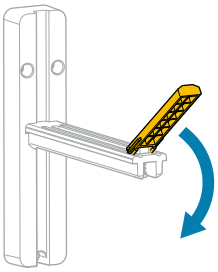

4. Insert roll or fanfold media into the printer.

Type of media	Instructions
Roll media	Place the roll of media on the media supply hanger. Push the roll as far back as it will go. 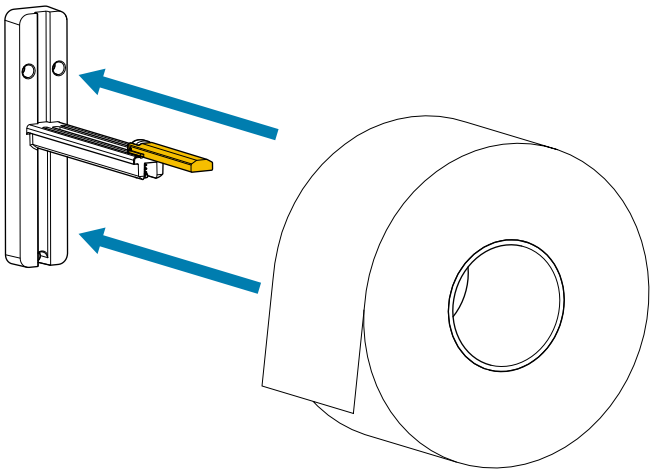

Type of media	Instructions
Fanfold media	**a.** Insert the fanfold media through the rear of the printer. 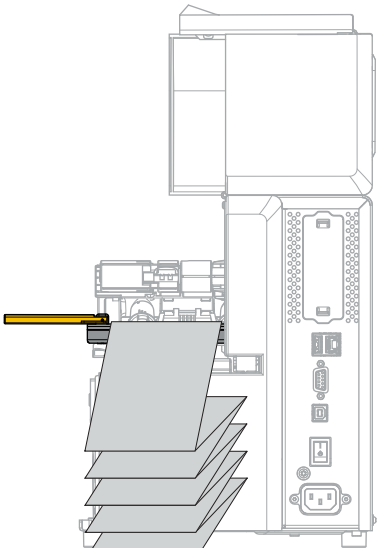 **b.** Drape the media over the media supply hanger. 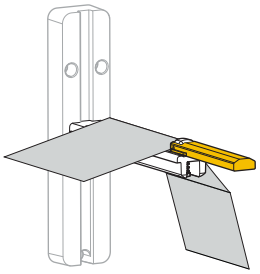

5. Flip up the media supply guide.

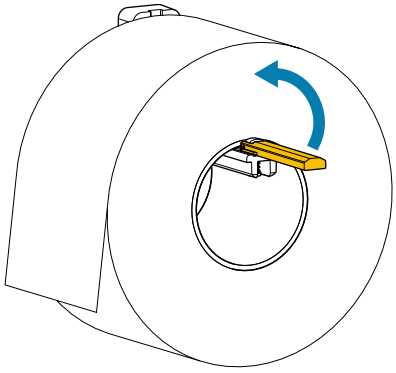

6. Slide in the media supply guide until it touches the edge of the roll.

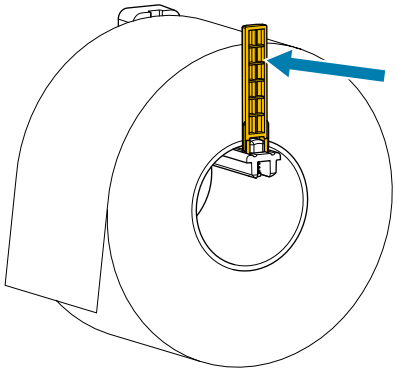

7. Which collection method are you using? (See Determining the Media Handling Method on page 38.)

If using...	Then...
Tear Off 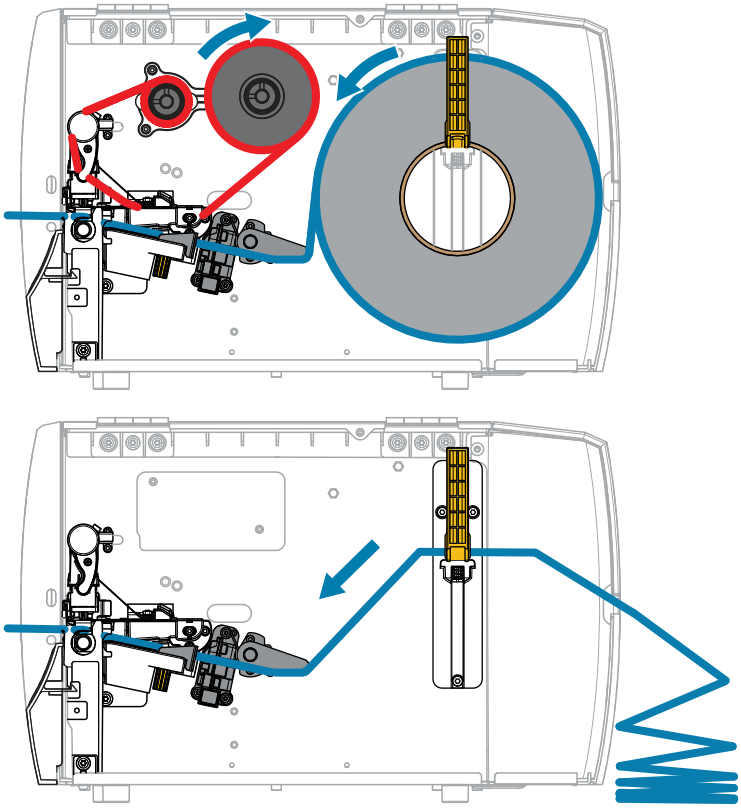	Continue with Using Tear-Off Mode on page 45.
Peel Off (with or without liner take-up)	Continue with Using Peel Mode (with or without Liner Take-Up) on page 48.

If using...	Then...
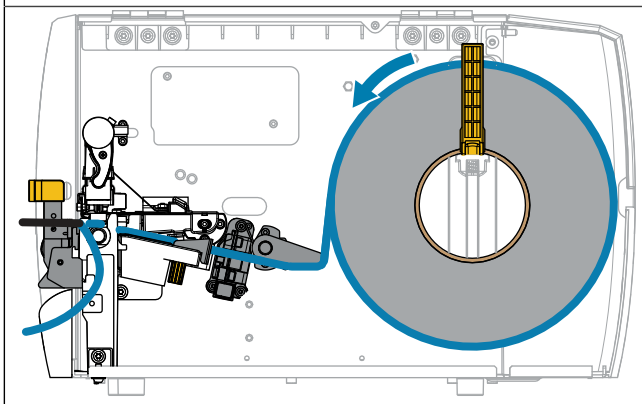 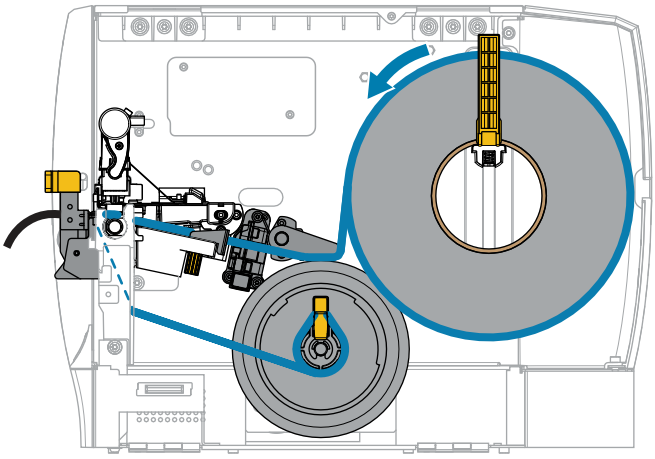	
Cutter or Delayed Cut 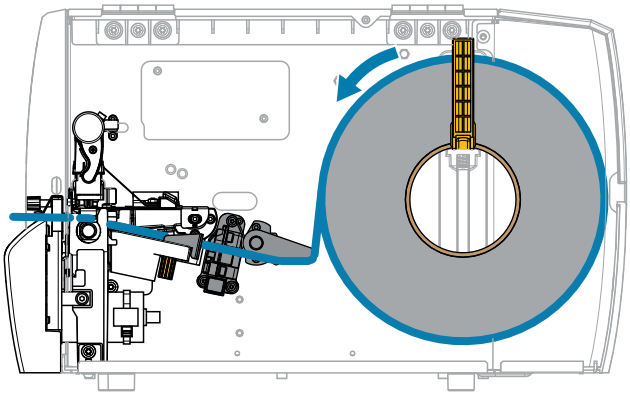	Continue with Using Cutter Mode or Delayed Cut Mode on page 54.

Using Tear-Off Mode

The media loading path is the same for both roll and fanfold media. Roll media is shown in the images in this section.

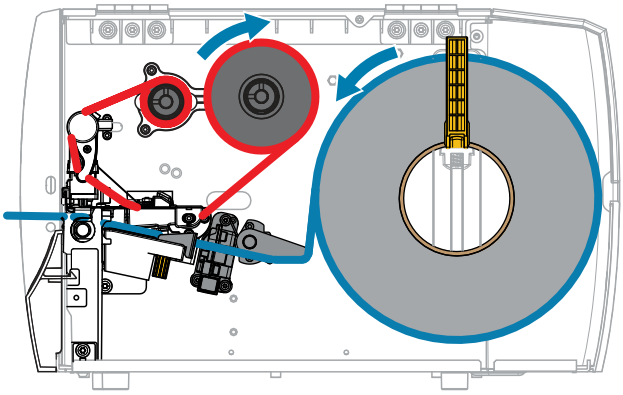

1. Insert media into the printer. See Inserting the Media into the Printer on page 40.
2. Release the printhead assembly.

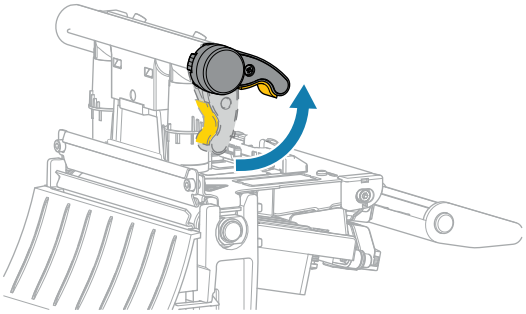

As the printhead lever rotates upward, the printhead assembly pivots upward.

3. Slide the outer media guide all the way out.

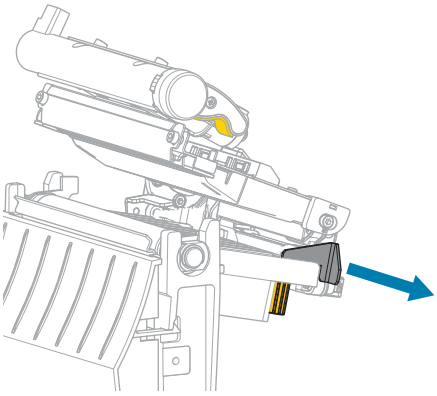

4. Load the media as shown. Make sure that the media passes through the slot in the transmissive media sensor (1) and under the inner media guide (2). The media should just touch the back of the transmissive media sensor slot.

CAUTION—HOT SURFACE: The printhead may be hot and could cause severe burns. Allow the printhead to cool.

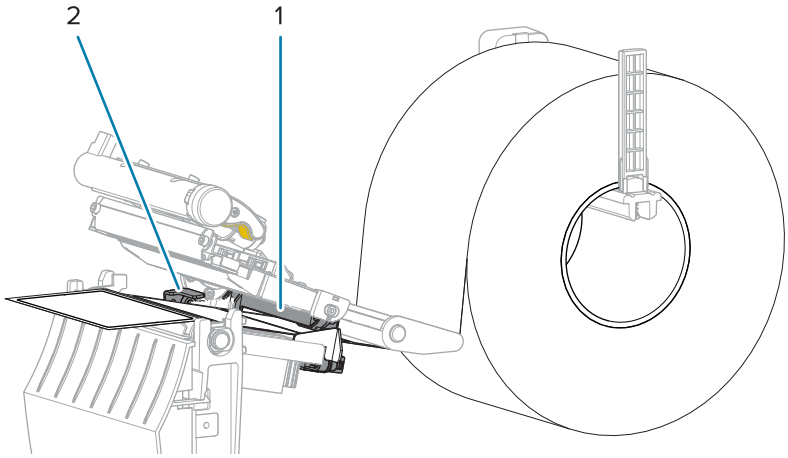

5. Slide in the outer media guide until it just touches the edge of the media.

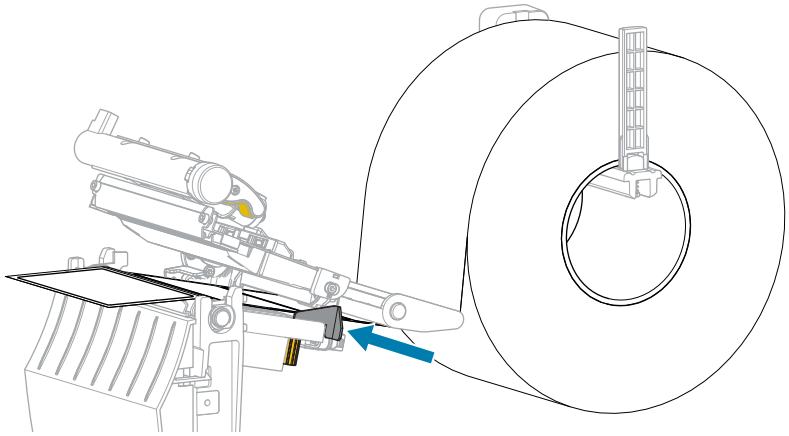

6. Close the printhead assembly.

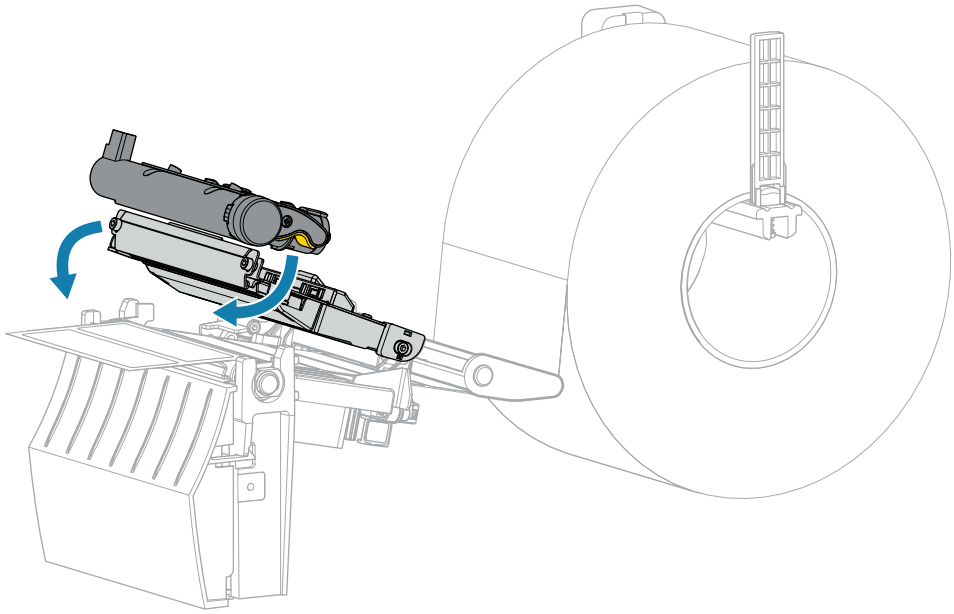

7. Close the media cover.

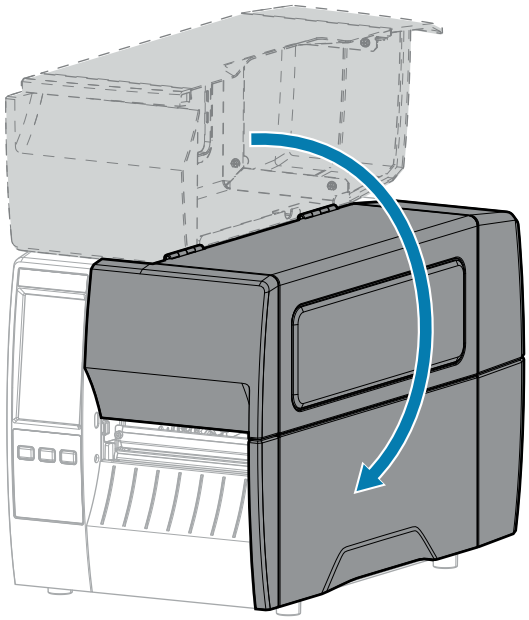

8. Set the printer to Tear Off mode (see Print Menu > Label Position > Collection Method).
9. Press **PAUSE** to exit pause mode and enable printing.

   The printer may perform a label calibration or feed a label, depending on your settings.
10. For optimal results, calibrate the printer. See Calibrating the Ribbon and Media Sensors on page 116.
11. Verify that your printer is able to print a configuration label by holding both the **FEED** and **CANCEL** keys for 2 seconds.

Using Peel Mode (with or without Liner Take-Up)

The media loading path starts the same for both the peel and liner take-up options. The peel option is shown in graphics that apply to both.

Figure 4 Peel Option

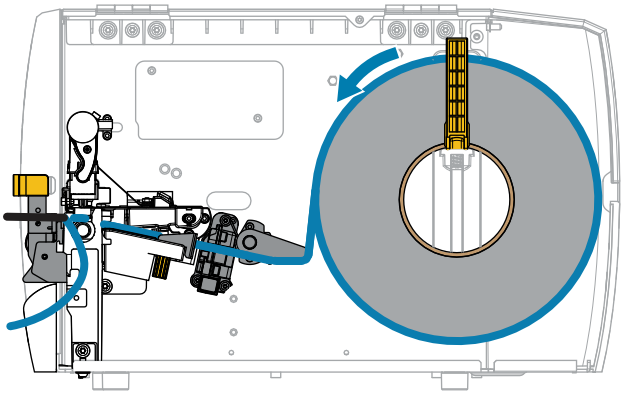

Figure 5 Liner Take-Up Option

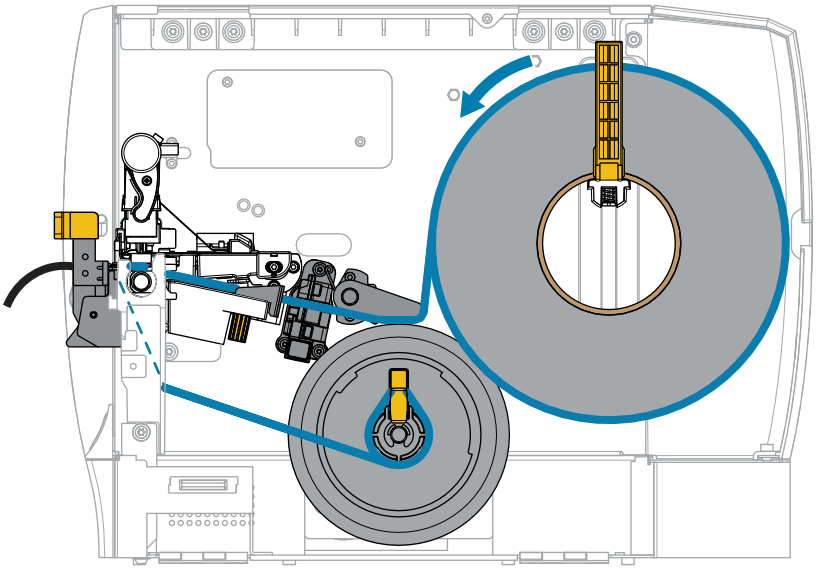

1. Insert media into the printer. See Inserting the Media into the Printer on page 40.

2. Release the printhead assembly.

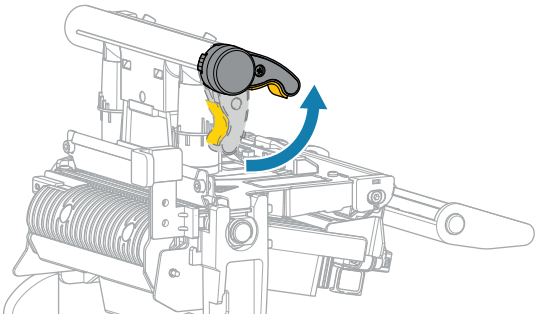

As the printhead lever rotates upward, the printhead assembly pivots upward.

3. Slide the outer media guide all the way out.

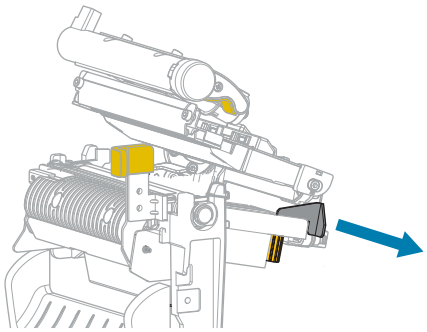

4. Load the media as shown. Make sure that the media passes through the slot in the transmissive media sensor (1) and under the inner media guide (2). The media should just touch the back of the transmissive media sensor slot.

CAUTION—HOT SURFACE: The printhead may be hot and could cause severe burns. Allow the printhead to cool.

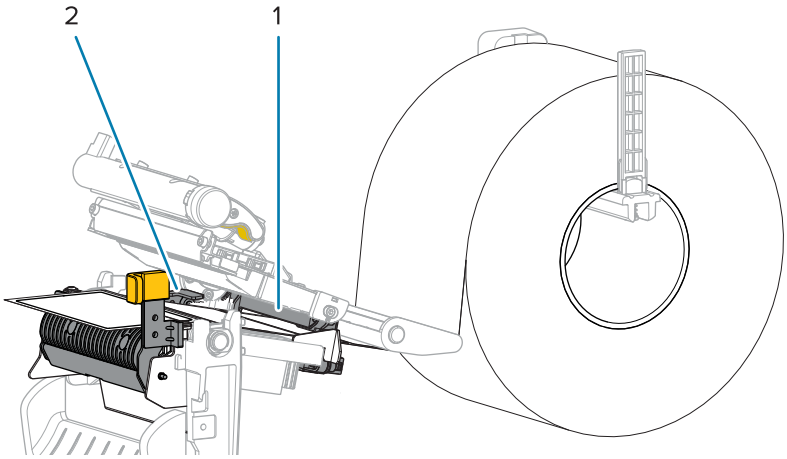

5. Push down the peel-off mechanism release lever to open the peel assembly.

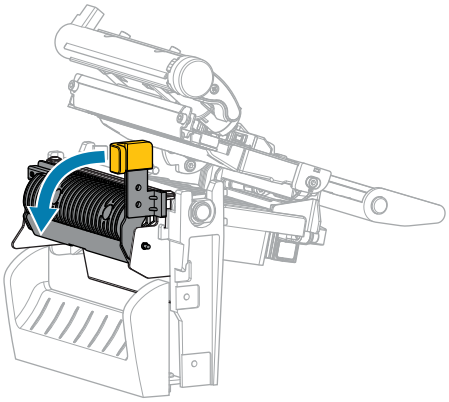

6. Extend approximately 500 mm (18 in.) of media out of the printer. Remove and discard the labels from this exposed media, leaving just the liner.

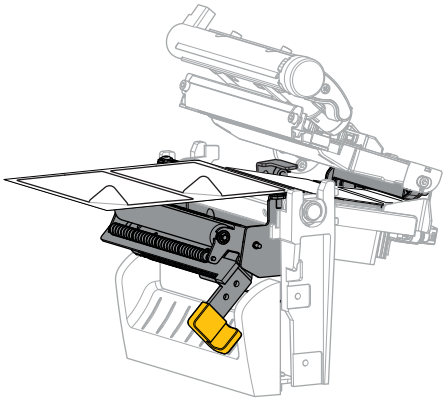

7. Feed the liner behind the peel assembly. Make sure that the end of the liner falls outside of the printer.

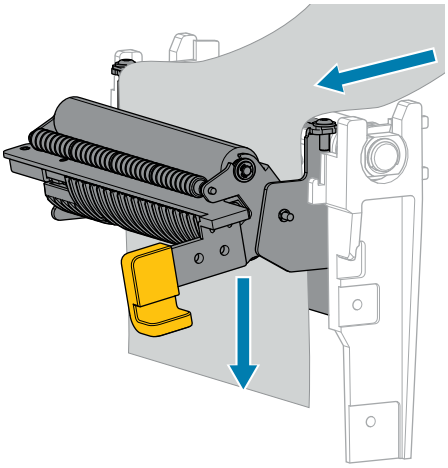

8. Complete this step only if you want to use Peel-Off mode with Liner Take-Up. Your printer must have the Liner Take-Up option installed. If you are not using Liner Take-Up, skip this step.

a) Slide the liner into the slot in the liner take-up spindle.

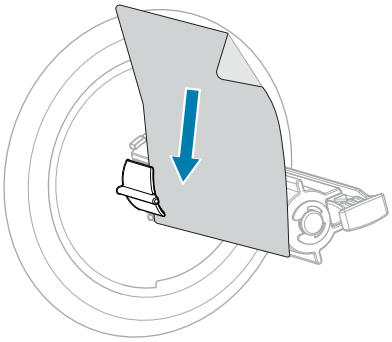

b) Push the liner back until it touches the back plate of the liner take-up spindle assembly.

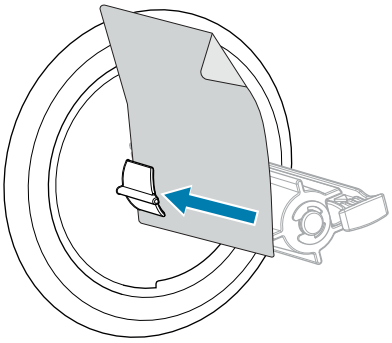

c) Wrap the liner around the liner take-up spindle, and then turn the spindle counterclockwise to tighten the liner.

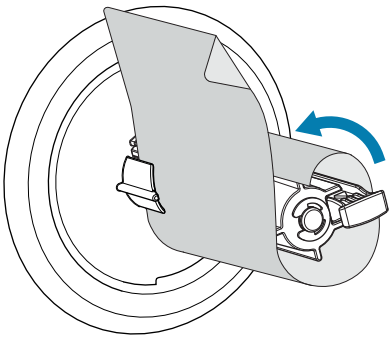

9. Close the peel assembly using the peel-off mechanism release lever.

CAUTION: Use the peel-off mechanism release lever and your right hand to close the peel assembly. Do not use your left hand to assist in closing. The top edge of the peel roller/ assembly could pinch your fingers.

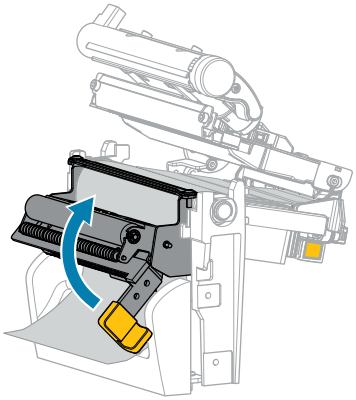

10. Slide in the outer media guide until it just touches the edge of the media.

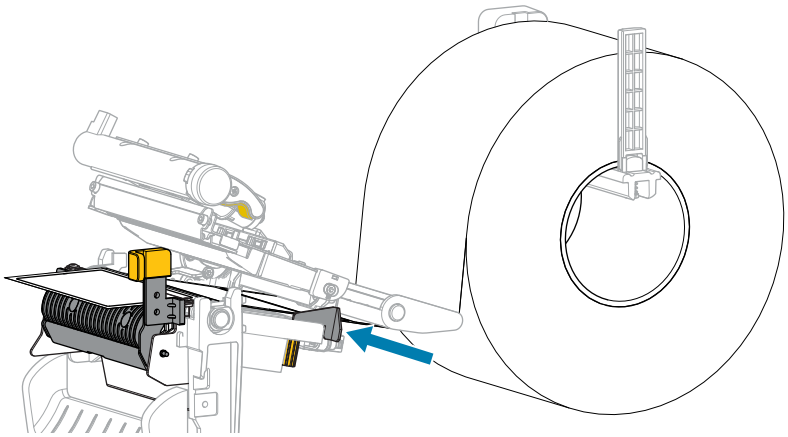

11. Close the printhead assembly.

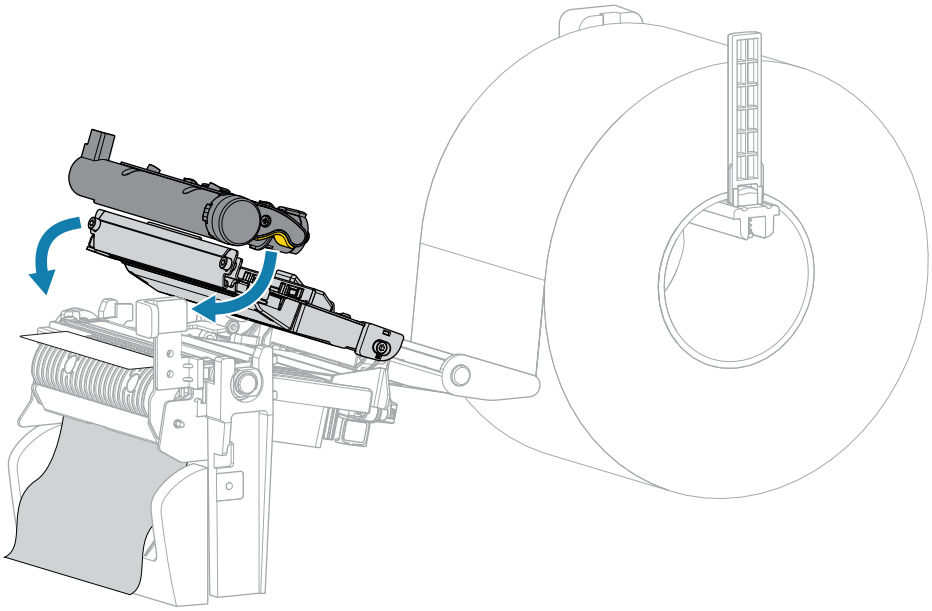

12. Close the media cover.

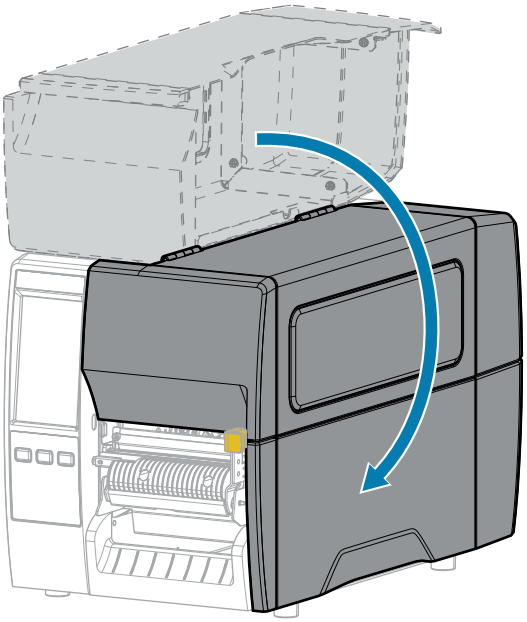

13. Set the printer to Peel Off mode (see Print Menu > Label Position > Collection Method).
14. Press **PAUSE** to exit pause mode and enable printing.

    The printer may perform a label calibration or feed a label, depending on your settings.
15. For optimal results, calibrate the printer. See Calibrating the Ribbon and Media Sensors on page 116.
16. Verify that your printer is able to print a configuration label by holding both the **FEED** and **CANCEL** keys for 2 seconds.

Using Cutter Mode or Delayed Cut Mode

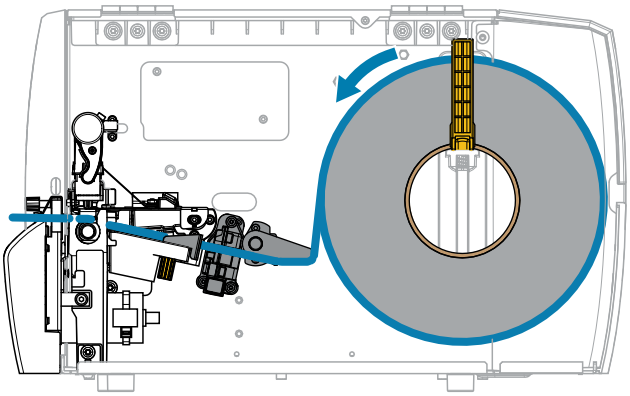

1. Release the printhead assembly.

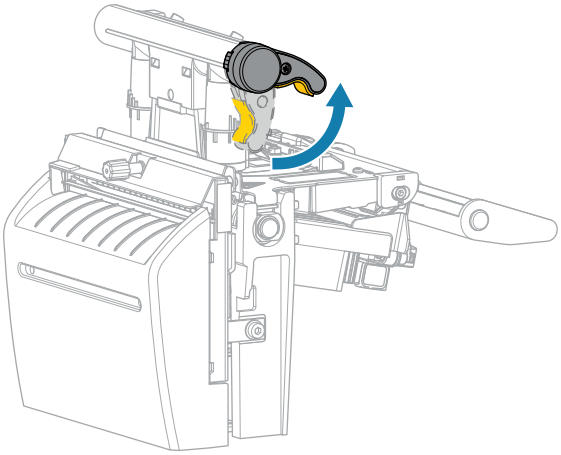

As the printhead lever rotates upward, the printhead assembly pivots upward.

2. Slide the outer media guide all the way out.

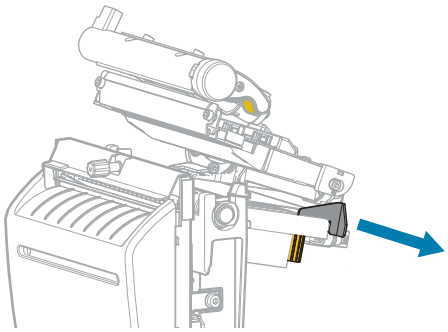

3. Load the media as shown.

a) Make sure that the media passes through the slot in the transmissive media sensor (1) and under the inner media guide (2). The media should just touch the back of the transmissive media sensor slot.

CAUTION—HOT SURFACE: The printhead may be hot and could cause severe burns. Allow the printhead to cool.

b) Feed the media through the cutter.

CAUTION: The cutter blade is sharp. Do not touch or rub the blade with your fingers.

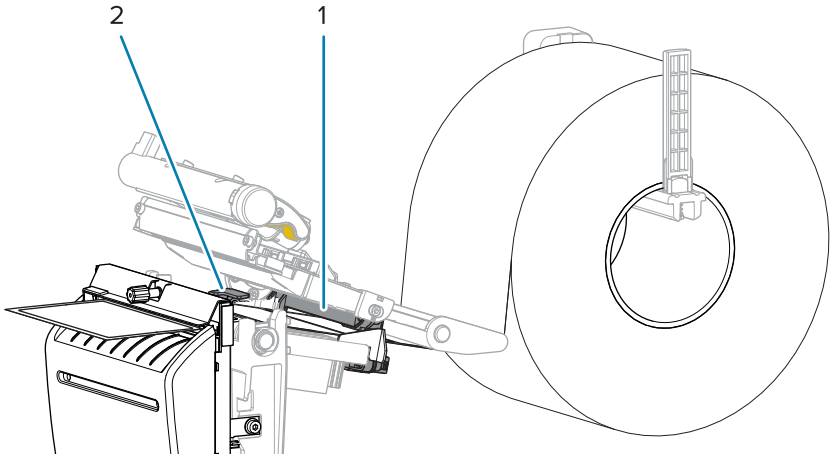

4. Slide in the outer media guide until it just touches the edge of the media.

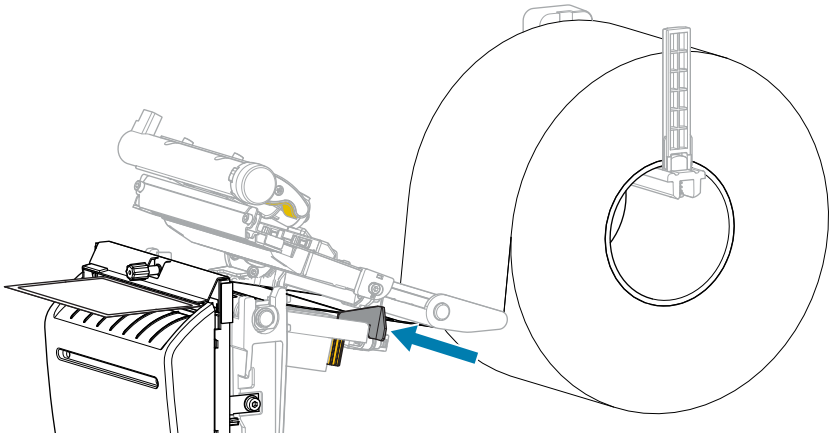

5. Close the printhead assembly.

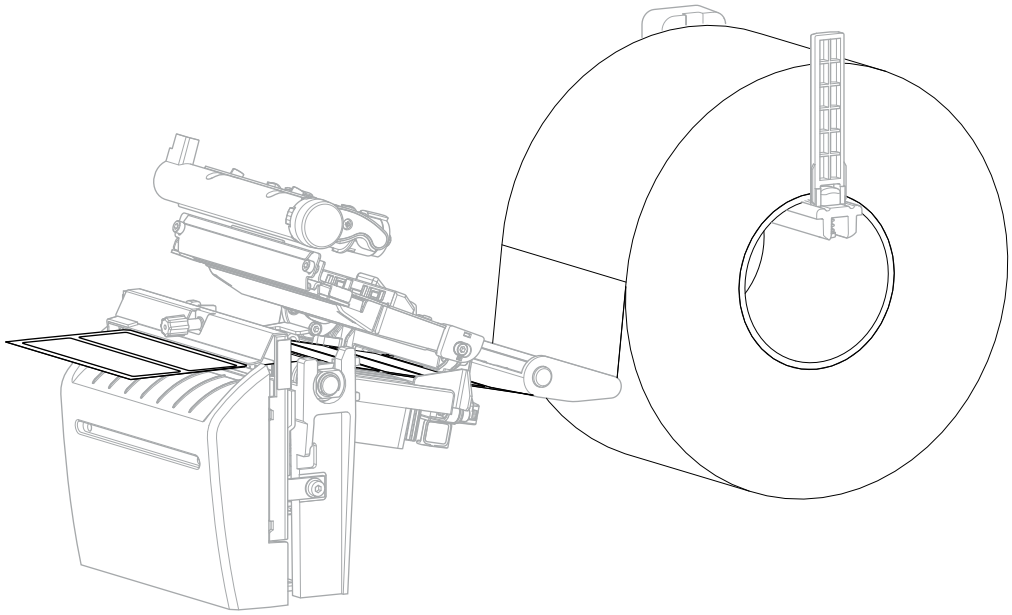

6. If desired, insert the cutter catch tray into the slot on the front of the cutter.

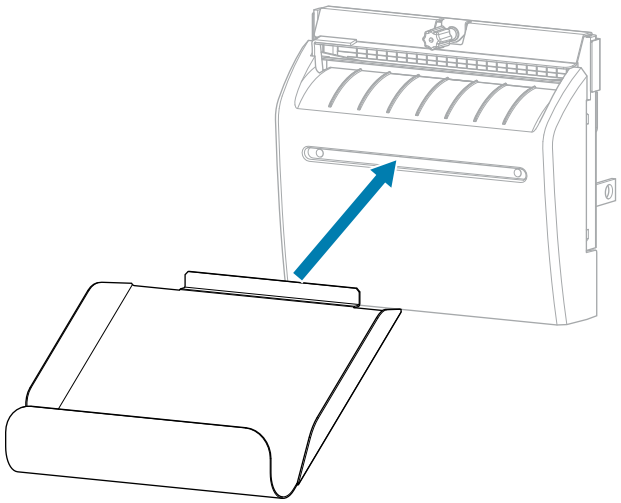

7. Close the media cover.

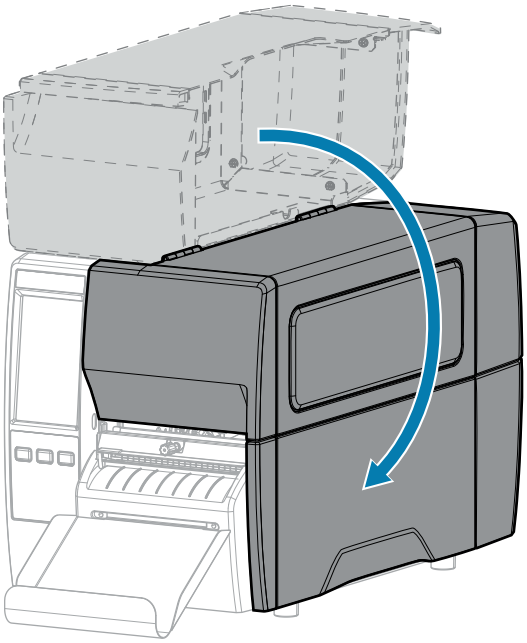

8. Set the printer to Cutter mode (see Print Menu > Label Position > Collection Method).
9. Press **PAUSE** to exit pause mode and enable printing.

   The printer may perform a label calibration or feed a label, depending on your settings.
10. For optimal results, calibrate the printer. See Calibrating the Ribbon and Media Sensors on page 116.
11. Verify that your printer is able to print a configuration label by holding both the **FEED** and **CANCEL** keys for 2 seconds.

    Media loading in Tear-Off mode is complete.

Loading the Ribbon

NOTE: This section applies only to printers that have the Thermal Transfer option installed.

Ribbon is used only with thermal transfer labels. For direct thermal labels, do not load ribbon in the printer. To determine if ribbon must be used with a particular media, see Ribbon on page 14.

IMPORTANT: Use ribbon that is wider than the media to protect the printhead from wear. Ribbon must be coated on the outside.

1. Open the media cover.

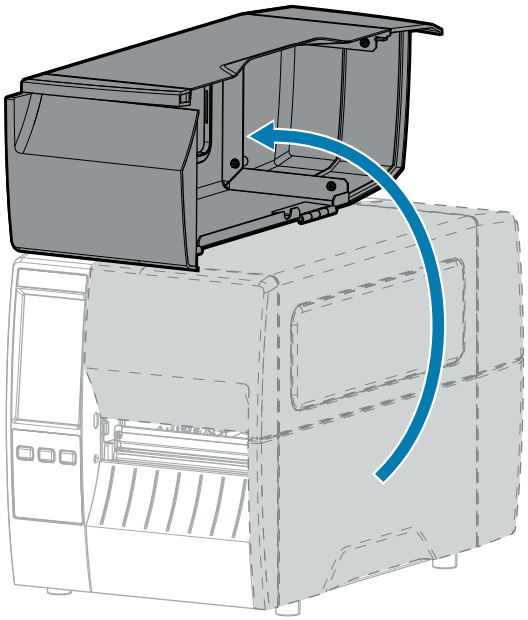

2. Place the roll of ribbon on the ribbon supply spindle with the loose end of the ribbon unrolling as shown. Push the roll back as far as it will go.

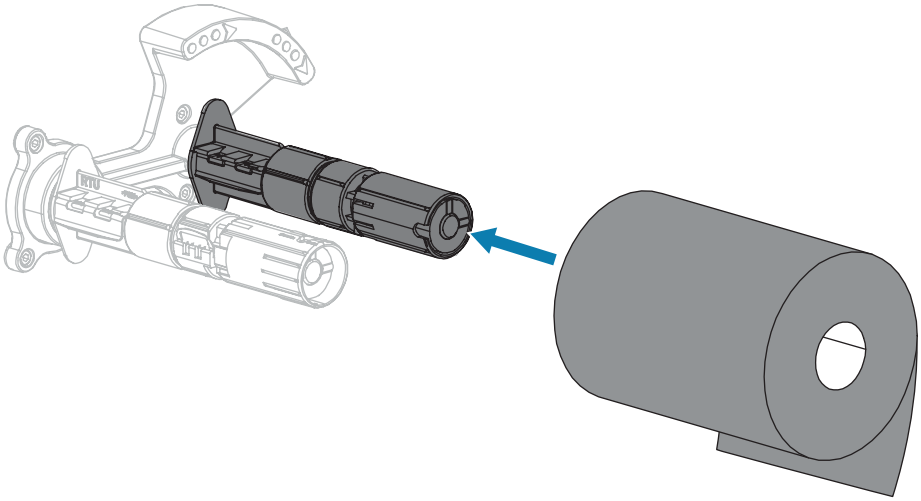

3. Your printer shipped with an empty ribbon core on the ribbon take-up spindle. If this core is no longer there, place an empty ribbon core on the ribbon take-up spindle. Push the core back as far as it will go.

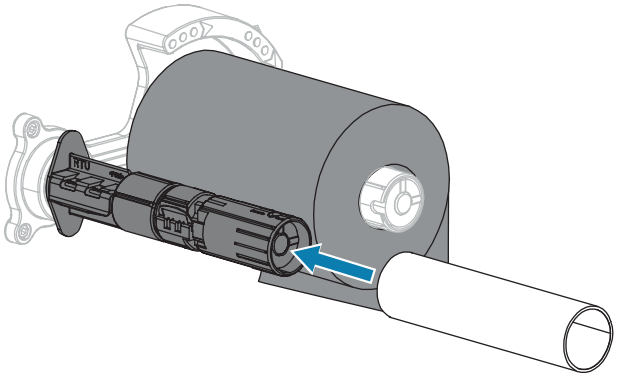

4. Bring the ribbon under the printhead assembly as shown.

NOTE: The printhead may be hot and could cause severe burns. Allow the printhead to cool.

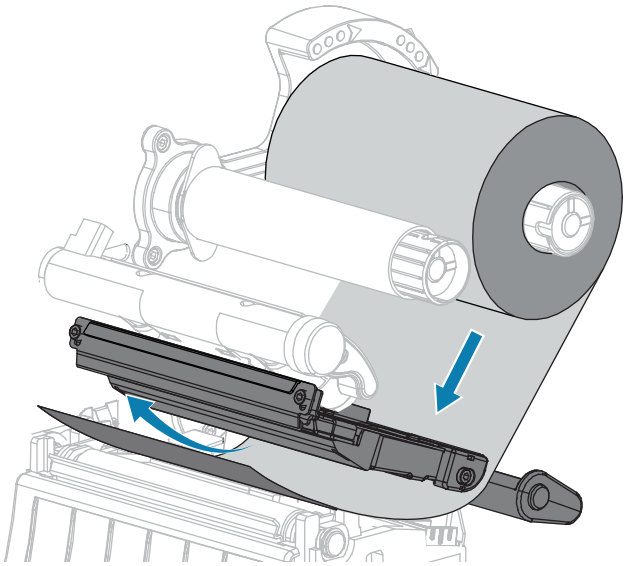

5. With the ribbon tracking as far back as it can under the printhead assembly:
   a) Wrap the ribbon around the core on the ribbon take-up spindle.
   b) Rotate the spindle several turns in the direction shown to tighten and align the ribbon.

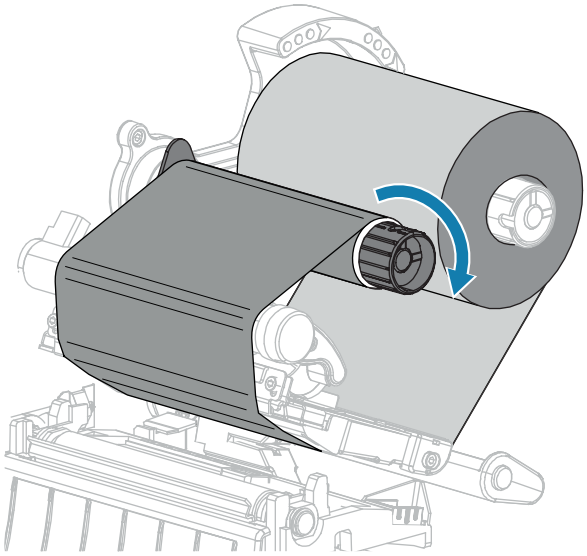

6. If media is already loaded, rotate the printhead-open lever downward until it locks the printhead in place.

   Otherwise, continue with Loading the Media.

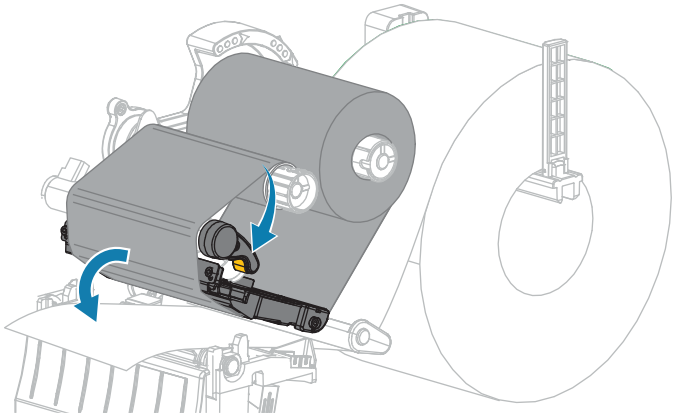

7. Close the media cover.

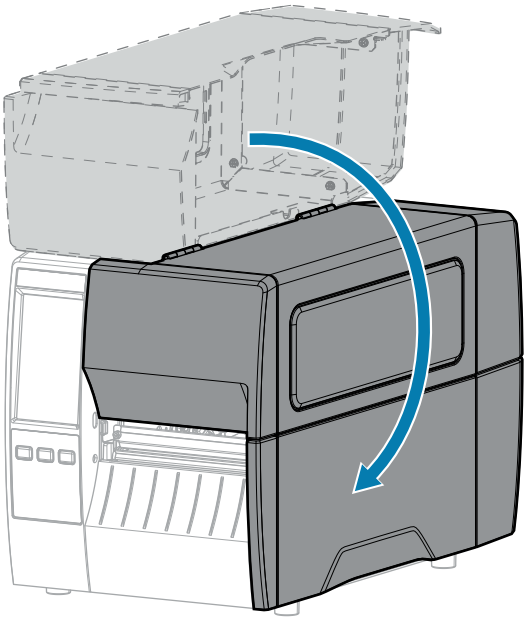

8. If necessary, press **PAUSE** to enable printing.

Running the Print Wizard and Printing a Test Label

The Print Wizard configures the printer, prints test labels, and adjusts print quality based on the results of the test labels.

IMPORTANT: When using the Wizards, do not send data to the printer from the host.

For optimal results, use full-width media running the **Print Wizard** or **Set All Wizard**. If the media is smaller than an image to be printed, the results may be truncated or print across multiple labels.

After you have completed the printer setup procedures and run the printer setup wizard, use this section to print a test label. Printing this label allows you to see if your connection is working and if you need to adjust any of the print settings.

1. On the Home screen, touch **Wizards** > **Print** > **Start Print**.
2. Follow the prompts to specify the following information:
   - print type (Thermal Transfer or Direct Thermal)
   - label type (Continuous, Gap/Notch, or Mark)
   - label width
   - collection method (tear off, peel-off, rewind, cutter, delayed cut, linerless peel, linerless rewind, linerless tear, or applicator)

   After you have specified these, the wizard instructs you to load media and then to place a label over the media sensor.

3. Load media so that a label is over the green light from the media sensor, and then touch the checkmark.

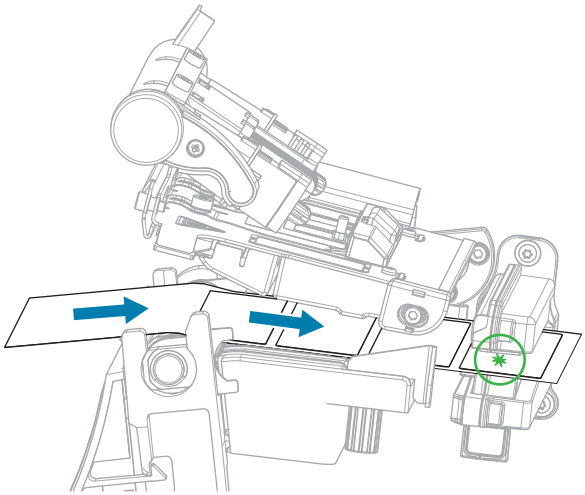

4. At the prompt, close the printhead, and then touch the next checkmark.

   The printer calibrates and then asks if you would like to print a test label.

5. Follow the prompts until the printer completes auto calibration.

6. When asked to print a test label, touch the checkmark.

   A test label similar to this one prints. If your labels are smaller than the image, only a portion of the test label will print.

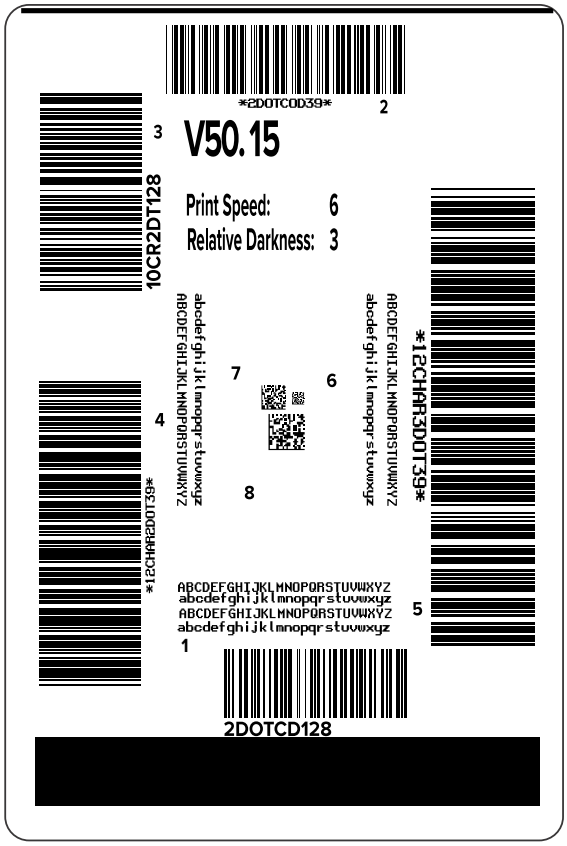

7. Examine the position of the label over the tear bar. If necessary, shift the position of the media over the tear-off bar after printing.
   - If the space between labels falls on the tear bar, continue with the next step.
   - If the space between labels does not fall directly on the tear bar, shift the position of the media over the tear bar after printing.

     Lower numbers move the media into the printer by the specified number of dots (the tear line moves closer to the edge of the label just printed).

     Higher numbers move the media out of the printer (the tear line moves closer to the leading edge of the next label).

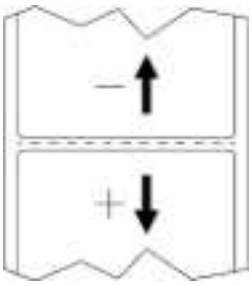

8. Examine the quality of the image on the test label. Is the quality of the barcode and text on the test label acceptable? See Evaluating Barcode Quality on page 140 for assistance.
   - If yes, touch the check mark, and then check what other issues may be affecting your print quality. See Printing or Print Quality Issues on page 157.
   - If no, adjust the print quality manually by changing darkness and speed settings through the printer's menu system, or run the Print Quality Assistance wizard. See Using the Print Quality Assistance Wizard on page 63.

Using the Print Quality Assistance Wizard

1. From the last step of the Print wizard, touch **Print Quality Assistance**.

   The printer prompts for the number of test labels to print. The more labels you choose to print, the more choices that you will have available to decide on label quality. In general, if your test label from the previous wizard was acceptable, a lower number of test labels in this step will probably suffice.
2. Select a number of test labels to print.

   The printer prints the specified number of test labels and prompts you for the preferred test label.
3. Decide which test label is the optimal quality. (Refer to Evaluating Barcode Quality on page 140 for assistance.) If none of the labels are acceptable, use the arrow to back up a screen in the wizard, and select a larger number of test labels.
4. In the list on the display, select the identifier for the test label with the specified quality, and then touch the checkmark.

   The printer changes the darkness and speed to the levels used on the preferred test label.
5. If necessary, see Printing or Print Quality Issues on page 157 to see what other issues may be affecting your print quality.

The print setup procedure is complete.

Installing Label Design Software

Select and install the software that you will use to create label formats for your printer.

One option is ZebraDesigner, which you can download from zebra.com/zebradesigner. You can choose to use ZebraDesigner Essentials for free or purchase ZebraDesigner Professional for a more robust toolset.

Figure 6 Sample ZebraDesigner Essentials Screen

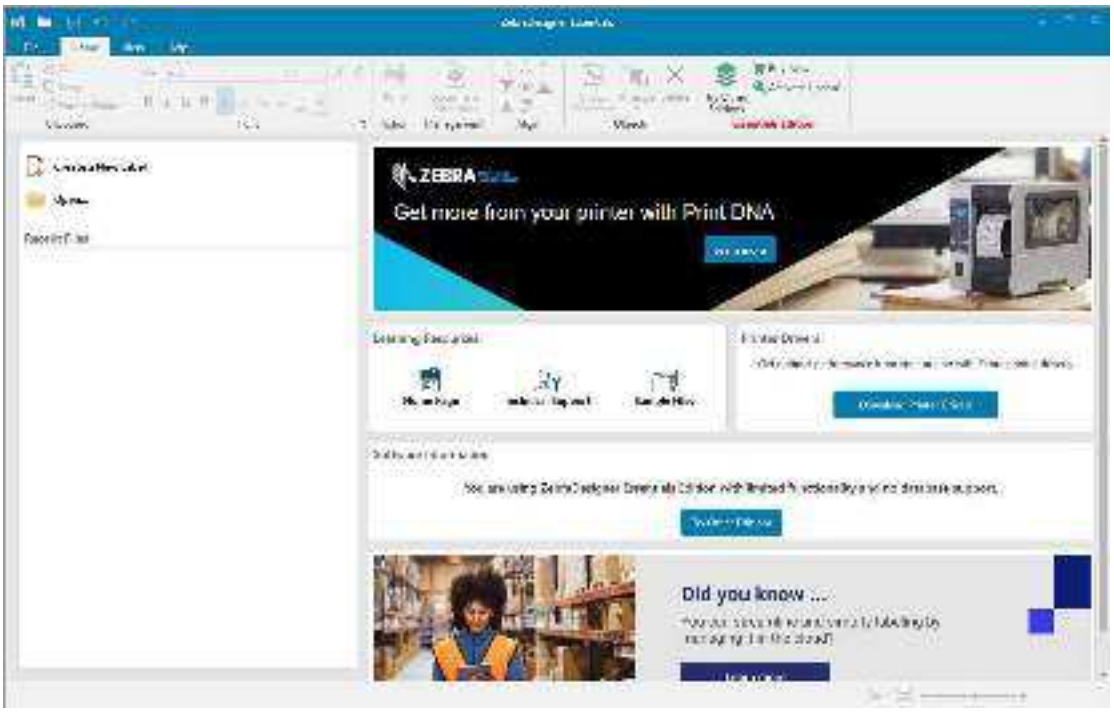

Printer Configuration and Adjustment

This section assists you with configuration of the printer and adjustments to the printer.

Changing Printer Settings

This section presents the printer settings that you can change and identifies tools for changing them.These tools include the following:

- The Windows driver installed previously. (See Changing Printer Settings through the Windows Driver on page 65 for more information.)
- The printer wizards. (See Printer Wizards on page 67.)
- The printer's user menus (See User Menus on page 68 for more information.)
- Zebra Printer Setup Utilities:
  - Windows computers
  - Android devices
  - Apple devices
- ZPL and Set/Get/Do (SGD) commands (See the Zebra Programming Guide for more information.)
- The printer's web pages when the printer has an active wired or wireless print server connection (See the ZebraNet Wired and Wireless Print Servers User Guide for more information.)

Changing Printer Settings through the Windows Driver

1. From the Windows Start Menu, go to **Printers & Scanners**.
2. Click your printer in the list of available printers, and then click **Manage**.

3. Click **Printing Preferences**.

   The ZDesigner window for your printer displays.

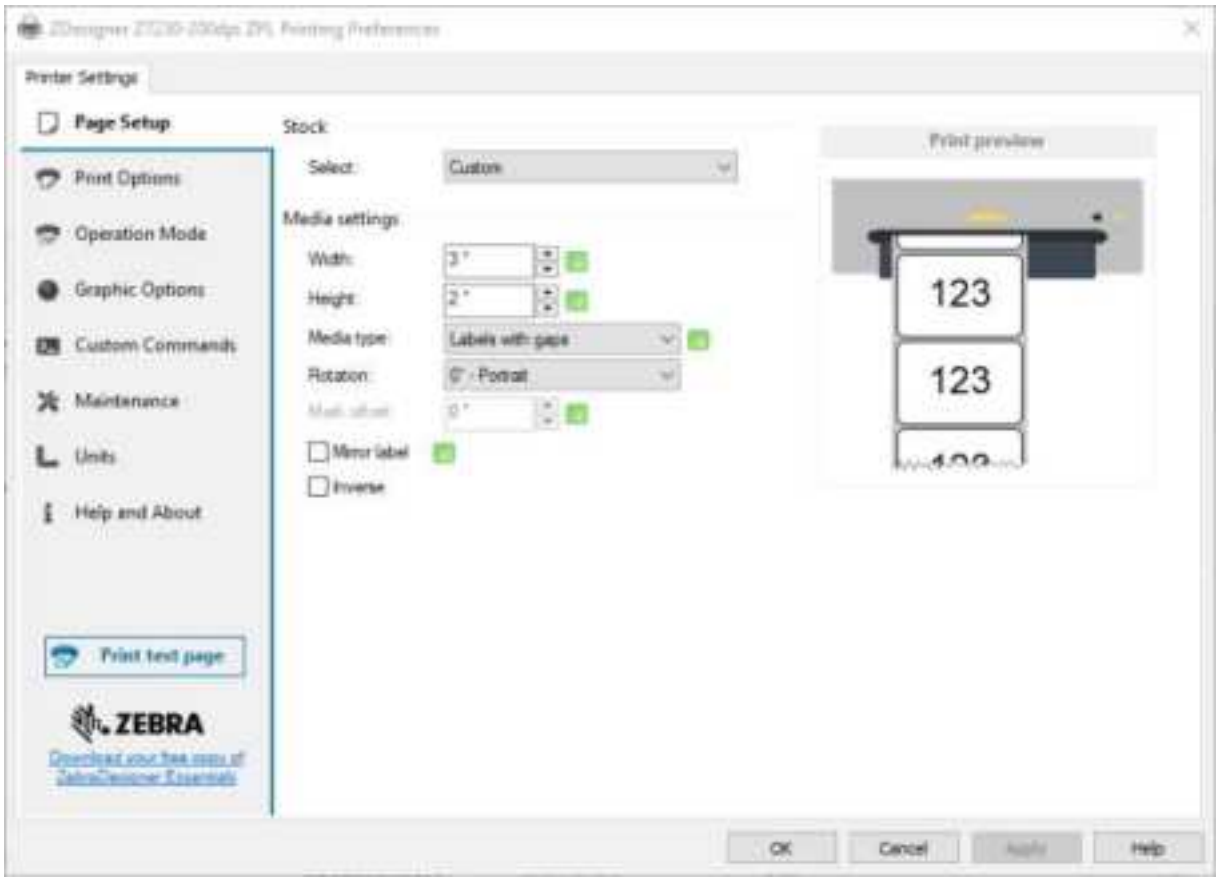

4. Change the settings as desired, and then click **OK**.

Printer Wizards

Printer wizards walk you through the setup process for various printer settings and features.

NOTE: If you purchased your printer in the EMEA region on or after August 1, 2025, go to Modifying or Viewing Secured Features on page 18.

The following wizards are available:

- Set All Wizard—runs all the wizards in sequence.
- System Wizard—sets up non-print related operating system settings.
- Connection Wizard—configures the printer's connectivity options.
- Print Wizard—configures key printing parameters and features. See Running the Print Wizard and Printing a Test Label on page 61.
- RFID Wizard—sets up the RFID subsystem's operations.

On the Home screen, touch **Wizards** to see the available options.

For more information about individual settings set by any of the wizards, see User Menus on page 68.

IMPORTANT:

When using the Wizards, do not send data to the printer from the host.

For optimal results, use full-width media running Print Wizard or Set All Wizards. If the media is shorter than an image to be printed, the image may be truncated or print across multiple labels.

User Menus

Use the printer's user menus to configure the printer as needed.

For detailed information on each of these menus, see System Menu on page 69, Connection Menu on page 80, Print Menu on page 95, RFID Menu on page 106, and Storage Menu on page 113.

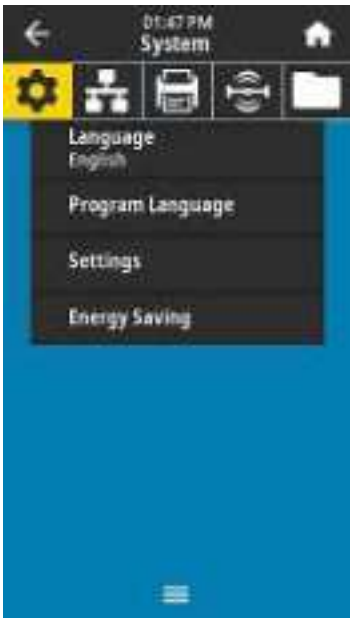

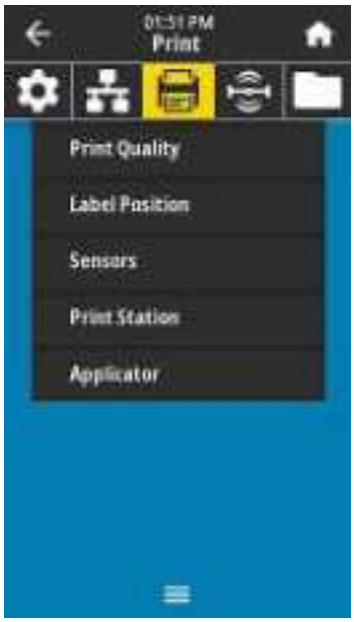

You can modify printer settings through the user menus or optionally using the methods listed below. (The user menu descriptions in this section include information on these optional methods where applicable.)

- ZPL and Set/Get/Do (SGD) commands. (See the Zebra Programming Guide at zebra.com/manuals for more information.)

- The printer's web pages, in cases where the printer has an active wired or wireless print server connection. (See the ZebraNet Wired and Wireless Print Servers User Guide at zebra.com/manuals for more information.)

You can also use the printer's task wizards to change some settings (see Printer Wizards on page 67).

System Menu

Menu Display	Menu Option Description	
	System > **Language** If necessary, change the language that the printer displays. This change affects the words shown on the following: • the Home screen • the user menus • error messages • the printer configuration label, the network configuration label, and other labels that you can select to print through the user menus	
	Accepted values:	ENGLISH, SPANISH, FRENCH, GERMAN, ITALIAN, NORWEGIAN, PORTUGUESE, SWEDISH, DANISH, DUTCH, FINNISH, CZECH, JAPANESE, KOREAN, ROMANIAN, RUSSIAN, POLISH, SIMPLIFIED CHINESE, TRADITIONAL CHINESE The selections for this parameter are displayed in the actual languages to make it easier for you to find one that you are able to read.
	Related ZPL command(s):	`^KL`
	SGD command used:	`display.language`
	Printer web page:	**View and Modify Printer Settings** > **General Setup** > **Language**

Menu Display	Menu Option Description	
	System > **Program Language** > **Diagnostic Mode** Use this diagnostics tool to make the printer output hexadecimal values for all data received by the printer. (For more information, see Using Communication Diagnostics Mode on page 146.)	
	Accepted values:	`PRINT`—The printer prints the text and hexadecimal representation of data bytes received instead of printing the formatted labels which that data might represent. `E: Drive`—The printer saves the information to its E: drive. `USB Host`—The printer saves the information to a USB Host memory device if one is present. `OFF`—The printer's normal operating mode. Cycling power also returns the printer to `OFF` mode. **NOTE:** This command does not capture a network packet trace.
	Related ZPL command(s):	`~JD` to enable `~JE` to disable
	SGD command used:	`input.capture`
	Control panel key(s):	Hold **PAUSE** + **FEED** for 2 seconds when the printer is in the Ready state.

Menu Display	Menu Option Description	
	System > **Program Language** > **Command Language** **NOTE:** Not all values are accepted on all printers. Use the `! U1 getvar "allcv"` command to see the range of values that your printer supports. Values other than those listed may be available depending on the firmware version being used. **NOTE:** `"zpl"` and `"hybrid_xml_zpl"` are equivalent. When the setvar is set to `"zpl"`, the getvar result will always be `"hybrid_xml_zpl"`. Select the appropriate command language.	
	SGD command used:	`device.languages`
	System > **Program Language** > **Emulation** If any Emulation apps are installed on your printer, you may view or enable/disable them from this user menu. For more information, go to the User Guide for the appropriate Emulation, or contact your local reseller.)	

Menu Display	Menu Option Description	
	System > **Program Language** > **ZBI** Zebra Basic Interpreter (ZBI 2.0™) is a programming option that may be purchased for your printer. If you would like to purchase this option, contact your Zebra reseller for more information. If ZBI programs have been downloaded to your printer, you may select one to run using this menu item. If no program exists on your printer, NONE is listed. When ZBI programs have been downloaded but none are running, the printer lists all available programs. To run one of them, touch **Run** (highlighted in white) under the program name. After a program is running, only that program is listed. Touch **Stop** (highlighted in white) to end the program. 	
	SGD command used:	`zbi.key`—Shows if a valid ZBI 2.0 license is installed on the printer. `zbi.enable`—Shows if the ZBI 2.0 option is enabled or disabled on the printer. **NOTE:** `zbi.key` must be set to `"enabled"` and `zbi.enable` must be set to `"on"` to be able to use the ZBI feature.

Menu Display	Menu Option Description	
	System > **Settings** > **Display Time Format** Select the time format used by the printer.	
	Accepted values:	12-Hour, 24-Hour
	SGD command used:	`device.idle_display_value`
	System > **Settings** > **Password Level** Select the level of password protection for user menu items.	
	Accepted values:	Selected, All, None
	SGD command used:	`display.password.level`

Menu Display	Menu Option Description	
	System > **Settings** > **Set Password** **For printers purchased in the EMEA region after August 1, 2025:** Out of the box, the printer requires the configuration of a front panel password/PIN before you can modify certain settings through the user menus. This front panel password is different than the Protected Mode password, which also must be configured. For additional information, go to zebra.com/asr. **For all other printers:** Set a new printer password for menu items protected by the previous parameter. The default printer password is `1234`.	
	Accepted values:	`0000` to `9999` (four digits)
	Related ZPL command(s):	`^KP`
	System > **Settings** > **Power Up Action** Set the action for the printer to take during the power-up sequence.	
	Accepted values:	CALIBRATE—Adjusts sensor levels and thresholds, determines the label length, and feeds the media to the next web. FEED—Feeds the labels to the first registration point. LENGTH—Determines the label length using current sensor values, and feeds the media to the next web. NO MOTION—Tells the printer not to move the media. You must manually ensure that the web is positioned correctly, or press feed to position the next web. SHORT CAL—Sets the media and web thresholds without adjusting sensor gain, determines the label length, and feeds the media to the next web.
	Related ZPL command(s):	`^MF`
	SGD command used:	`ezpl.power_up_action`

Menu Display	Menu Option Description	
	Printer web page:	**View and Modify Printer Settings** > **Calibration**
	System > **Settings** > **Head Close Action** Set the action for the printer to take when you close the printhead.	
	Accepted values:	CALIBRATE—Adjusts sensor levels and thresholds, determines the label length, and feeds the media to the next web. FEED—Feeds the labels to the first registration point. LENGTH—Determines the label length using current sensor values, and feeds the media to the next web. NO MOTION—Tells the printer not to move the media. You must manually ensure that the web is positioned correctly, or press feed to position the next web. SHORT CAL—Sets the media and web thresholds without adjusting sensor gain, determines the label length, and feeds the media to the next web.
	Related ZPL command(s):	`^MF`
	SGD command used:	`ezpl.head_close_action`
	Printer web page:	**View and Modify Printer Settings** > **Calibration**

Menu Display	Menu Option Description	
	System > **Settings** > **Batch Counter** Sets whether batch counters will be displayed on the printer's control panel.	
	Accepted values:	Yes, No
	SGD command used:	`display.batch_counter`
	System > **Settings** > **Screen Calibration** Touch each crosshair to calibrate the screen.	

Menu Display	Menu Option Description	
	System > **Settings** > **Restore Defaults** Restore specific printer, print server, and network settings back to the factory defaults. Use care when loading defaults because you will need to reload all settings that you changed manually. This menu item is available through two user menus with different default values for each. **NOTE:** For printers with Protected Mode enabled, you cannot modify this setting from the front panel. For more information, refer to the Zebra Link-OS PrintSecure Printer Administration Guide.	
	Accepted values:	PRINTER—Restores all printer settings other than the network settings back to the factory defaults. Use care when loading defaults because you will need to reload all settings that you changed manually. NETWORK—Reinitializes the printer's wired or wireless print server. With a wireless print server, the printer also re-associates with your wireless network. LAST SAVED—Loads settings from the last permanent save.
	Related ZPL command(s):	PRINTER— `^JUF` NETWORK— `^JUN` LAST SAVED— `^JUR`
	Control panel key(s):	PRINTER—Hold **FEED** + **PAUSE** during printer power-up to reset the printer parameters to factory values. NETWORK—Hold **CANCEL** + **PAUSE** during printer power-up to reset the network parameters to factory values. LAST SAVED—N/A
	Printer web page:	PRINTER—**View and Modify Printer Settings** > **Restore Default Configuration** NETWORK—**Print Server Settings** > **Reset Print Server** LAST SAVED—**View and Modify Printer Settings** > **Restore Saved Configuration**

Menu Display	Menu Option Description	
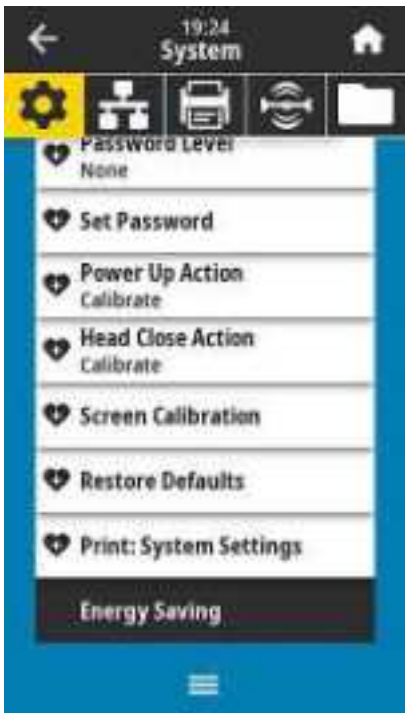	**System** > **Settings** > **Print: System Settings** Prints a printer configuration label. The following is a sample label. PRINTER CONFIGURATION Zebra Technologies ZTC ZT400-203dpi ZPL XXXXXX-XX-XXXX 10..... LCD CONTRAST +10..... DARKNESS 2.0 IPS..... PRINT SPEED +000..... TEAR OFF TEAR OFF..... PRINT MODE GAP/NOTCH..... MEDIA TYPE REFLECTIVE..... SENSOR SELECT 832..... PRINT WIDTH 1422..... LABEL LENGTH ..... PRINT HEAD ID 39.01N 992MM..... MAXIMUM LENGTH NOT CONNECTED..... USB COMM. BIDIRECTIONAL..... PARALLEL COMM. RS232..... SERIAL COMM. 2400..... BAUD 8 BITS..... DATA BITS NONE..... PARITY XON/XOFF..... HOST HANDSHAKE NONE..... PROTOCOL NORMAL MODE..... COMMUNICATIONS (~) 7EH..... CONTROL PREFIX (^) 5EH..... FORMAT PREFIX (,) 2CH..... DELIMITER CHAR ZPL II..... ZPL MODE CALIBRATION..... MEDIA POWER UP CALIBRATION..... HEAD CLOSE DEFAULT..... BACKFEED +000..... LABEL TOP +0000..... LEFT POSITION DISABLED..... REPRINT MODE 001..... WEB SENSOR 004..... MEDIA SENSOR 255..... TAKE LABEL 027..... MARK SENSOR 027..... MARK MED SENSOR 102..... TRANS GAIN 000..... TRANS BASE 100..... TRANS LED 060..... MARK LED DPCSWFXM..... MODES ENABLED ..... MODES DISABLED 203 DPI FULL..... RESOLUTION V72.18.12P15107 <=. FIRMWARE 1.3..... XML SCHEMA 8.4.1 255..... HARDWARE ID NONE..... OPTION BOARD 122880K.....E: RAM 65536K.....E: ONBOARD FLASH NONE..... FORMAT CONVERT FW VERSION..... IDLE DISPLAY 07/20/12..... RTC DATE 02:37..... RTC TIME DISABLED..... ZBI 2.1..... ZBI VERSION READY..... ZBI STATUS 15.110 IN..... NONRESET CNTR 15.110 IN..... RESET CNTR1 15.110 IN..... RESET CNTR2 38.378 CM..... NONRESET CNTR 38.378 CM..... RESET CNTR1 38.378 CM..... RESET CNTR2 FIRMWARE IN THIS PRINTER IS COPYRIGHTED	
	Related ZPL command(s):	`~WC`
	Control panel key(s):	Do one of the following:* • Hold **CANCEL** during printer power-up. (Formerly called a CANCEL self test.) • Hold **FEED** + **CANCEL** for 2 seconds when the printer is in the Ready state. **NOTE:** * Prints a printer configuration label and a network configuration label.

Menu Display	Menu Option Description	
	Printer web page:	**View and Modify Printer Settings** > **Print Listings on Label** * **NOTE:** * Prints a printer configuration label and a network configuration label.
	System > **Energy Saving** > **Energy Star** When Energy Star mode is enabled, the printer goes into a “sleep” mode after a timeout period, thereby lowering power consumption. Press any button on the control panel to bring the printer back to an active state.	
	Accepted values:	ON, OFF
	SGD command used:	`power.energy_star.enable` `power.energy_star_timeout`(to set the amount of idle time before Energy Star is invoked)

Connection Menu

NOTE: For printers purchased in the EMEA region after August 1, 2025, certain connectivity options are disabled by default. To enable these options, refer to the Zebra Link-OS PrintSecure Printer Administration Guide.

Menu Display	Menu Option Description	
	Connection > **Networks** > **Reset Network** This option resets the wired or wireless print server and saves any changes that you made to any network settings. **IMPORTANT:** You must reset the print server to allow changes to the network settings to take effect. **NOTE:** For printers with Protected Mode enabled, you cannot modify this setting from the front panel. For more information, refer to the Zebra Link-OS PrintSecure Printer Administration Guide.	
	Related ZPL command(s):	`~WR`
	Printer web page:	**Print Server Settings** > **Reset Print Server**
	Connection > **Networks** > **Primary Network** View or modify whether the wired or wireless print server is considered primary. You may select which one is primary.	
	Accepted values:	Wired, WLAN
	Related ZPL command(s):	`^NC`
	SGD command used:	`ip.primary_network`

Menu Display	Menu Option Description	
	Connection > **Networks** > **IP Port** This printer setting refers to the internal wired print servers port number that the TCP print service is listening on. Normal TCP communications from the host should be directed to this port.	
	SGD command used:	`ip.port`
	Printer web page:	**View and Modify Printer Settings** > **Network Communications Setup** > **TCP/IP Settings**
	Connection > **Networks** > **IP Alternate Port** This command sets the port number of the alternate TCP port. **NOTE:** Print servers supporting this command will monitor both the primary port and the alternate port for connections at the same time. **NOTE:** For printers with Protected Mode enabled, you cannot modify this setting from the front panel. For more information, refer to the Zebra Link-OS PrintSecure Printer Administration Guide.	
	SGD command used:	`ip.port_alternate`
	Printer web page:	**View and Modify Printer Settings** > **Network Communications Setup** > **TCP/IP Settings**

Menu Display	Menu Option Description
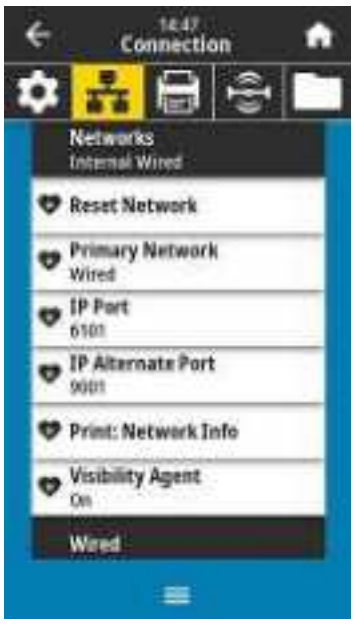	**Connection** > **Networks** > **Print: Network Info** Prints the settings for any print server or Bluetooth device that is installed. The following is a sample label.
	Related ZPL command(s): `~WL`
	Control panel key(s): Do one of the following:* • Hold **CANCEL** during printer power-up. (Formerly called a CANCEL self test.) • Hold **FEED** + **CANCEL** for 2 seconds when the printer is in the Ready state.
	Printer web page: **View and Modify Printer Settings** > **Print Listings on Label** *
	NOTE: * Prints a printer configuration label and a network configuration label.

Menu Display	Menu Option Description
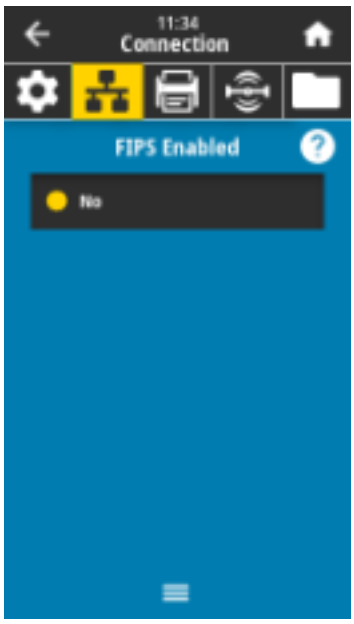	**Connection** > **Networks** > **FIPS Enabled** This setting cannot be modified on this printer.
	Connection > **Networks** > **Visibility Agent** When the printer is connected to a wired or wireless network, it will attempt to connect to Zebra's Asset Visibility Service via the Cloud-based Zebra Printer Connector using an encrypted, certificate-authenticated web socket connection. The printer sends Discovery Data and Settings and Alerts Data. Data printed via any label formats is NOT transmitted. To opt out of this feature, disable this setting. (For more information, see the "Opting Out of the Asset Visibility Agent" application note at zebra.com.) **NOTE:** For printers with Protected Mode enabled, you cannot modify this setting from the front panel. For more information, refer to the Zebra Link-OS PrintSecure Printer Administration Guide. Accepted values: ON, OFF SGD command used: `weblink.zebra_connector.enable` Printer web page: **View and Modify Printer Settings** > **Network Configuration** > **Cloud Connect Settings**

Menu Display	Menu Option Description	
	Connection > **Wired** > **Wired IP Protocol** This parameter indicates if the user (permanent) or the server (dynamic) selects the wired print server's IP address. When a dynamic option is chosen, this parameter tells the method(s) by which this print server receives the IP address from the server. **IMPORTANT:** You must reset the print server to allow changes to the network settings to take effect. (See Connection > Networks > Reset Network.) **NOTE:** For printers with Protected Mode enabled, you cannot modify this setting from the front panel. For more information, refer to the Zebra Link-OS PrintSecure Printer Administration Guide.	
	Accepted values:	ALL, GLEANING ONLY, RARP, BOOTP, DHCP, DHCP & BOOTP, PERMANENT
	Related ZPL command(s):	`^ND`
	SGD command used:	`internal_wired.ip.protocol`
	Printer web page:	**View and Modify Printer Settings** > **Network Communications Setup** > **TCP/IP Settings**
	Connection > **Wired** > **Wired IP Address** View and, if necessary, change the printer's wired IP address. To save changes to this setting, set Connection > Wired > Wired IP Protocol to **PERMANENT**, and then reset the print server (see Connection > Networks > Reset Network). **NOTE:** For printers with Protected Mode enabled, you cannot modify this setting from the front panel. For more information, refer to the Zebra Link-OS PrintSecure Printer Administration Guide.	
	Accepted values:	000 to 255 for each field
	Related ZPL command(s):	`^ND`
	SGD command used:	`internal_wired.ip.addr`
	Printer web page:	**View and Modify Printer Settings** > **Network Communications Setup** > **TCP/IP Settings**

Menu Display	Menu Option Description	
	Connection > **Wired** > **Wired Subnet** View and, if necessary, change the wired subnet mask. To save changes to this setting, set Connection > Wired > Wired IP Protocol to **PERMANENT**, and then reset the print server (see Connection > Networks > Reset Network). **NOTE:** For printers with Protected Mode enabled, you cannot modify this setting from the front panel. For more information, refer to the Zebra Link-OS PrintSecure Printer Administration Guide.	
	Accepted values:	000 to 255 for each field
	Related ZPL command(s):	`^ND`
	SGD command used:	`internal_wired.ip.netmask`
	Printer web page:	**View and Modify Printer Settings** > **Network Communications Setup** > **TCP/IP Settings**
	Connection > **Wired** > **Wired Gateway** View and, if necessary, change the default wired gateway. To save changes to this setting, set Connection > Wired > Wired IP Protocol to **PERMANENT**, and then reset the print server (see Connection > Networks > Reset Network). **NOTE:** For printers with Protected Mode enabled, you cannot modify this setting from the front panel. For more information, refer to the Zebra Link-OS PrintSecure Printer Administration Guide.	
	Accepted values:	000 to 255 for each field
	Related ZPL command(s):	`^ND`
	SGD command used:	`internal_wired.ip.gateway`
	Printer web page:	**View and Modify Printer Settings** > **Network Communications Setup** > **TCP/IP Settings**

Menu Display	Menu Option Description	
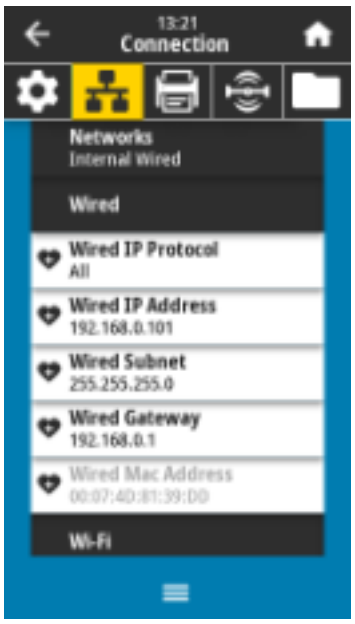	**Connection** > **Wired** > **Wired MAC Address** View the Media Access Control (MAC) address of the wired print server. This value cannot be modified.	
	SGD command used:	`internal_wired.mac_addr`
	Printer web page:	**View and Modify Printer Settings** > **Network Communications Setup** > **TCP/IP Settings**
	Connection > **Wi-Fi** > **Wi-Fi IP Protocol** This parameter indicates if the user (permanent) or the server (dynamic) selects the wireless print server's IP address. When a dynamic option is chosen, this parameter tells the method(s) by which this print server receives the IP address from the server. **NOTE:** You must reset the print server to allow changes to the network settings to take effect. (See Connection > Networks > Reset Network). **NOTE:** For printers with Protected Mode enabled, you cannot modify this setting from the front panel. For more information, refer to the Zebra Link-OS PrintSecure Printer Administration Guide.	
	Accepted values:	ALL, GLEANING ONLY, RARP, BOOTP, DHCP, DHCP & BOOTP, PERMANENT
	Related ZPL command(s):	`^ND`
	SGD command used:	`wlan.ip.protocol`
	Printer web page:	**View and Modify Printer Settings** > **Network Communications Setup** > **Wireless Setup**

Menu Display	Menu Option Description	
	Connection > **Wi-Fi** > **Wi-Fi IP Address** View and, if necessary, change the printer's wireless IP address. To save changes to this setting, set Connection > Wi-Fi > Wi-Fi IP Protocol to **PERMANENT**, and then reset the print server (see Connection > Networks > Reset Network). **NOTE:** For printers with Protected Mode enabled, you cannot modify this setting from the front panel. For more information, refer to the Zebra Link-OS PrintSecure Printer Administration Guide.	
	Accepted values:	000 to 255 for each field
	Related ZPL command(s):	`^ND`
	SGD command used:	`wlan.ip.addr`
	Printer web page:	**View and Modify Printer Settings** > **Network Communications Setup** > **Wireless Setup**
	Connection > **WLAN** > **Wi-Fi Subnet** View and, if necessary, change the wireless subnet mask. To save changes to this setting, set Connection > Wi-Fi > Wi-Fi IP Protocol to **PERMANENT**, and then reset the print server (see Connection > Networks > Reset Network). **NOTE:** For printers with Protected Mode enabled, you cannot modify this setting from the front panel. For more information, refer to the Zebra Link-OS PrintSecure Printer Administration Guide.	
	Accepted values:	000 to 255 for each field
	Related ZPL command(s):	`^ND`
	SGD command used:	`wlan.ip.netmask`
	Printer web page:	**View and Modify Printer Settings** > **Network Communications Setup** > **Wireless Setup**

Menu Display	Menu Option Description	
	Connection > **WLAN** > **Wi-Fi Gateway** View and, if necessary, change the default wireless gateway. To save changes to this setting, set Connection > Wi-Fi > Wi-Fi IP Protocol to **PERMANENT**, and then reset the print server (see Connection > Networks > Reset Network). **NOTE:** For printers with Protected Mode enabled, you cannot modify this setting from the front panel. For more information, refer to the Zebra Link-OS PrintSecure Printer Administration Guide.	
	Accepted values:	000 to 255 for each field
	Related ZPL command(s):	`^ND`
	SGD command used:	`wlan.ip.gateway`
	Printer web page:	**View and Modify Printer Settings** > **Network Communications Setup** > **Wireless Setup**
	Connection > **Wi-Fi** > **Wi-Fi MAC Address** View the Media Access Control (MAC) address of the wireless print server. This value cannot be modified.	
	SGD command used:	`wlan.mac_addr`
	Printer web page:	**View and Modify Printer Settings** > **Network Communications Setup** > **Wireless Setup**

Menu Display	Menu Option Description	
	Connection > **Wi-Fi** > **ESSID** The Extended Service Set Identification (ESSID) is an identifier for your wireless network. Specify the ESSID for the current wireless configuration. **NOTE:** For printers with Protected Mode enabled, you cannot modify this setting from the front panel. For more information, refer to the Zebra Link-OS PrintSecure Printer Administration Guide.	
	Accepted values:	32-character alphanumeric string (default 125)
	SGD command used:	`wlan.essid`
	Printer web page:	**View and Modify Printer Settings** > **Network Communications Setup** > **Wireless Setup**
	Connection > **Wi-Fi** > **Wi-Fi Security** Select the security type being used on your wireless network. **NOTE:** For printers with Protected Mode enabled, you cannot modify this setting from the front panel. For more information, refer to the Zebra Link-OS PrintSecure Printer Administration Guide.	
	Related ZPL command(s):	`^WX`
	SGD command used:	`wlan.security`
	Printer web page:	**View and Modify Printer Settings** > **Network Communications Setup** > **Wireless Encryption Setup**

Menu Display	Menu Option Description	
	Connection > **Wi-Fi** > **Wi-Fi Band** Set a preferred band to connect with via Wi-Fi. **NOTE:** For printers with Protected Mode enabled, you cannot modify this setting from the front panel. For more information, refer to the Zebra Link-OS PrintSecure Printer Administration Guide.	
	Accepted values:	2.4, 5, None
	SGD command used:	`wlan.band_preference`
	Printer web page:	**View and Modify Printer Settings** > **Network Communications** > **Wireless Setup**
	Connection > **Wi-Fi** > **Wi-Fi Country Code** The country code defines the regulatory country for which the wireless radio is currently configured. **IMPORTANT:** The list of country codes is specific to each printer and depends on the printer model and its wireless radio configuration. The list is subject to change, addition, or deletion with any firmware update, at any time, without notice. To determine the country codes available on your printer, issue the `! U1 getvar "wlan"` command to return all commands related to WLAN settings. Locate the `wlan.country.code` command in the results and view the country codes available for your printer. **NOTE:** For printers with Protected Mode enabled, you cannot modify this setting from the front panel. For more information, refer to the Zebra Link-OS PrintSecure Printer Administration Guide.	
	SGD command used:	`wlan.country_code`

Menu Display	Menu Option Description	
	Connection > **Bluetooth** > **Bluetooth** Select if the printer is enabled for Bluetooth device pairing. **NOTE:** For printers with Protected Mode enabled, you cannot modify this setting from the front panel. For more information, refer to the Zebra Link-OS PrintSecure Printer Administration Guide.	
	Accepted values:	ON—Enables the Bluetooth radio. OFF—Disables the Bluetooth radio.
	SGD command used:	`bluetooth.enable`
	Connection > **Bluetooth** > **Bluetooth Discovery** Select if the printer is “Discoverable” for Bluetooth device pairing. **NOTE:** For security, leave this set to OFF when Bluetooth is not in use. **NOTE:** For printers with Protected Mode enabled, you cannot modify this setting from the front panel. For more information, refer to the Zebra Link-OS PrintSecure Printer Administration Guide.	
	Accepted values:	ON—Enables Bluetooth discoverable mode. OFF—Disables Bluetooth discoverable mode.
	SGD command used:	`bluetooth.discoverable`

Menu Display	Menu Option Description	
	Connection > **Bluetooth** > **Friendly Name** This command sets the friendly name, which is used during service discovery. For changes to take effect, you must power cycle the printer or issue the `device.reset` command (see Connection > Networks > Reset Network). If you do not set a friendly name, the setting will default to the printer serial number. **NOTE:** For printers with Protected Mode enabled, you cannot modify this setting from the front panel. For more information, refer to the Zebra Link-OS PrintSecure Printer Administration Guide.	
	Accepted values:	17-character text string
	SGD command used:	`bluetooth.friendly_name`
	Connection > **Bluetooth** > **Minimum Security Mode** This printer setting parameter sets the Bluetooth Minimum Security mode. Minimum Security Mode provides for different levels of security, depending on the printer radio version and printer firmware. See the Zebra Programming Guide at zebra.com/manuals for more information. **NOTE:** For printers with Protected Mode enabled, you cannot modify this setting from the front panel. For more information, refer to the Zebra Link-OS PrintSecure Printer Administration Guide.	
	Accepted values:	1, 2, 3, 4
	SGD command used:	`bluetooth.minimum_security_mode`

Menu Display	Menu Option Description	
	Connection > **Bluetooth** > **Specification Version** This parameter displays the Bluetooth library version number.	
	SGD command used:	`bluetooth.version`
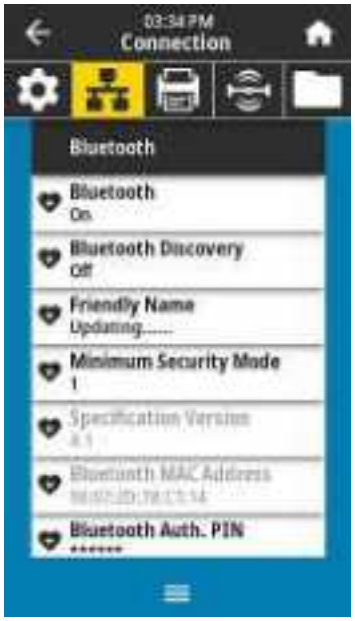	**Connection** > **Bluetooth** > **MAC Address** This parameter displays the Bluetooth device address.	
	SGD command used:	`bluetooth.address`

Menu Display	Menu Option Description	
	Connection > **Bluetooth** > **Bluetooth Auth. PIN** Set the PIN used when Bluetooth authentication is enabled. **NOTE:** For printers with Protected Mode enabled, you cannot modify this setting from the front panel. For more information, refer to the Zebra Link-OS PrintSecure Printer Administration Guide.	
	SGD command used:	`bluetooth.bluetooth_pin` (to set the PIN) `bluetooth.authentication` (to enable authentication)
	Connection > **Bluetooth** > **Bluetooth Bonding** Controls whether the Bluetooth stack will “bond” or save link keys for devices that successfully connect to the printer. **NOTE:** For printers with Protected Mode enabled, you cannot modify this setting from the front panel. For more information, refer to the Zebra Link-OS PrintSecure Printer Administration Guide.	
	Accepted values:	ON—Enables Bluetooth bonding. OFF—Disables Bluetooth bonding.
	SGD command used:	`bluetooth.bonding`

Print Menu

Menu Display	Menu Option Description	
	Print > **Print Quality** > **Darkness** Set the print darkness to the lowest setting that provides good print quality. If you set the darkness too high, the label image may print unclearly, barcodes may not scan correctly, the ribbon may burn through, or the printhead may wear prematurely.	
	Accepted values:	0.0 to 30.0
	Related ZPL command(s):	`^MD` `~SD`
	SGD command used:	`print.tone`
	Printer web page:	**View and Modify Printer Settings** > **General Setup** > **Darkness**
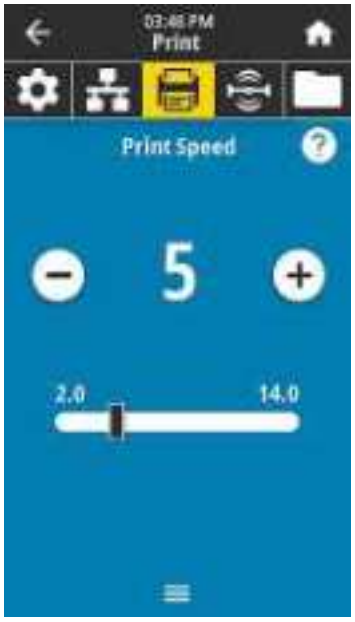	**Print** > **Print Quality** > **Print Speed** Select the speed, in inches per second (ips), for printing a label. Slower print speeds typically yield better print quality.	
	Accepted values:	2 to 14 ips
	Related ZPL command(s):	`^PR`
	SGD command used:	`media.speed`
	Printer web page:	**View and Modify Printer Settings** > **General Setup** > **Print Speed**

Menu Display	Menu Option Description	
	Print > **Print Quality** > **Print Type** Specify if the printer needs to use ribbon for printing.	
	Accepted values:	• Thermal Transfer—Uses ribbon and thermal transfer media. • Direct Thermal—Uses direct thermal media and no ribbon.
	Related ZPL command(s):	`^MT`
	SGD command used:	`ezpl.print_method`
	Printer web page:	**View and Modify Printer Settings** > **Media Setup** > **Print Method**
	Print > **Print Quality** > **Label Type** Select the type of media that you are using.	
	Accepted values:	Continuous, Gap/Notch, Mark If you select **Continuous**, you must include a label length in your label format (`^LL` if you are using ZPL). If you select **Gap/Notch** or **Mark** for various noncontinuous media, the printer feeds media to calculate the label length.
	Related ZPL command(s):	`^MN`
	SGD command used:	`ezpl.media_type`
	Printer web page:	**View and Modify Printer Settings** > **Media Setup** > **Media Type**

Menu Display	Menu Option Description	
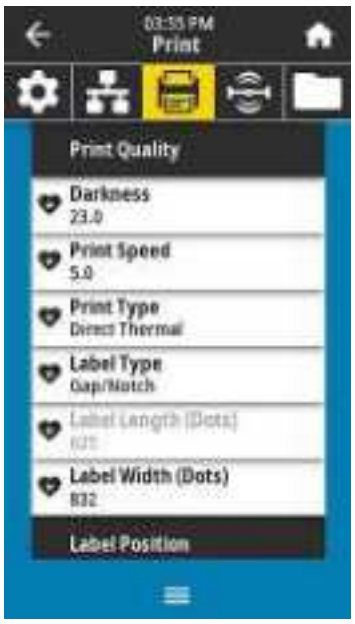	**Print** > **Print Quality** > **Label Length** View the calibrated label length in dots. This value may be modified only under one of these conditions: • the printer is set for continuous media • the second parameter of `^LL` is set to `Y`	
	Related ZPL command(s):	`^LL`
	Print > **Print Quality** > **Label Width (Dots)** Specify the width of the labels being used, in dots. The default value is the maximum width for the printer, based on the printhead's DPI value.	
	Accepted values:	**NOTE:** Setting the width too narrow can result in portions of a label format not being printed on the media. Setting the width too wide wastes formatting memory and can cause the printer to print beyond the label and onto the platen roller. This setting can affect the horizontal position of the label format if the image was inverted using the `^POI` ZPL II command. 203 dpi = 0002 to 832 300 dpi = 0002 to 1248
	Related ZPL command(s):	`^PW`
	SGD command used:	`ezpl.print_width`
	Printer web page:	**View and Modify Printer Settings** > **Media Setup** > **Print Width**

Menu Display	Menu Option Description	
	Print > **Image Adjust** > **Media Handling** Select a media handling method that is compatible with the options available on your printer.	
	Accepted values:	Tear Off, Peel Off, Rewind, Cutter, Delayed Cut, Linerless Peel, Linerless Rewind, Linerless Tear, Applicator, Linerless Cut, Linerless Delayed Cut
	Related ZPL command(s):	`^MM`
	SGD command used:	`media.printmode`
	Printer web page:	**View and Modify Printer Settings** > **General Setup** > **Print Mode**
	Print > **Image Adjust** > **Tear Line Offset** If necessary, shift the position of the media over the tear-off bar after printing. • Lower numbers move the media into the printer by the specified number of dots (the tear line moves closer to the edge of the label just printed). • Higher numbers move the media out of the printer (the tear line moves closer to the leading edge of the next label). 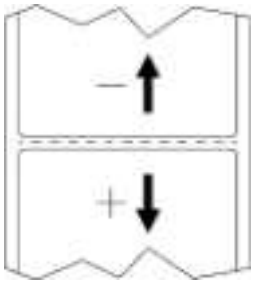	
	Accepted values:	–120 to +120
	Related ZPL command(s):	`~TA`
	SGD command used:	`ezpl.tear_off`
	Printer web page:	**View and Modify Printer Settings** > **General Setup** > **Tear Off**

Menu Display	Menu Option Description	
	Print > **Image Adjust** > **Horizontal Label Offset** If necessary, shift the position of the image horizontally on the label. • Negative numbers move the left edge of the image toward the left edge of the label by the number of dots selected. • Positive numbers move the edge of the image toward the right edge of the label. 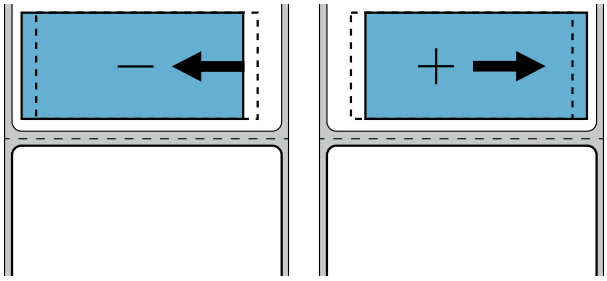	
	Accepted values:	–9999 to 9999
	Related ZPL command(s):	`^LS`
	SGD command used:	`zpl.left_position`
	Printer web page:	**View and Modify Printer Settings** > **Advanced Setup** > **Left Position**
	Print > **Image Adjust** > **Vertical Label Offset** If necessary, shift the position of the image vertically on the label. • Lower numbers move the image higher on the label (toward the printhead). • Higher numbers move the image farther down on the label (away from the printhead) by the specified number of dots. 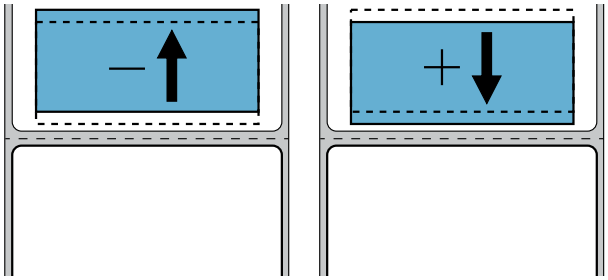	
	Accepted values:	–120 to +120
	Related ZPL command(s):	`^LT`

Menu Display	Menu Option Description	
	SGD command used:	`zpl.label_top`
	Printer web page:	**View and Modify Printer Settings** > **General Setup** > **Label Top**
	Print > **Image Adjust** > **Invert Label** When this is on, the label orientation is inverted.	
	Accepted values:	On, Off
	Related ZPL command(s):	`^PO`
	Print > **Image Adjust** > **Backfeed** Specify the backfeed order in relation to printing	
	Accepted values:	N = normal — 90 percent backfeed after label is printed A = 100 percent backfeed after printing and cutting O = off — turn backfeed off completely B = 0 percent backfeed after printing and cutting, and 100 percent before printing the next label 10 to 90 = percentage value
	Related ZPL command(s):	`~JS`

Menu Display	Menu Option Description	
	Print > **Sensors** > **Manual Calibration** Calibrate the printer to adjust the sensitivity of the media and ribbon sensors. For complete instructions on how to perform a calibration procedure, see Calibrating the Ribbon and Media Sensors on page 116.	
	Related ZPL command(s):	`~JC`
	SGD command used:	`ezpl.manual_calibration`
	Control panel key(s):	Hold **PAUSE** + **FEED** + **CANCEL** for 2 seconds to initiate calibration.
	Printer web page:	The calibration procedure cannot be initiated through the web pages. See the following web page for settings that are set during sensor calibration: **View and Modify Printer Settings** > **Calibration** **IMPORTANT:** Do not change these settings unless you are told to do so by Zebra Technical Support or by an authorized service technician.
	Print > **Sensors** > **Label Sensor** Set the sensitivity of the label sensor. **IMPORTANT:** This value is set during sensor calibration. Do not change these settings unless you are told to do so by Zebra Technical Support or by an authorized service technician.	
	Accepted values:	0 to 255
	SGD command used:	`ezpl.label_sensor`
	Printer web page:	**View and Modify Printer Settings** > **Calibration**

Menu Display	Menu Option Description	
	Print > **Sensors** > **Sensor Type** Select the media sensor that is appropriate for the media that you are using. The reflective sensor typically is used for black mark media. The transmissive sensor is typically used for other media types.	
	Accepted values:	TRANSMISSIVE, REFLECTIVE
	Related ZPL command(s):	`^JS`
	SGD command used:	`device.sensor_select`
	Printer web page:	**View and Modify Printer Settings** > **Media Setup**
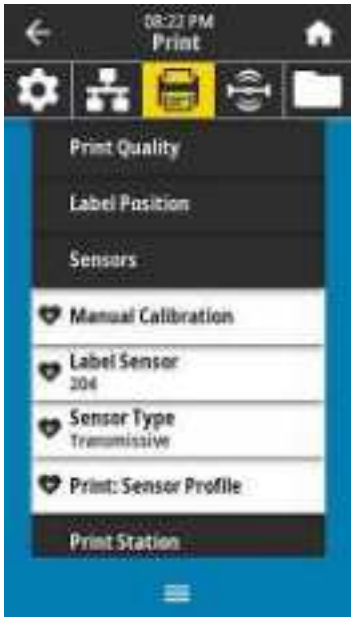	**Print** > **Sensors** > **Print: Sensor Profile** Shows the sensor settings compared to actual sensor readings. To interpret the results, see Sensor Profile on page 144.	
	Related ZPL command(s):	`~JG`
	Control panel key(s):	Hold **FEED** + **CANCEL** during printer power-up.
	Printer web page:	**View and Modify Printer Settings** > **Print Listings on Label** >

Menu Display	Menu Option Description	
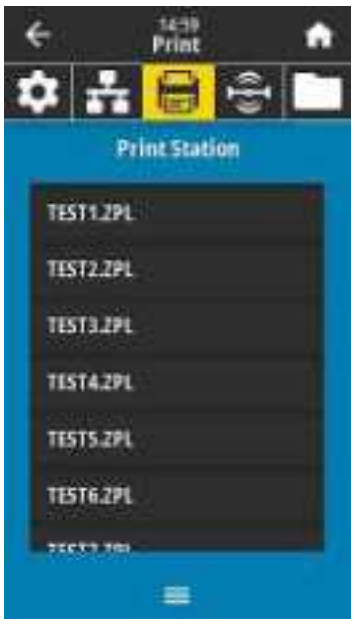	**Print** > **Print Station** Use this menu item to fill in variable fields in a label format and print the label using a Human Input Device (HID), such as a USB keyboard, scale, or barcode scanner. A suitable label format must be stored on the E: drive of the printer to use this option. See the exercises in Using a USB Host Port and the Print Touch Feature on page 172 for an exercise using this capability. When you plug an HID into one of the printer's USB host ports, use this user menu to select a form on the printer's E: drive. After you have been prompted to fill in each variable `^FN` field on the form, you can specify the desired quantity of labels to print. For more information about using the `^FN` command or the SGD commands related to this feature, see the Zebra Programming Guide at zebra.com/manuals for more information. **NOTE:** This menu item can be used only if a USB device is connected to a USB host port on the printer.	

	SGD command used:	`usb.host.keyboard_input`
		(must be set to ON)
		`usb.host.template_list`
		`usb.host.fn_field_list`
		`usb.host.fn_field_data`
		`usb.host.fn_last_field`
		`usb.host.template_print_amount`

	Print > **Applicator** > **Applicator Port Mode** Controls the way in which the applicator port's "End Print" signal functions.	
	Accepted values:	Off 1 = End Print signal normally high, and low only when the printer is moving the label forward. 2 = End Print signal normally low, and high only when the printer is moving the label forward. 3 = End Print signal normally high, and low for 20 ms when a label has been printed and positioned. 4 = End Print signal normally low, and high for 20 ms when a label has been printed and positioned.
	Related ZPL command(s):	`^JJ`
	SGD command used:	`device.applicator.end_print`

Menu Display	Menu Option Description	
	Print > **Applicator** > **Start Print Mode** Determines if the applicator port's "Start Print" signal is in level mode or pulse mode.	
	Accepted values:	Pulse—Start Print signal must be deasserted before it can be asserted for the next label. Level—Start Print signal does not need to be deasserted to print the next label. As long as the Start Print signal is low and a label is formatted, a label prints.
	Related ZPL command(s):	`^JJ`
	SGD command used:	`device.applicator.start_print`
	Print > **Applicator** > **Error on Pause** Determines how applicator port errors are treated by the printer. Enabling this feature also causes the "Service Required" pin to be asserted.	
	Accepted values:	ENABLED, DISABLED
	SGD command used:	`device.applicator.error_on_pause`
	Printer web page:	**View and Modify Printer Settings** > **Advanced Setup** > **Error on Pause**

Menu Display	Menu Option Description	
	Print > **Applicator** > **Applicator Reprint** Specifies if a high or low value is required for an applicator to reprint a label. Enables or disables the `~PR` command, which when enabled reprints the last printed label. It also enables the Reprint button on the Home screen.	
	Related ZPL command(s):	`^JJ` and `~PR`
	SGD command used:	`device.applicator.reprint`

RFID Menu

Menu Display	Menu Option Description	
	RFID > **RFID Status** Display the status of the RFID subsystem of the printer.	

	Related ZPL command(s):	`^HL`
		or
		`~HL`

	SGD command used:	`rfid.error.response`

Menu Display	Menu Option Description	
	RFID > **RFID Test** During the RFID test, the printer attempts to read and write to a transponder. No printer movement occurs with this test. To test an RFID label: **1.** Position the RFID label with its transponder over the RFID antenna array. **2.** Touch **Start** . The results of the test appear on the display. 	
	SGD command used:	`rfid.tag.test.content` and `rfid.tag.test.execute`

Menu Display	Menu Option Description	
	RFID > **RFID Calibrate** Initiate tag calibration for RFID media. (This is not the same as media and ribbon calibration.) During the process, the printer moves the media, calibrates the RFID tag position, and determines the optimal settings for the RFID media being used. These settings include the programming position, the antenna element to use, and the read/write power level to use. (See RFID Programming Guide 3 for more information.) **NOTE:** Before running this command, load the printer with RFID media, calibrate your printer, close the printhead, and feed at least one label to make sure that tag calibration will begin from the correct position. Leave all transponders before and after the tag that is being calibrated. This allows the printer to determine RFID settings which do not encode the adjacent tag. Allow a portion of media to extend out the front of the printer to allow for backfeed during the tag calibration procedure.	
	Related ZPL command(s):	`^HR`
	SGD command used:	`rfid.tag.calibrate`
	RFID > **Read Power** If the desired read power is not achieved through RFID tag calibration, a value may be specified.	
	Accepted values:	0 to 30
	Related ZPL command(s):	`^RW`
	SGD command used:	`rfid.reader_1.power.read`
	Printer web page:	**View and Modify Printer Settings** > **RFID Setup** > **RFID READ PWR**

Menu Display	Menu Option Description	
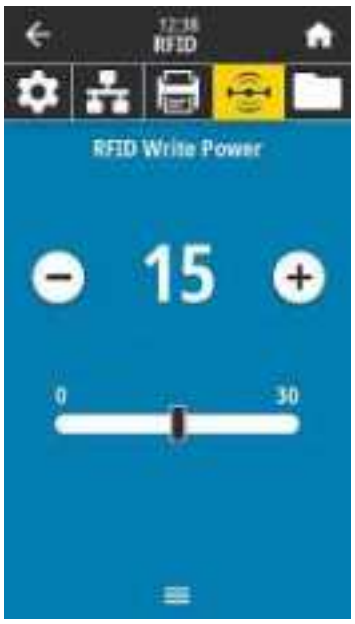	**RFID** > **RFID Write Power** If the desired write power is not achieved through RFID tag calibration, a value may be specified.	
	Accepted values:	0 to 30
	Related ZPL command(s):	`^RW`
	SGD command used:	`rfid.reader_1.power.write`
	Printer web page:	**View and Modify Printer Settings** > **RFID Setup** > **RFID WRITE PWR**
	RFID > **RFID Antenna** If the desired antenna is not achieved through RFID tag calibration, a value may be specified.	
	Accepted values:	A1, A2, A3, A4 B1, B2, B3, B4
	Related ZPL command(s):	`^RW`
	SGD command used:	`rfid.reader_1.antenna_port`
	Printer web page:	**View and Modify Printer Settings** > **RFID Setup** > **RFID ANTENNA**

Menu Display	Menu Option Description	
	RFID > **RFID Valid Count** Resets the RFID valid label counter to zero.	
	Related ZPL command(s):	`~RO`
	SGD command used:	`odometer.rfid.valid_resettable`
	RFID > **RFID Void Count** Resets the RFID void label counter to zero.	
	Related ZPL command(s):	`~RO`
	SGD command used:	`odometer.rfid.void_resettable`

Menu Display	Menu Option Description	
	RFID > **RFID Program Position** If the desired programming position (read/write position) is not achieved through RFID tag calibration, a value may be specified.	
	Accepted values:	F0 to Fxxx (where xxx is the label length in millimeters or 999, whichever is less)—The printer feeds the label forward for the specified distance and then begins programming. B0 to B30—The printer backfeeds the label for the specified distance and then begins programming. To account for the backfeed, allow empty media liner to extend out of the front of the printer when using a backward programming position.
	Related ZPL command(s):	`^RS`
	SGD command used:	`rfid.position.program`
	Printer web page:	**View and Modify Printer Settings** > **RFID Setup** > **PROGRAM POSITION**

Menu Display	Menu Option Description
	RFID > **Read RFID Data** Read and return the specified tag data from the RFID tag located over the RFID antenna. No printer movement occurs while tag data is being read. The printhead can be open or closed. To read and display the information stored on an RFID tag: **1.** Position the RFID label with its transponder over the RFID antenna. **2.** Touch **Read RFID Data**. The results of the test are shown on the display.
	Related ZPL command(s): `^RF`
	SGD command used: `rfid.tag.read.content` `rfid.tag.read.execute`

Storage Menu

Menu Display	Menu Option Description	
	Storage > **USB** > **Copy: Files to USB** Select files from the printer to store on a USB Flash drive. To copy files from the printer to a USB Flash drive: **1.** Insert a USB flash drive into the printer's USB host port. The printer lists available files. **2.** Touch the box next to the desired files. **Select All** is also available. **3.** Touch the checkmark to copy the selected files.	
	SGD command used:	`usb.host.write_list`
	Storage > **USB** > **Copy: Files to Printer** Select files to copy to the printer from a USB Flash drive. To copy files to the printer from a USB Flash drive: **1.** Insert a USB flash drive into the printer's USB host port. The printer lists available files. **2.** Touch the box next to the desired files. **Select All** is also available. **3.** Touch the check mark to copy the selected files.	
	SGD command used:	`usb.host.read_list`

Menu Display	Menu Option Description	
	Storage > **USB** > **Copy: Configuration to USB** Use this function to copy the printer's configuration information to a USB mass storage device, such as a USB Flash drive, that is plugged into one of the printer's USB host ports. This makes the information accessible without having to print physical labels.	
	Related ZPL command(s):	`^HH`—Returns the printer configuration information returned to the host computer.
	Printer web page:	**Printer Home Page** > **View Printer Configuration** (to view printer configuration information on your web browser) **View and Modify Printer Settings** > **Print Listings on Label** (to print the configuration information on labels)
	Storage > **USB** > **Print: From USB** Select files to print from a USB Flash drive. To print files from a USB Flash drive: **1.** Insert a USB flash drive into the printer's USB host port. The printer lists available files. **2.** Touch the box next to the desired files. **Select All** is also available. **3.** Touch the check mark to print the selected files.	
	SGD command used:	`usb.host.read_list`

Menu Display	Menu Option Description	
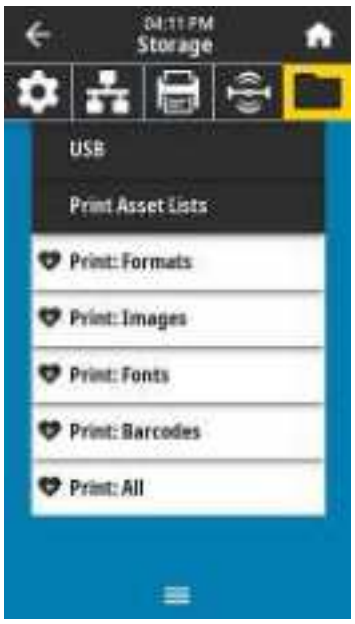	**Storage** > **Print Asset Lists** Print the specified information on one or more labels.	
	Accepted values:	Formats—Prints the available formats stored in the printer's RAM or Flash memory. Images—Prints the available images stored in the printer's RAM or Flash memory. Fonts—Prints the available fonts in the printer, including standard printer fonts plus any optional fonts. Fonts may be stored in RAM or Flash memory. Barcodes—Prints the available barcodes in the printer. Barcodes may be stored in RAM or Flash memory. All—Prints the previous labels plus the printer configuration label and the network configuration label.
	Related ZPL command(s):	`^WD`
	Printer web page:	**View and Modify Printer Settings** > **Print Listings on Label**
	Storage > **Print from E:** Print one or more files stored on the printer.	

Calibrating the Ribbon and Media Sensors

Printer calibration adjusts the sensitivity of the media and ribbon sensors. It also helps ensure proper alignment of the image being printed and optimal print quality.

Perform calibration in the following situations:

- You switched to a different size or type of ribbon or media.
- The printer experiences any of the following issues:
  - Skips labels.
  - The printed image wanders or drifts side to side or up and down.
  - Ribbon is not being detected either when it is installed or when it runs out.
  - Non-continuous labels are being treated as continuous labels.

Performing Auto Calibration

You can set the printer to perform an auto calibration (`CALIBRATE`) or a short calibration (`SHORT CAL`) using the `POWER UP ACTION` or `HEAD CLOSE ACTION` parameters.

- `CALIBRATE`—Adjusts sensor levels and thresholds, determines the label length, and feeds the media to the next web.
- `SHORT CAL`—Sets the media and web thresholds without adjusting sensor gain, determines the label length, and feeds the media to the next web.

See Power-Up Action or Head-Close Action for details.

Performing Manual Sensor Calibration

You may need to manually calibrate the printer if you see issues with the print output.

1. Touch **Print** > **Sensors** > **Manual Calibration**.

2. Touch **Start Calibration**.
3. Follow the steps in the calibration procedure as prompted.

IMPORTANT: Follow the calibration procedure exactly as presented.

- Touch **Next** to advance to the next prompt.
- You may press and hold **CANCEL** on the control panel at any step in the procedure to cancel the calibration process.

Table 3 ZT231 Media Calibration Sequence

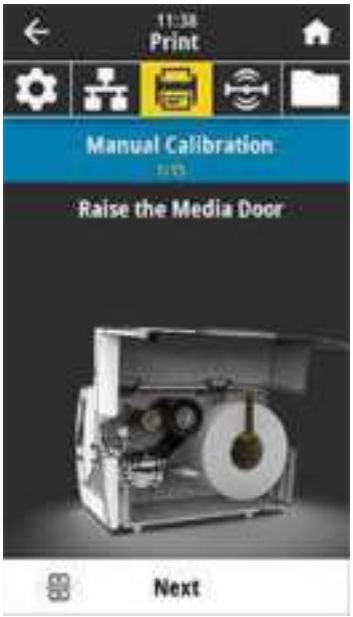	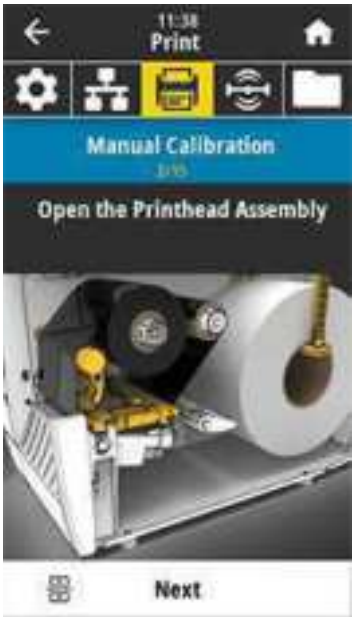	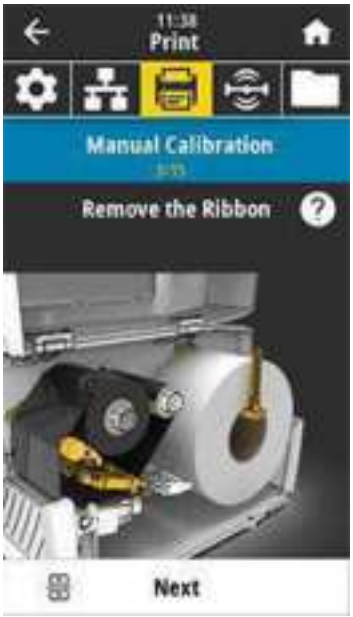
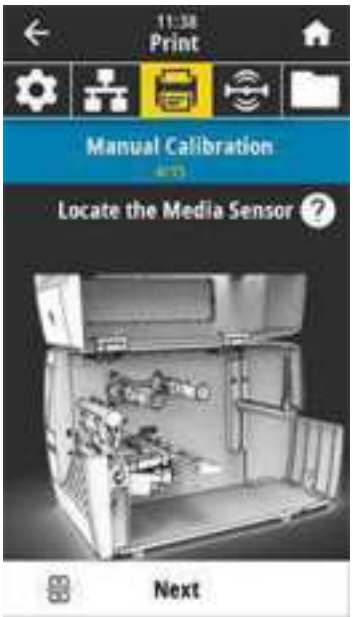	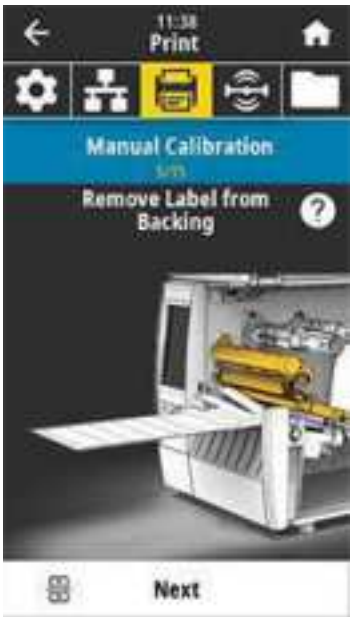	

Table 3 ZT231 Media Calibration Sequence (Continued)

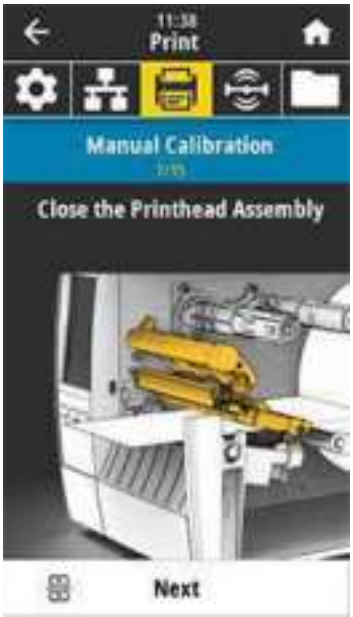	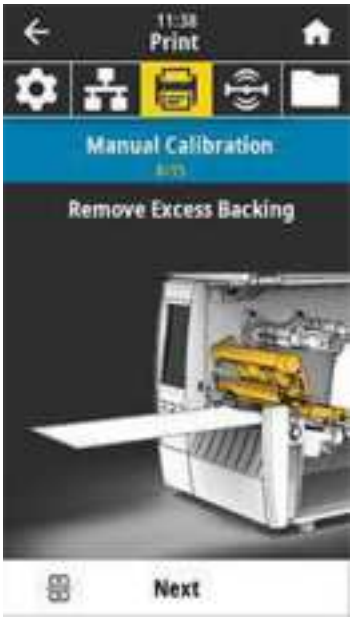	
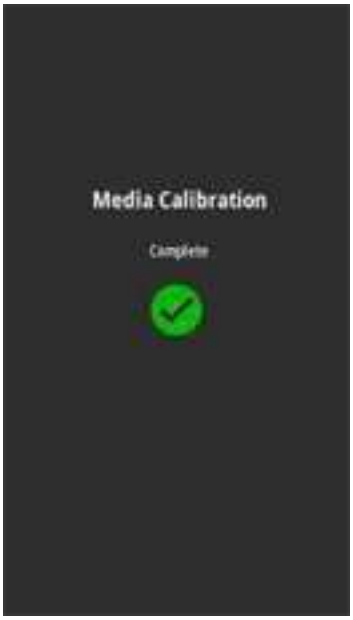	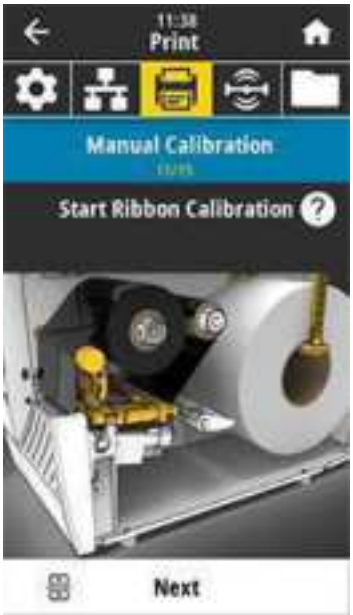	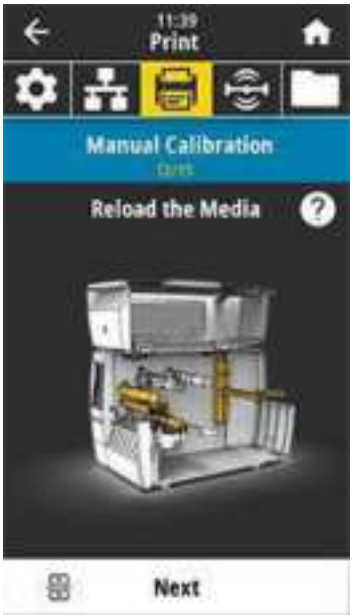

Table 3 ZT231 Media Calibration Sequence (Continued)

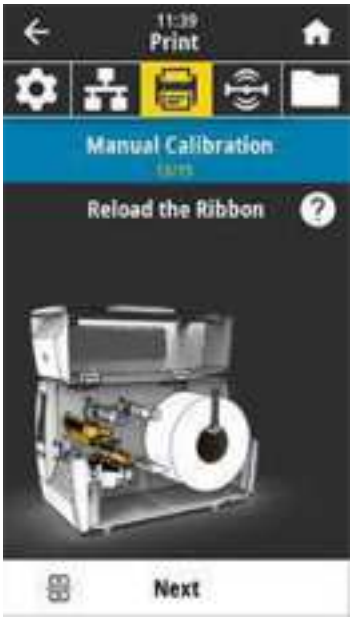	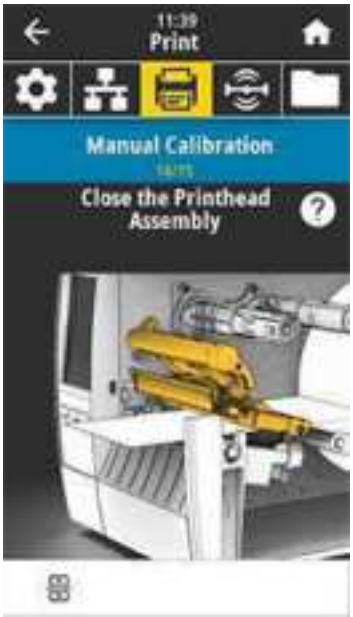	

4. When calibration is complete, press **PAUSE** to exit pause mode and enable printing.

Adjusting the Printhead Pressure

You may need to adjust printhead pressure if printing is too light on one side, if you use thick media, or if the media drifts from side to side during printing. Use the lowest printhead pressure necessary to produce good print quality.

The printhead pressure adjustment dials have setting marks from 1 to 4 in half-mark increments.

Figure 7 Printhead Pressure Adjustment Dials

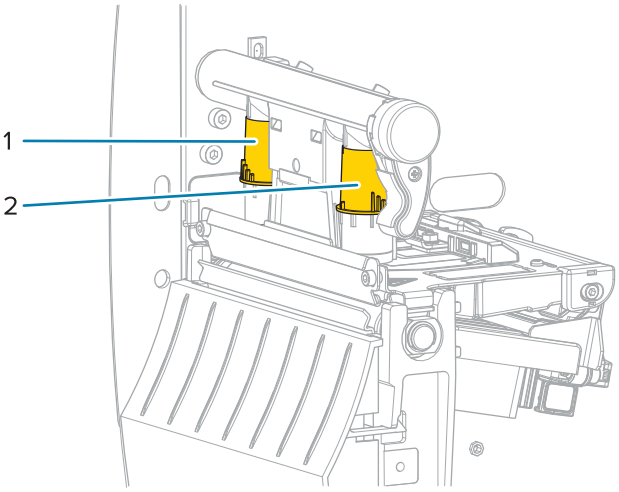

1	Inside dial
2	Outside dial

Begin with the following pressure settings based on your media width, and then make adjustments if necessary.

Table 4 Starting Points for Printhead Pressure

Media Width	Inside Dial Setting	Outside Dial Setting
≥ 89 mm (≥ 3.5 in.)	2	2
76 mm (3 in.)	2.5	1.5
51 mm (2 in.)	3	1
25 mm (1 in.	4	1

If necessary, adjust the printhead pressure adjustment dials as follows:

If the Media...	Then...
Requires higher pressure to print well	Increase both dials one position. 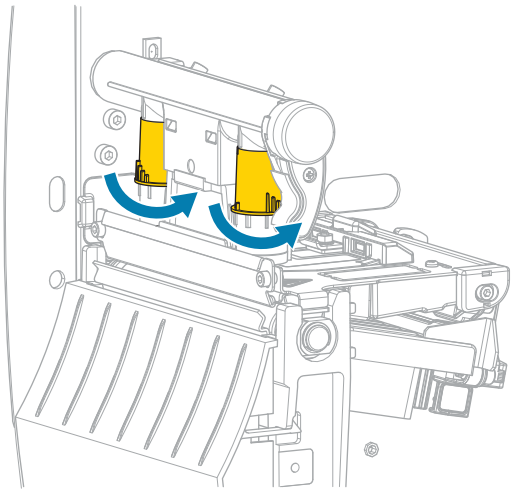
Shifts left while printing	Increase the outside dial setting one position. 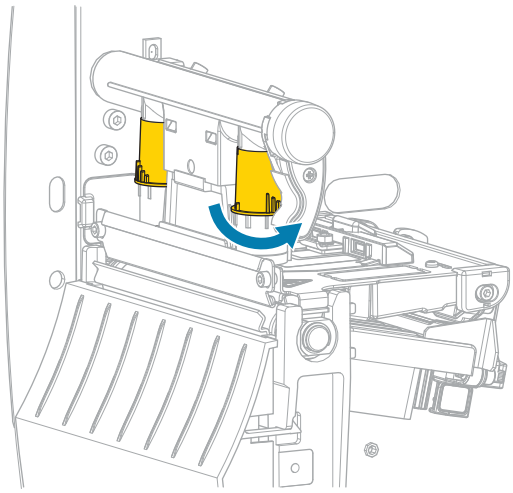 OR Decrease the inside dial setting one position. 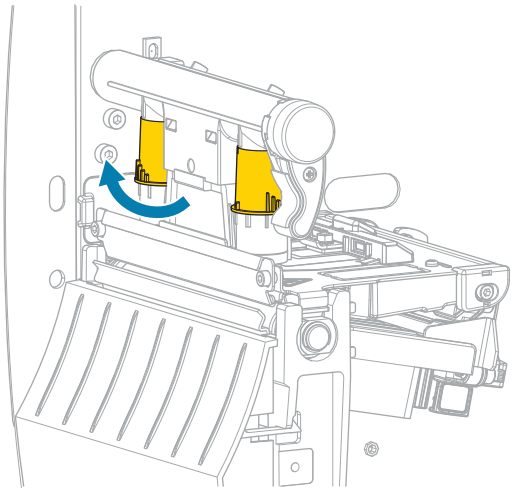

If the Media...	Then...
Shifts right while printing	Increase the inside dial setting one position. 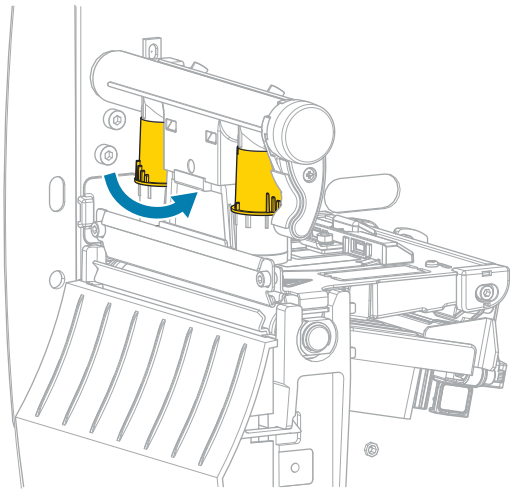 OR Decrease the outside dial setting one position. 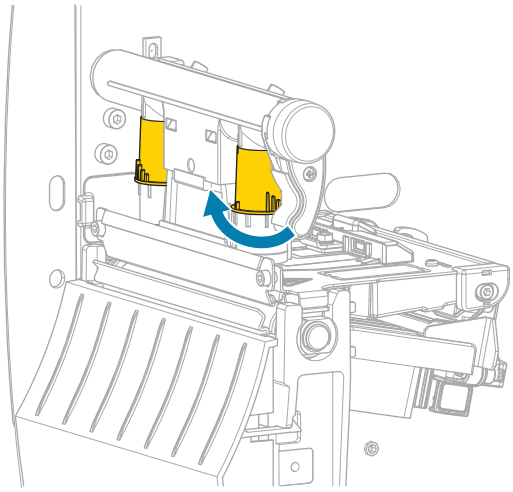
Prints too lightly on the left side of the label.	Increase the inside dial setting one position. 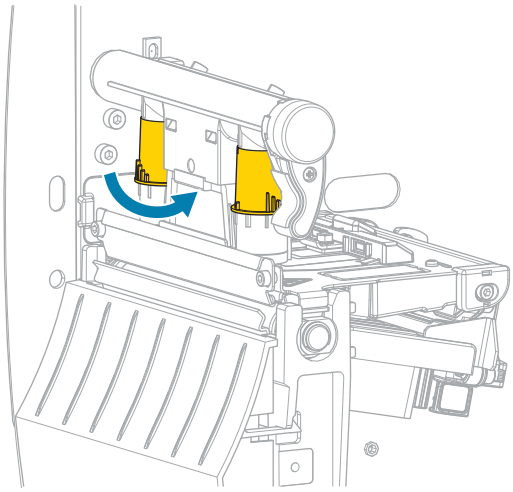

If the Media...	Then...
Prints too lightly on the right side of the label.	Increase the outside dial setting one position. 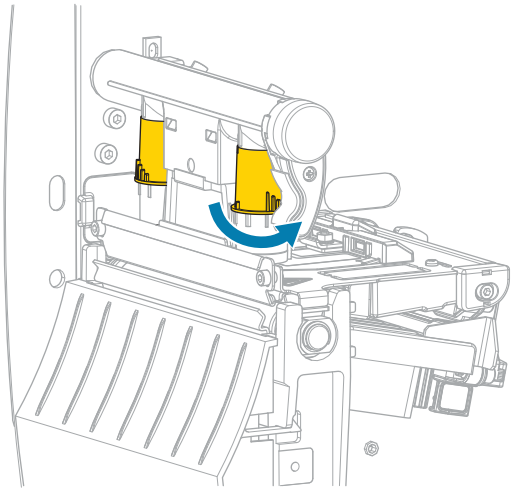

Adjusting Ribbon Tension

For the printer to operate correctly, the ribbon supply spindle and ribbon take-up spindle must use the same tension setting (normal or low tension). Use the normal tension setting seen here for most applications. If you are using narrow ribbon or experience certain ribbon issues, you may need to lower the ribbon tension.

Normal Tension Setting

To place the ribbon spindles in the normal position, firmly pull out each spindle end cap until it extends and clicks in place. Use this setting for most applications.

Figure 8 Normal Tension Setting (Spindle End Caps Pulled Out)

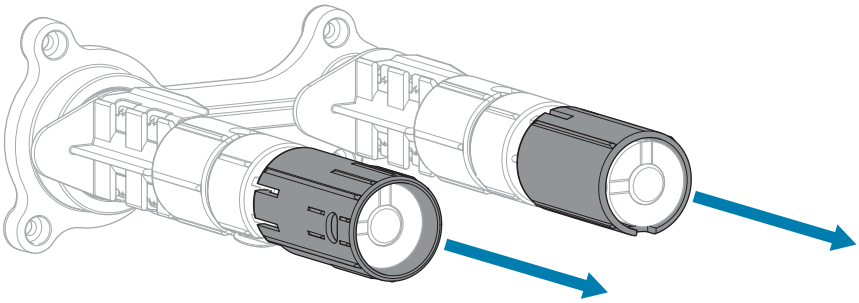

Low Tension Setting

To place a spindle in the low-tension position, firmly push in the end cap until it retracts and clicks in place. Use this setting only when necessary, such as if the ribbon causes scuff marks at the beginning of a roll or if normal tension causes the ribbon to stall at the end of the roll.

Figure 9 Ribbon Spindles— Low Tension Setting (Spindle End Caps Pushed In)

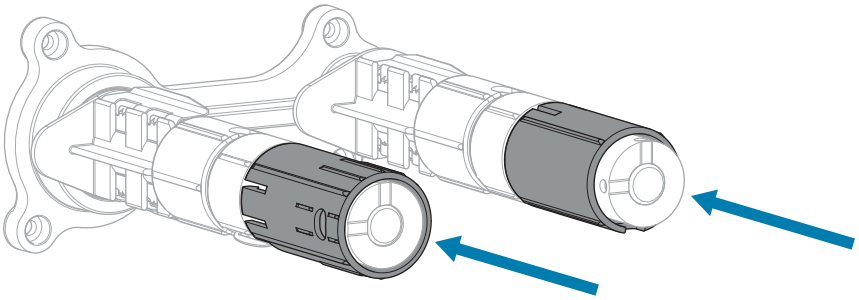

Routine Maintenance

This section provides routine cleaning and maintenance procedures.

Cleaning Schedule and Procedures

Routine preventive maintenance is a crucial part of normal printer operation. By taking good care of your printer, you can minimize the potential problems that you might have with it and help to achieve and to maintain your standards for print quality.

Over time, the movement of media or ribbon across the printhead wears through the protective ceramic coating, exposing and eventually damaging the print elements (dots). To avoid abrasion:

- Clean the printhead frequently.
- Minimize printhead pressure and burn temperature (darkness) settings by optimizing the balance between the two.
- When using Thermal Transfer mode, ensure that the ribbon is as wide or wider than the media to prevent exposing the printhead elements to the more abrasive label material.

IMPORTANT: Zebra is not responsible for damage caused by the use of cleaning fluids on this printer.

Specific cleaning procedures are provided on the following pages. This table shows the recommended cleaning schedule. These intervals are intended as guidelines only. You may have to clean more often, depending upon your application and media.

Table 5 Recommended Cleaning Schedule

Area	Method	Interval
Printhead	Solvent*	Direct Thermal Mode: After every roll of media (or 500 feet of fanfold media). Thermal Transfer Mode: After every roll of ribbon.
Platen roller	Solvent*	
Media sensors	Air blow	
Ribbon sensor	Air blow	
Media path	Solvent*	
Ribbon path	Solvent*	
Pinch roller (part of Peel-Off option)	Solvent*	

Table 5 Recommended Cleaning Schedule (Continued)

Area		Method	Interval
Cutter module	If cutting continuous, pressure-sensitive media	Solvent*	After every roll of media (or more often, depending upon your application and media).
	If cutting tag stock or label liner material	Solvent* and air blow	After every two or three rolls of media.
Tear-off/peel-off bar		Solvent*	Once a month.
Take-label sensor		Air blow	Once every six months.

* Zebra recommends using Preventive Maintenance Kit (part number 47362). In place of the Preventive Maintenance Kit, you may use a lint-free cloth dipped in 99.7% isopropyl alcohol.

Cleaning the Exterior, the Media Compartment, and the Sensors

Over time, dust, grime, and other debris may build up on the outside and inside of your printer, particularly in a harsh operating environment.

Printer Exterior

You may clean the exterior surfaces of the printer with a lint-free cloth and a small amount of a mild detergent, if necessary. Do not use harsh or abrasive cleaning agents or solvents.

IMPORTANT:

Zebra is not responsible for damage caused by the use of cleaning fluids on this printer.

Media Compartment and Sensors

To clean the sensors:

1. Brush, air blow, or vacuum any accumulated paper lint and dust away from the media and ribbon paths.
2. Brush, air blow, or vacuum any accumulated paper lint and dust away from the sensors.

Cleaning the Printhead and Platen Roller

Inconsistent print quality, such as voids in the barcode or graphics, may indicate a dirty printhead. For the recommended cleaning schedule, see Table 5 Recommended Cleaning Schedule on page 125.

CAUTION—PRODUCT DAMAGE: For printers with a peel assembly, keep the peel assembly closed while cleaning the platen roller to reduce the risk of bending the tear-off/peel-off bar.

CAUTION—ESD: Before touching the printhead assembly, discharge any built-up static electricity by touching the metal printer frame or by using an anti-static wriststrap and mat.

1. Open the media cover.

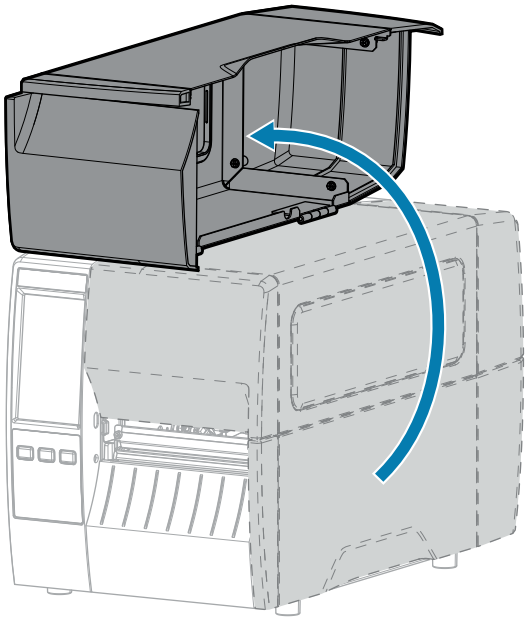

2. Remove the ribbon (if used) and the media.
3. Using the swab from a Zebra Preventive Maintenance Kit, wipe along the brown strip on the printhead assembly from end to end. In place of the Preventive Maintenance Kit, you may use a clean swab dipped in 99.7% isopropyl alcohol. Allow the solvent to evaporate.

CAUTION—HOT SURFACE: The printhead may be hot and could cause severe burns. Allow the printhead to cool.

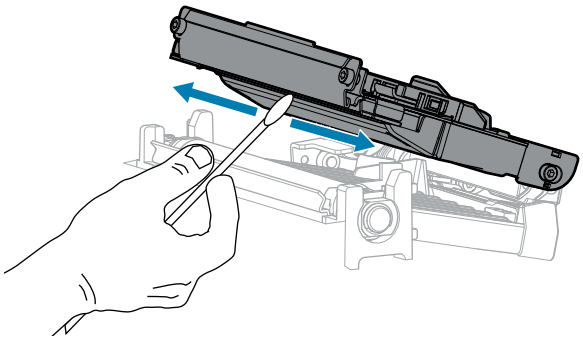

4. While manually rotating the platen roller, clean it thoroughly with the swab. Allow the solvent to evaporate.

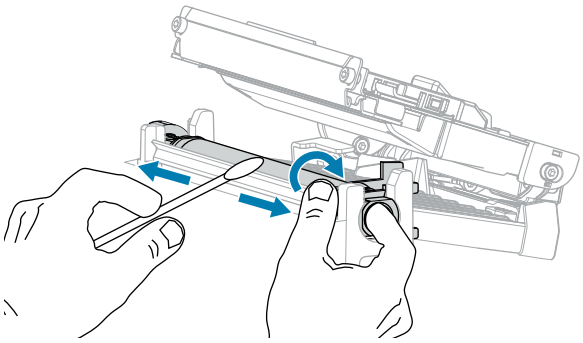

5. Reload the ribbon (if used) and the media. For instructions, see Loading the Ribbon on page 58 or Loading the Media on page 39.
6. Close the media cover.

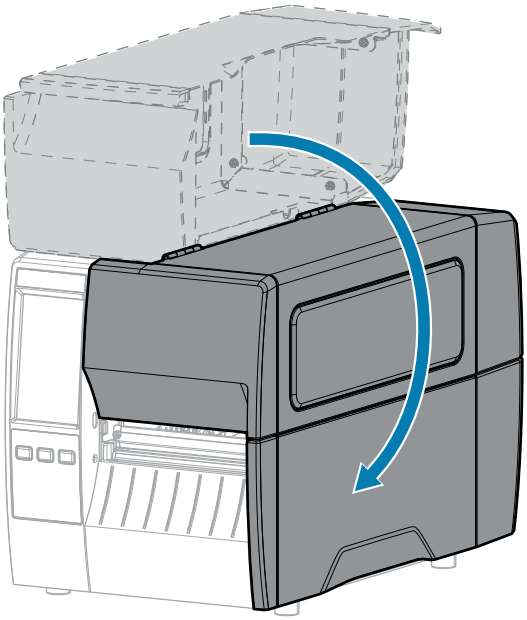

7. Press **PAUSE** to exit pause mode and enable printing.

   The printer may perform a label calibration or feed a label, depending on your settings.

NOTE: If performing this procedure does not improve print quality, try cleaning the printhead with Save-A-Printhead cleaning film. This specially coated material removes contamination buildup without damaging the printhead. Call your authorized Zebra reseller for more information.

Cleaning the Peel Assembly

The peel assembly, which is part of the Peel-Off and Liner Take-Up options, consists of several spring-loaded rollers to ensure the proper roller pressure. Clean the pinch roller and tear-off/peel-off bar if adhesive buildup begins to affect peel performance.

CAUTION: Do not use your left hand to assist in closing the Peel assembly. The top edge of the Peel roller/assembly could pinch your fingers.

If adhesive buildup affects peel-off performance, complete these steps.

1. Open the media cover.

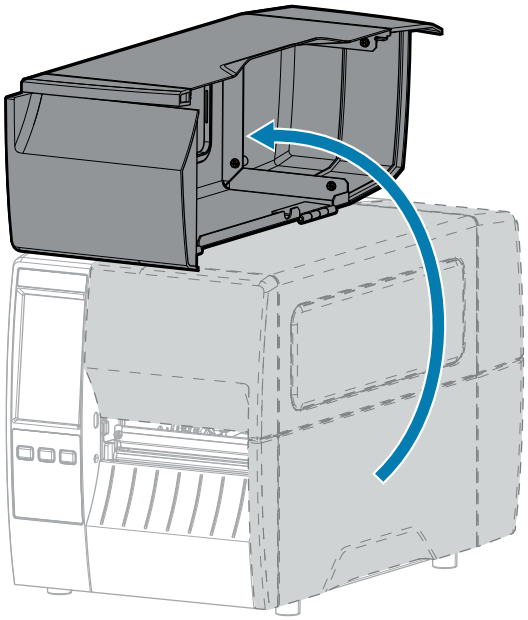

CAUTION: The printhead may be hot and could cause severe burns. Allow the printhead to cool.

2. Push down the peel-off mechanism release lever to open the peel assembly.

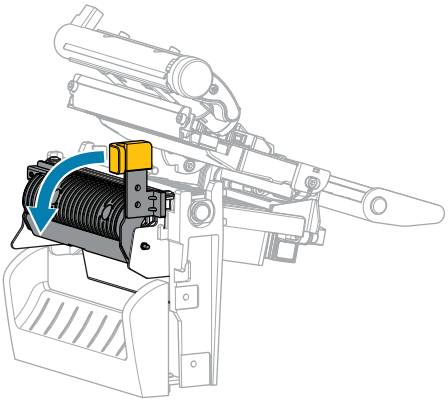

3. Remove any media liner to expose the pinch roller.

4. While manually rotating the pinch roller, clean it thoroughly with the swab from the Preventive Maintenance Kit (part number 47362). In place of the Preventive Maintenance Kit, you may use a clean swab dipped in 99.7% isopropyl alcohol. Allow the solvent to evaporate.

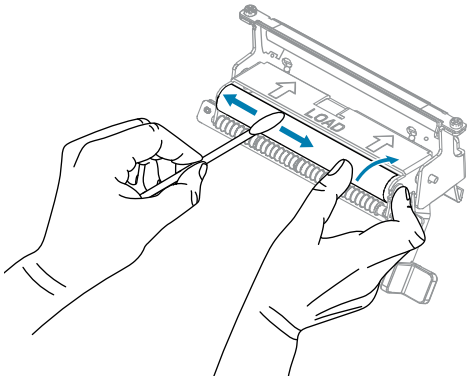

5. Use the swab to remove excess adhesive from the tear-off/peel-off bar. Allow the solvent to evaporate.

CAUTION—PRODUCT DAMAGE: Apply minimum force when cleaning the tear-off/peel-off bar. Excessive force can cause the tear-off/peel-off bar to bend, which could have a negative effect on peel performance.

6. Reload the media liner through the peel mechanism. For instructions, see .
7. Close the peel assembly using the peel-off mechanism release lever.

CAUTION: Use the peel-off mechanism release lever and your right hand to close the peel assembly. Do not use your left hand to assist in closing. The top edge of the peel roller/ assembly could pinch your fingers.

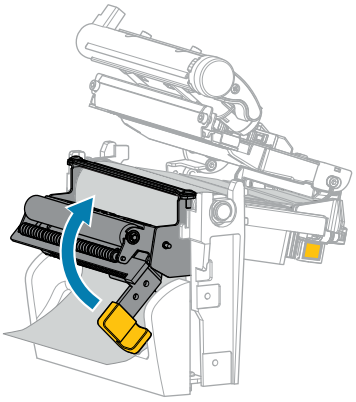

8. Close the media cover.

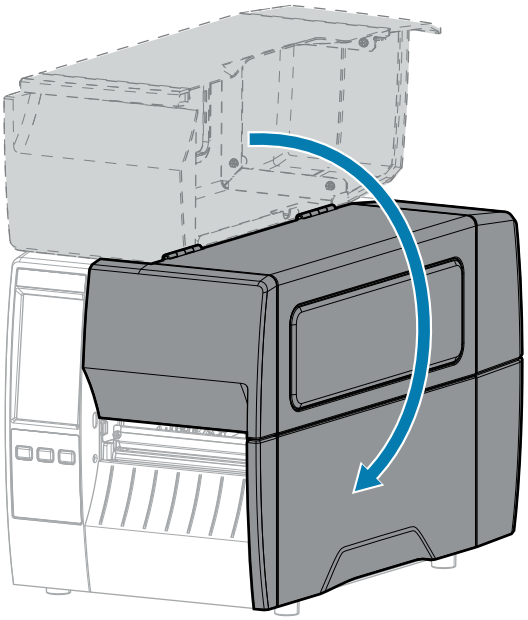

9. Press **PAUSE** to exit pause mode and enable printing.

   The printer may perform a label calibration or feed a label, depending on your settings.

Cleaning and Lubricating the Cutter Module

If the cutter is not cutting the labels cleanly or if it jams with labels, clean the cutter.

CAUTION: For personnel safety, always power off and unplug the printer before performing this procedure.

1. Open the media cover.

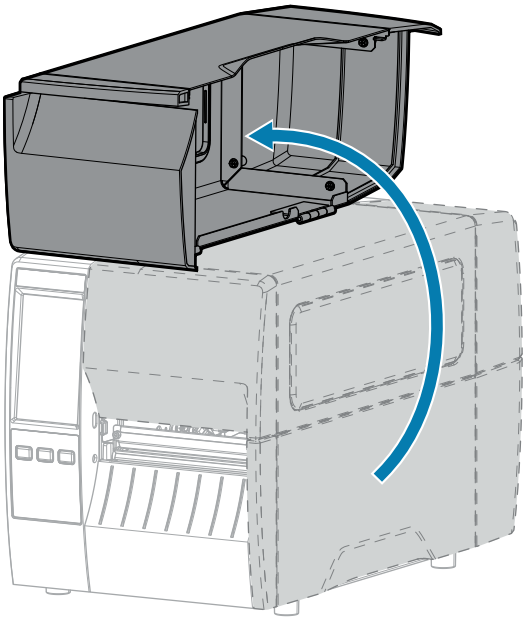

2. Turn off (O) the printer and disconnect the AC power cord.
3. Remove media that is loaded through the cutter module.
4. Loosen and remove the thumbscrew and lock washer on the cutter shield.

CAUTION: The cutter blade is sharp. Do not touch or rub the blade with your fingers.

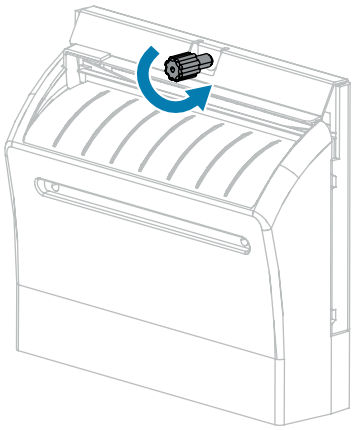

5. Remove the cutter shield.

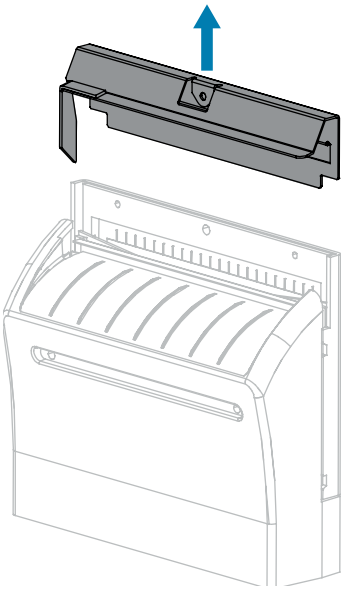

6. If necessary, rotate the cutter motor thumbscrew to fully expose the V-shaped cutter blade (1).

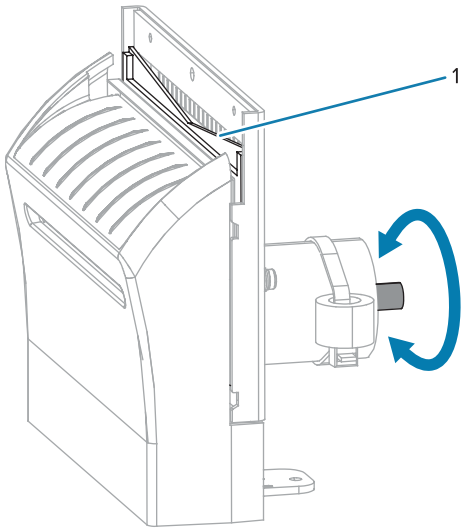

7. Using the swab from the Preventive Maintenance Kit (part number 47362), wipe along the upper cutting surface and the cutter blade. In place of the Preventive Maintenance Kit, you may use a clean swab dipped in 90% isopropyl alcohol. Allow the solvent to evaporate.

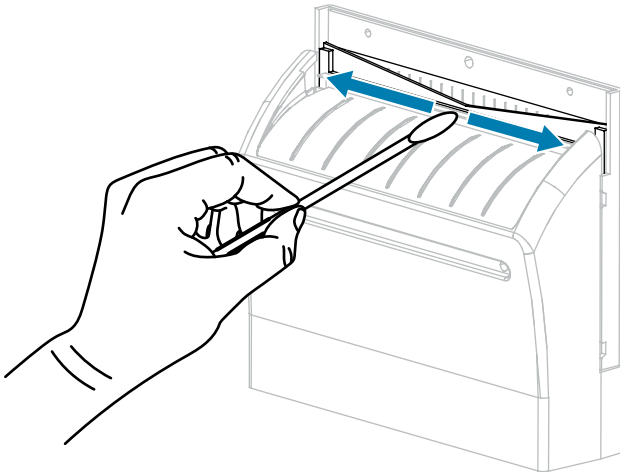

8. When the solvent has evaporated, soak a clean swab in a general-purpose, higher-viscosity silicone or PTFE oil lubricant.

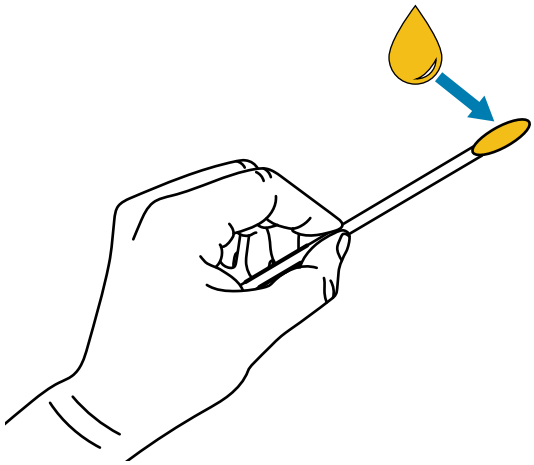

9. Apply an even layer along all exposed surfaces of both cutter blades. Remove any excess oil so that none of it comes in contact with the printhead or platen roller.

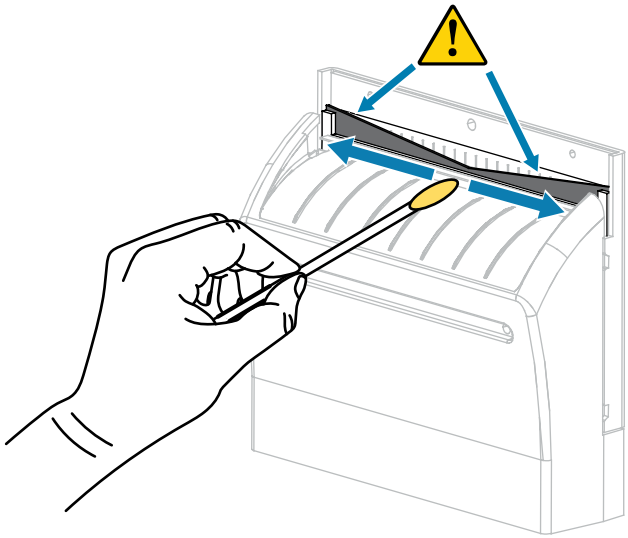

CAUTION: The cutter blade is sharp. For operator safety, replace the cutter shield.

10. Replace the cutter shield and secure it with the thumbscrew and lock washer that you removed earlier.

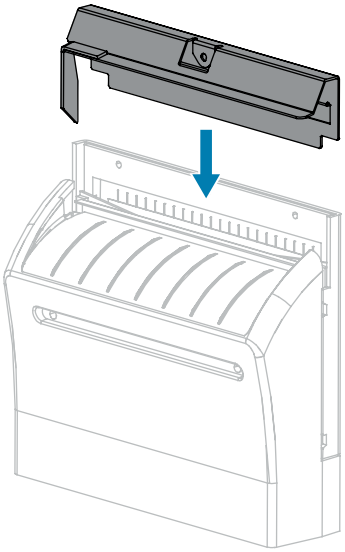

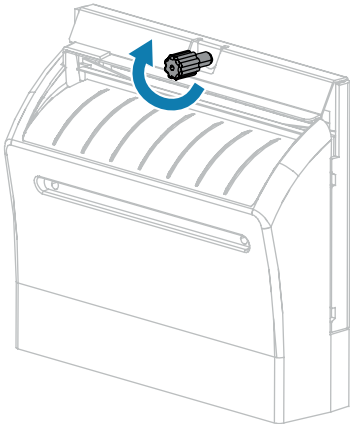

11. Close the media cover.

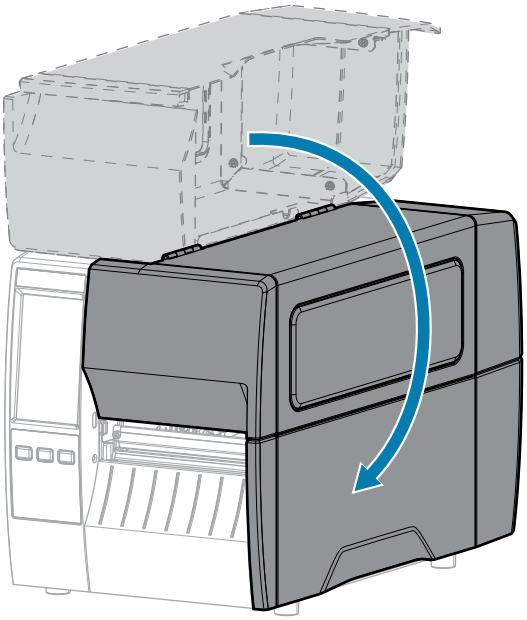

12. Plug the printer into its power source, and then turn on (I) the printer.

The cutter blade returns to its operating position.

13. If the cutter continues to perform unsatisfactorily, contact an authorized service technician.

Removing Used Ribbon

Remove used ribbon from the ribbon take-up spindle each time you change the roll of ribbon.

1. Has the ribbon run out?

If...	Then...
Ran out	Continue with the next step.
Did not run out	**a.** Cut or break the ribbon before the ribbon take-up spindle. 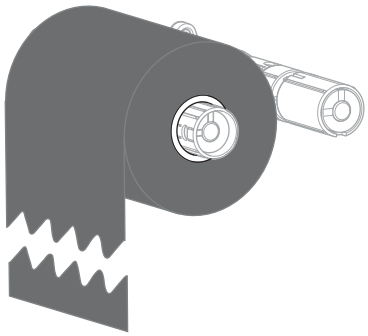 **b.** Continue with the next step.

2. Slide the core with the used ribbon off of the ribbon take-up spindle.

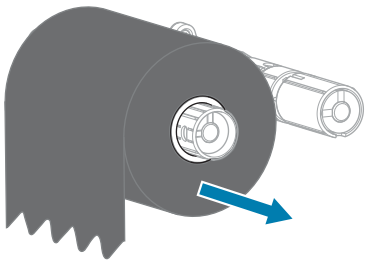

3. Discard the used ribbon. You may reuse the empty core from the ribbon supply spindle by moving it to the ribbon take-up spindle.
4. Reload the ribbon.

Replacing Printer Components

Some printer components, such as the printhead and platen roller, may wear out over time and can be replaced easily. Regular cleaning may extend the life of some of these components.

For more information on recommended cleaning intervals, see Cleaning Schedule and Procedures on page 125.

Ordering Replacement Parts

For optimal printing quality and proper printer performance across our product line, Zebra strongly recommends the use of genuine Zebra supplies as part of the total solution. Specifically, the ZT231 printers are designed to work only with genuine Zebra printheads, thus maximizing safety and print quality.

Contact your authorized Zebra reseller for part ordering information.

Recycling Printer Components

The majority of this printer's components are recyclable. The printer's main logic board may include a battery that you should dispose of properly.

Do not dispose of any printer components in unsorted municipal waste. Please dispose of the battery according to your local regulations, and recycle the other printer components according to your local standards. For more information, see zebra.com/environment.

Lubrication

The only lubrication needed for this printer is for the cutter module. Follow the instructions in Cleaning and Lubricating the Cutter Module on page 131. Do not lubricate any other parts of the printer.

CAUTION: Some commercially available lubricants will damage the finish and the mechanical parts if used on this printer.

Diagnostics and Troubleshooting

This section provides diagnostic tests and other information that may help you to optimize printing or to troubleshoot issues with your printer.

Go to zebra.com/zt231-info for access to videos and additional online information designed to assist you.

Evaluating Barcode Quality

The figure below shows how printer settings such as darkness and print speed can affect the quality of the printed barcodes.

Set the print darkness to the lowest setting that delivers good print quality. The Print Quality Assistant in Running the Print Wizard and Printing a Test Label on page 61 can help you determine the most optimal settings.

Figure 10 Barcode Darkness Comparison

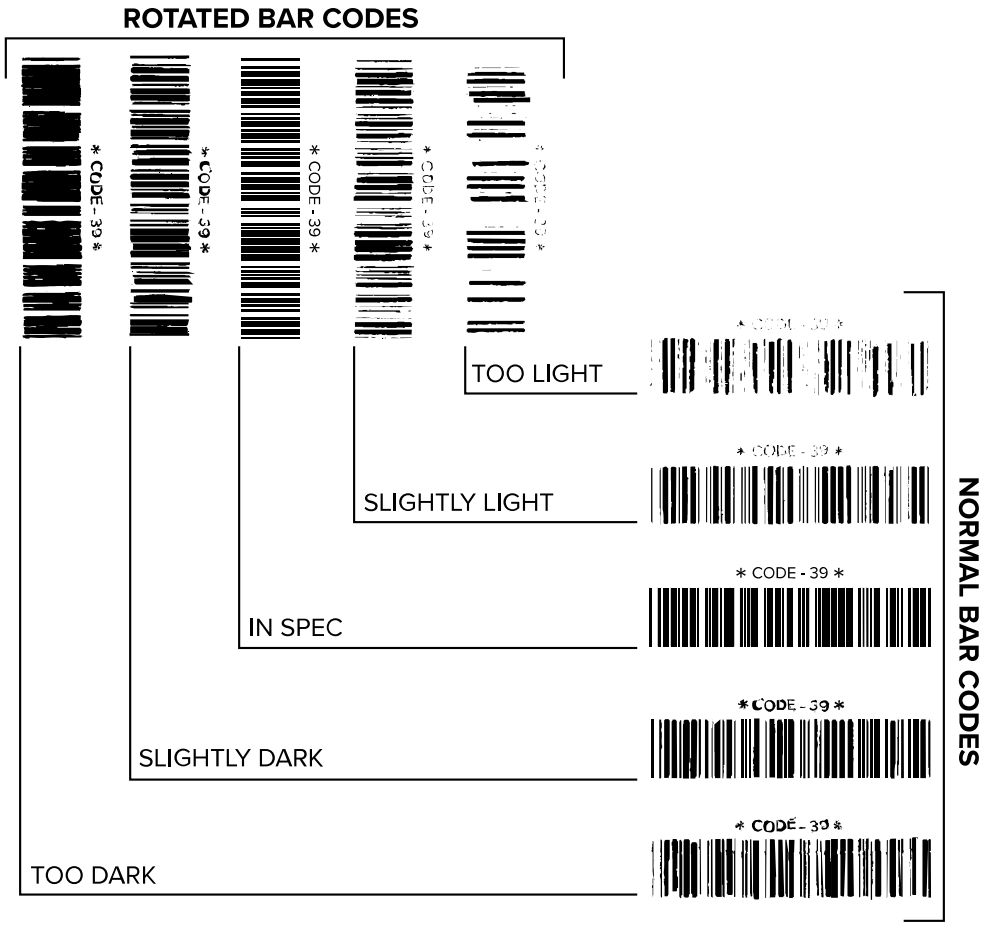

Appearance	Description
Too dark labels	Fairly obvious. These may be readable but are not “in-spec.” • The normal barcode bars increase in size. • The openings in small alphanumeric characters may fill in with ink. • Rotated barcode bars and spaces run together.
Slightly dark labels	Not as obvious as the too-dark labels. • The normal barcode will be “in-spec.” • Small alphanumeric characters will be bold, and may appear slightly filled in.

Appearance	Description
	• The rotated barcode spaces are small when compared to the “in-spec” code, possibly making the code unreadable.
“In-spec” labels	Whether or not a label is “in-spec” can only be confirmed by a verifier, but they typically exhibit some visible characteristics. • The normal barcode will have complete, even bars along with clear, distinct spaces. • The rotated barcode will have complete, even bars along with clear, distinct spaces. Although it may not look as good as a slightly dark barcode, the barcode will be “in-spec.” • In both normal and rotated styles, small alphanumeric characters will look complete.
Slightly light labels	In some cases, these are preferred to slightly dark ones for “in-spec” barcodes. • Both normal and rotated barcodes will be “in-spec,” but small alphanumeric characters may not be complete.
Too light labels	These are obvious. • Both normal and rotated barcodes have incomplete bars and spaces. • Small alphanumeric characters are unreadable.

Configuration Labels

Two of the most commonly used printer diagnostic items are the printer and network configuration labels. Analyzing the information on these labels can help you to troubleshoot potential issues.

To print a printer configuration label, touch **Menu** > **Settings** > **Print System Settings**.

Figure 11 Sample Printer Configuration Label

To print a network configuration label, touch **Menu** > **Networks** > **Print: Network Info**.

Figure 12 Sample Network Configuration Label

PAUSE Self-Test

This self test can be used to provide the test labels required when making adjustments to the printer's mechanical assemblies or to determine if any printhead elements are not working.

The following shows a sample printout.

Figure 13 PAUSE Test Label

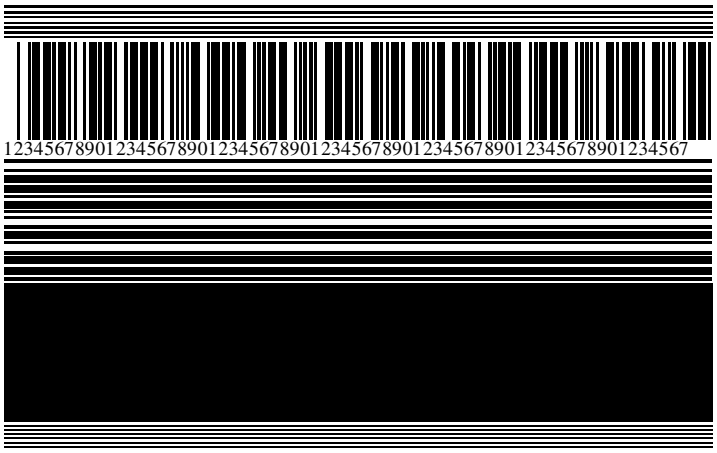

1. Turn off (**O**) the printer.
2. Press and hold **PAUSE** while turning on (**I**) the printer. Hold **PAUSE** until the first control panel light turns off.

   The initial self test prints 15 labels at the printer's slowest speed, and then automatically pauses the printer. Each time **PAUSE** is pressed, an additional 15 labels print.

   While the printer is paused:

   - Pressing **CANCEL** alters the self test. Each time **PAUSE** is pressed, 15 labels print at 152 mm (6 in.) per second.
   - Pressing **CANCEL** again alters the self test a second time. Each time **PAUSE** is pressed, 50 labels print at the printer's slowest speed.
   - Pressing **CANCEL** again alters the self test a third time. Each time **PAUSE** is pressed, 50 labels print at 152 mm (6 in.) per second.
   - Pressing **CANCEL** again alters the self test a fourth time. Each time **PAUSE** is pressed, 15 labels print at the printer's maximum speed.
3. To exit this self test at any time, press and hold **CANCEL**.

Sensor Profile

Tap **Menu** > **Print** > **Sensors** > **Print: Sensor Profile** to print a sensor profile image. The image will extend across several actual labels or tags.

Use the sensor profile image to troubleshoot the following situations:

- The printer experiences difficulty in determining gaps (web) between labels.
- The printer incorrectly identifies preprinted areas on a label as gaps (web).
- The printer cannot detect ribbon.

Compare your results to the examples shown in this section. If the sensitivity of the sensors must be adjusted, calibrate the printer. (See Calibrating the Ribbon and Media Sensors on page 116.)

Ribbon Sensor Profile

The line labeled RIBBON (1) on the sensor profile indicates the ribbon sensor readings. The ribbon sensor threshold setting is indicated by OUT (2). If the ribbon readings are below the threshold value, the printer does not acknowledge that ribbon is loaded.

Figure 14 Sensor Profile (Ribbon Section)

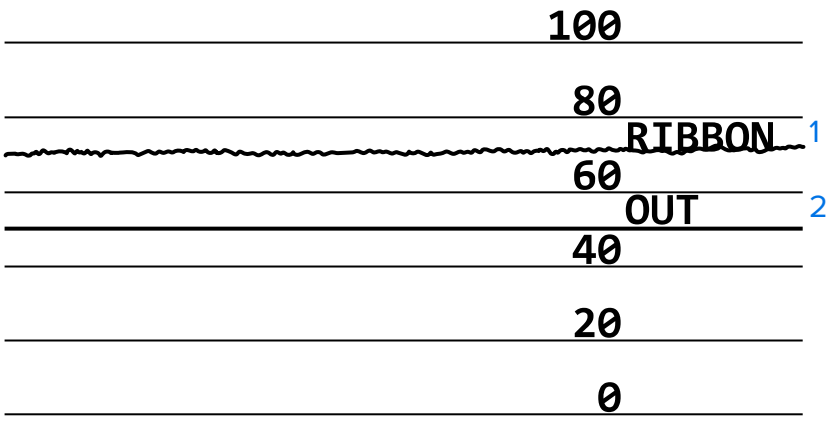

Media Sensor Profile

The line labeled MEDIA (1) on the sensor profile indicates the media sensor readings. The media sensor threshold settings are indicated by WEB (2). The media out threshold is indicated by OUT (3). The upward or downward spikes (4) indicate divisions between labels (the web, notch, or black mark), and the lines between the spikes (5) indicate where labels are located.

If you compare the sensor profile printout to a length of your media, the spikes should be the same distance apart as the gaps on the media. If the distances are not the same, the printer may be having difficulty determining where the gaps are located.

Figure 15 Media Sensor Profile (Gap/Notch Media)

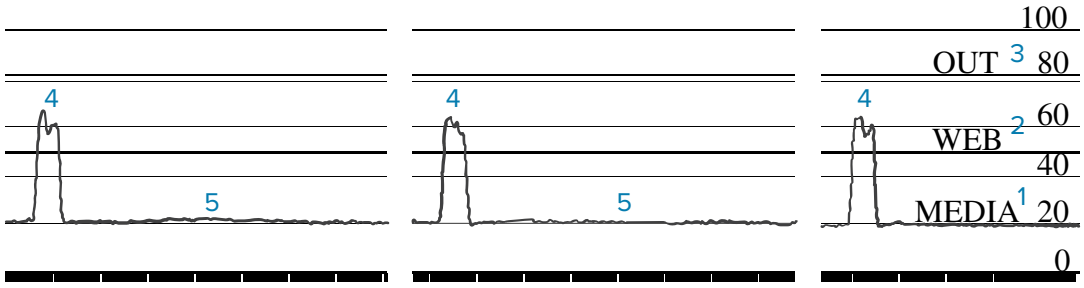

Figure 16 Media Sensor Profile (Black Mark Media)

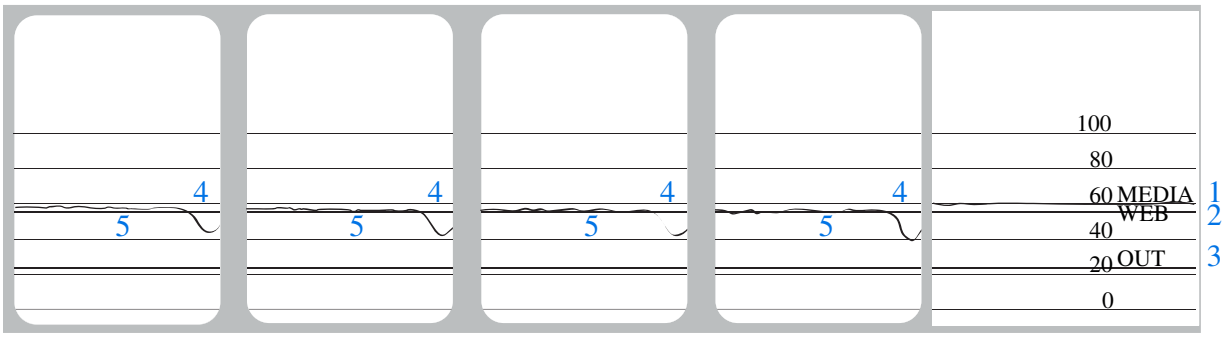

Using Communication Diagnostics Mode

The communication diagnostics test is a troubleshooting tool for checking the interconnection between the printer and the host computer. When the printer is in diagnostics mode, it prints all data received from the host computer as straight ASCII characters with the hex values below the ASCII text. The printer prints all characters received, including control codes such as CR (carriage return). Figure 17 Sample Communications Diagnostics Mode Label on page 146 shows a typical test label from this test.

NOTE: The test label prints upside-down.

Figure 17 Sample Communications Diagnostics Mode Label

```
^FS^FO394,25^AA
5E 46 53 5E 46 4F 33 39 34 2C 32 35 5E 41 41
N,18,10^FD(0000
4E 2C 31 38 2C 31 30 5E 46 44 28 30 30 30 30
)999-9999^FS
29 39 39 39 2D 39 39 39 39 5E 46 53 0D 0A
^FO0,50^AAN,18,
5E 46 4F 30 2C 35 30 5E 41 41 4E 2C 31 38 2C
10^FDCENTER STA
31 30 5E 46 44 43 45 4E 54 45 52 20 53 54 41
```

1. Set the label width equal to or less than the actual media width being used for the test. Tap **Menu** > **Print** > **Print Quality** > **Label Width** to access the label width setting.
2. Tap **Menu** > **System** > **Program Language**, and set the **Diagnostic Mode** option to **ENABLED**.

   The printer enters diagnostics mode and prints any data received from the host computer on a test label.
3. Check the test label for error codes. For any errors, check that your communication parameters are correct.

   Errors show on the test label as follows:

   - `FE` indicates a framing error.
   - `OE` indicates an overrun error.
   - `PE` indicates a parity error.
   - `NE` indicates noise.
4. To exit this self test and return to normal operation, power cycle the printer or set the Diagnostic Mode option to **DISABLED**.

Loading Defaults or Last Saved Values

Restoring the printer to default values or to the last saved values can help if things are not working as expected.

Touch **Menu** > **System** > **Settings** > **Restore Defaults** to see the available options.

RESTORE PRINTER	Restores all printer settings other than the network settings back to the factory defaults. Use care when loading defaults because you will need to reload all settings that you changed manually.
RESTORE NETWORK	Reinitializes the printer's wired or wireless print server. With a wireless print server, the printer also reassociates with your wireless network.
RESTORE LAST SAVED	Loads settings from the last permanent save.

See System > Settings > Restore Defaults for additional ways to restore these values.

Alert and Error States

If the background color of the Home screen changes, you may need to take an action to restore the printer to a Ready status.

- Red and yellow backgrounds typically halt printing until the issue is resolved.
- Informational messages with a green background usually disappear without user intervention, and printing continues as normal.
- Touch **Reprint** to print the last label printed. If the button is not visible, no label format is available to reprint

Touch the icons in the bar at the top of the Home screen to view the error, alert, or informational message. See Alerts and Error Messages on page 149 for recommended actions.

Alerts and Error Messages

Display	Possible Causes	Recommended Solutions
Head Open Printhead is open. Close the printhead.	The printhead is not fully closed.	Close the printhead completely.
	The printhead open sensor is not working properly.	Call a service technician to replace the sensor.
Media Out Media is out. Load additional media.	The media is not loaded or is loaded incorrectly.	Load media correctly. See Loading the Media on page 39.
	Misaligned media sensor.	Check the position of the media sensor.
	The printer is set for non-continuous media, but continuous media is loaded.	**1.** Install the proper media type, or reset printer for the current media type. **2.** Calibrate the printer. See Calibrating the Ribbon and Media Sensors on page 116.

Display	Possible Causes	Recommended Solutions
Paper Jam Media jammed. Check the media.	There is an issue with the media in the media path.	**1.** Check for media that is loaded incorrectly or stuck to components in the media path. **2.** Check if media is wrapped around the platen roller. Carefully remove any labels. If necessary, clean the platen roller to remove adhesive (see Cleaning the Printhead and Platen Roller).
Paper Error Media error. Check or load the media.	The linerless cutter experienced a media jam, or the linerless media wrapped around the platen roller.	Refer to the PAPER ERROR recommendations in Linerless Printing or Cutter Issues.
Ribbon Out Ribbon is out. Replace the ribbon.	In thermal transfer mode: • ribbon is not loaded • ribbon is loaded incorrectly • the ribbon sensor is not detecting ribbon • media is blocking the ribbon sensor	**1.** Load the ribbon correctly. See Loading the Ribbon on page 58. **2.** Calibrate the printer. See Calibrating the Ribbon and Media Sensors on page 116.
	In thermal transfer mode, the printer did not detect the ribbon even though it is loaded correctly.	Calibrate the printer. See Calibrating the Ribbon and Media Sensors on page 116 or load printer defaults by touching **Menu** > **System** > **Settings** > **Restore Defaults** > **Restore Printer**.
	If you are using direct thermal media, the printer is waiting for ribbon to be loaded because it is incorrectly set for thermal transfer mode.	Set the printer for Direct Thermal mode. See Print > Print Quality > Print Type.

Display	Possible Causes	Recommended Solutions
Ribbon In Ribbon was detected in Direct Thermal mode. Remove the ribbon.	Ribbon is loaded, but the printer is set for direct thermal mode.	Ribbon is not required with direct thermal media. If you are using direct thermal media, remove the ribbon. This error message will not affect printing.
		If the message persists with no ribbon in the printer, Calibrate the printer. See Calibrating the Ribbon and Media Sensors on page 116.
		If you are using thermal transfer media, which requires ribbon, set the printer for Thermal Transfer mode. See Determining the Media Handling Method on page 38.
Head Identification Failed Printhead is not a Zebra Certified Product Replace the Printhead	The printhead was replaced with one that is not a genuine Zebra printhead.	Install a genuine Zebra printhead.
	There is an issue with the printhead.	Turn the printer off and then back on to see if the error repeats. If it does, replace the printhead.
Head Element Out A printhead element failed. The printhead may need to be replaced.	A printhead element is no longer working.	If the location of the failed element affects printing, replace the printhead.
Replace Printhead Replace the printhead.	The printhead is nearing the end of its life and should be replaced.	Replace the printhead.
Head Maintenance Needed Clean the printhead.	The printhead needs to be cleaned.	Follow the cleaning instructions in Cleaning the Printhead and Platen Roller on page 126.

Display	Possible Causes	Recommended Solutions
Head Over Temp Printhead is too hot. All printing is halted.	**CAUTION: HOT SURFACE:** The printhead may be hot enough to cause severe burns. Allow the printhead to cool.	
	The printhead is over temperature.	Allow the printer to cool. Printing automatically resumes when the printhead elements cool to an acceptable operating temperature. If this error persists, consider changing where the printer is located or using a slower print speed.
The printer shows one of these messages, or it cycles back and forth between them: Head Under Temp Printhead is too cold. All printing is halted. Head Thermistor Fault Faulty thermistor detected. Replace the printhead.	**CAUTION: HOT SURFACE:** An improperly connected printhead data or power cable can cause these error messages. The printhead may be hot enough to cause severe burns. Allow the printhead to cool.	
	The printhead data cable is not properly connected.	Hook up the printhead properly.
	The printhead has a faulty thermistor.	Replace the printhead.
Head Under Temp Printhead is too cold. All printing is halted.	**CAUTION: HOT SURFACE:** An improperly connected printhead data or power cable can cause this error message. The printhead may be hot enough to cause severe burns. Allow the printhead to cool.	
	The printhead temperature is approaching its lower operating limit.	Continue printing while the printhead reaches the correct operating temperature. If the error remains, the environment may be too cold for proper printing. Relocate the printer to a warmer area.
	The printhead data cable is not properly connected.	Hook up the printhead properly.
	The printhead has a faulty thermistor.	Replace the printhead.

Display	Possible Causes	Recommended Solutions
Cutter Error A cutter error occurred. Restart the printer.	**CAUTION:** The cutter blade is sharp. Do not touch or rub the blade with your fingers. **NOTE:** If you have the linerless cutter option installed, go to Linerless Printing Issues for troubleshooting information.	
	The cutter blade is in the media path.	Turn off the printer power and unplug the printer. Inspect the cutter module for debris and clean as needed following the cleaning instructions in Cleaning and Lubricating the Cutter Module on page 131.
Out of Memory Storing XXX XXX not stored. Out of memory.	There is not enough memory to perform the function specified.	Free up some of the printer's memory by adjusting the label format or printer parameters. One way to free up memory is to adjust the print width to the actual width of the label instead of leaving the print width set to the default.
		Ensure that the data is not directed to a device that is not installed or is unavailable.
		If the problem persists, call a service technician.

Indicator Lights

The indicator lights located above the printer's display also communicate the printer's status.

Table 6 Status of Printer As Shown by Indicator Lights

Indicator Lights	What they indicate
STATUS PAUSE DATA SUPPLIES NETWORK STATUS light steady green (other lights steady yellow for 2 seconds during printer power-up).	The printer is ready.
STATUS PAUSE DATA SUPPLIES NETWORK PAUSE light steady yellow.	The printer is paused.

Table 6 Status of Printer As Shown by Indicator Lights (Continued)

Indicator Lights	What they indicate
STATUS PAUSE DATA SUPPLIES NETWORK STATUS light steady red. SUPPLIES light steady red.	The media supply is out. The printer needs attention and cannot continue without user intervention.
STATUS PAUSE DATA SUPPLIES NETWORK STATUS light steady red. SUPPLIES light flashing red.	The ribbon supply is out. The printer needs attention and cannot continue without user intervention.
STATUS PAUSE DATA SUPPLIES NETWORK STATUS light steady yellow. SUPPLIES light flashing yellow.	The printer is in Direct Thermal mode, which does not require ribbon; however, ribbon is installed in the printer.
STATUS PAUSE DATA SUPPLIES NETWORK STATUS light steady red. PAUSE light steady yellow.	The printhead is open. The printer needs attention and cannot continue without user intervention.
STATUS PAUSE DATA SUPPLIES NETWORK STATUS light steady yellow.	The printhead is over temperature. **CAUTION—HOT SURFACE:** The printhead may be hot and could cause severe burns. Allow the printhead to cool.
STATUS PAUSE DATA SUPPLIES NETWORK STATUS light flashing yellow.	Indicates one of the following: • The printhead is under temperature. **CAUTION:** This display message can be incorrect. The printhead may be hot and could cause severe burns. Allow the printhead to cool. • The main logic board (MLB) or power supply is over temperature.
STATUS PAUSE DATA SUPPLIES NETWORK STATUS light steady red. PAUSE light steady red. DATA light steady red.	The printhead was replaced with one that is not a genuine Zebra printhead. Install a genuine Zebra printhead to continue.

Table 6 Status of Printer As Shown by Indicator Lights (Continued)

Indicator Lights	What they indicate
STATUS PAUSE DATA SUPPLIES NETWORK STATUS light flashing red.	The printer is unable to read the dpi setting of the printhead.
STATUS PAUSE DATA SUPPLIES NETWORK STATUS light steady red.	This indicates an error with the cutter. The cutter blade is in the media path. **CAUTION:** The cutter blade is sharp. Do not touch or rub the blade with your fingers.
Printers with a ZebraNet wired Ethernet option	
STATUS PAUSE DATA SUPPLIES NETWORK NETWORK light off.	No Ethernet link is available.
STATUS PAUSE DATA SUPPLIES NETWORK NETWORK light steady green.	A 100 Base-T link was found.
STATUS PAUSE DATA SUPPLIES NETWORK NETWORK light steady yellow.	A 10 Base-T link was found.
STATUS PAUSE DATA SUPPLIES NETWORK NETWORK light steady red.	An Ethernet error condition exists. The printer is not connected to your network.
Printers with a ZebraNet wireless option	

Table 6 Status of Printer As Shown by Indicator Lights (Continued)

Indicator Lights	What they indicate
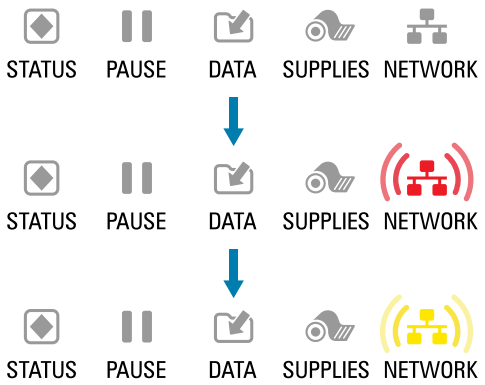 NETWORK light off. The light flashes red while the printer associates with the network. The light then flashes yellow while the printer is authenticating with the network.	A radio was found during power-up. The printer is attempting to associate with the network.
 NETWORK light steady green.	The radio is associated with your network and authenticated, and the WLAN signal is strong.
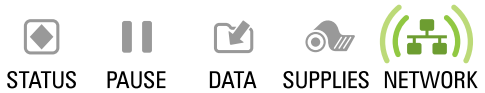 NETWORK light flashing green.	The radio is associated with your network and authenticated, but the WLAN signal is weak.
 NETWORK light steady red.	A WLAN error condition exists. The printer is not connected to your network.

Troubleshooting

Use this information to troubleshoot issues with the printer.

Printing or Print Quality Issues

Issue	Possible Cause	Recommended Solution
The barcode printed on a label does not scan.	The barcode is not within specifications because the printer is set at an incorrect darkness level or the printhead pressure is off.	**1.** Perform the steps in Running the Print Wizard and Printing a Test Label on page 61. **2.** If necessary, manually adjust the darkness or print speed settings. • Set the print darkness to the lowest setting that provides good print quality. If you set the darkness too high, the label image may print unclearly, barcodes may not scan correctly, the ribbon may burn through, or the printhead may wear prematurely. • Slower print speeds typically yield better print quality. Access the darkness and print speed settings from the Home screen by touching **Menu** > **Print** > **Print Quality**. **3.** Set the printhead pressure to the minimum needed for good print quality. See Adjusting the Printhead Pressure on page 120.
	There is not enough blank space around the barcode.	Leave at least 3.2 mm (1/8 in.) between the barcode and other printed areas on the label and between the barcode and the edge of the label.
My label prints too small (or too large)	The wrong printer driver is being used, or other settings are not correct for your printing application.	Check the printer driver or software communications settings (if applicable) for your connection. You may wish to reinstall the printer driver following the instructions in Connecting the Printer to a Device on page 19.
Smudge marks on labels	The media or ribbon is not designed for high-speed operation.	Replace supplies with those recommended for high-speed operation. For more information, see zebra.com/supplies.
Poor results with thick labels	Incorrect printhead pressure.	Set the printhead pressure to the minimum needed for good print quality. See Adjusting the Printhead Pressure on page 120.

Issue	Possible Cause	Recommended Solution
Printing is too light or too dark over the entire label	The media or ribbon is not designed for high-speed operation.	Replace supplies with those recommended for high-speed operation. For more information, see zebra.com/supplies.
	The printer is set at an incorrect darkness level.	For optimal print quality, set the darkness to the lowest possible setting for your application. **1.** Perform the steps in Running the Print Wizard and Printing a Test Label on page 61. **2.** If necessary, manually adjust the darkness or print speed settings. • Set the print darkness to the lowest setting that provides good print quality. If you set the darkness too high, the label image may print unclearly, barcodes may not scan correctly, the ribbon may burn through, or the printhead may wear prematurely. • Slower print speeds typically yield better print quality. Access the darkness and print speed settings from the Home screen by touching **Menu** > **Print** > **Print Quality**.
	You are using an incorrect combination of media and ribbon for your application.	Switch to a different type of media or ribbon to try to find a compatible combination. If necessary, consult your authorized Zebra reseller or distributor for information and advice.
	Incorrect printhead pressure.	Set the printhead pressure to the minimum needed for good print quality. See Adjusting the Printhead Pressure on page 120.
Printing is too light or too dark on one side of the label	Uneven printhead pressure.	Adjust the printhead pressure as needed for good print quality. See Adjusting the Printhead Pressure on page 120

Issue	Possible Cause	Recommended Solution
General print quality issues	The printer is set at an incorrect print speed or darkness level. Keep in mind that printer settings may be affected by the driver or software being used.	For optimal print quality, set the darkness to the lowest possible setting for your application. **1.** Perform the steps in Running the Print Wizard and Printing a Test Label on page 61. **2.** If necessary, manually adjust the darkness or print speed settings. • Set the print darkness to the lowest setting that provides good print quality. If you set the darkness too high, the label image may print unclearly, barcodes may not scan correctly, the ribbon may burn through, or the printhead may wear prematurely. • Slower print speeds typically yield better print quality. Access the darkness and print speed settings from the Home screen by touching **Menu** > **Print** > **Print Quality**.
	You are using an incorrect combination of labels and ribbon for your application.	Switch to a different type of media or ribbon to try to find a compatible combination. If necessary, consult your authorized Zebra reseller or distributor for information and advice.
	The printhead is dirty.	Clean the printhead and platen roller. See Cleaning the Printhead and Platen Roller on page 126.
	Incorrect or uneven printhead pressure.	Set the printhead pressure to the minimum needed for good print quality. See Adjusting the Printhead Pressure on page 120.
	The label format is scaling a font that is not scalable.	Check the label format for font issues.
Fine, angular gray lines on blank labels	Wrinkled ribbon.	See wrinkled ribbon causes and solutions in Miscellaneous Issues on page 169.
Long tracks of missing print on several labels	Print element damaged.	Call a service technician for assistance.
	Wrinkled ribbon.	See wrinkled ribbon causes and solutions in Ribbon Issues on page 161.

Issue	Possible Cause	Recommended Solution
Loss of printing registration on labels Excessive vertical drift in top-of-form registration	The platen roller is dirty.	Clean the printhead and platen roller. See Cleaning the Printhead and Platen Roller on page 126.
	Media guides are positioned improperly.	Ensure that the media guides are properly positioned. See Loading the Media on page 39.
	The media type is set incorrectly.	Set the printer for the correct media type (gap/notch, continuous, or mark).
	The media is loaded incorrectly.	Load media correctly. See Loading the Media on page 39.
Misregistration/skips labels	The printer is not calibrated.	Calibrate the printer. See Calibrating the Ribbon and Media Sensors on page 116.
	Improper label format.	Check your label format, and correct it as necessary.
Misregistration and misprint of one to three labels	The platen roller is dirty.	Clean the printhead and platen roller. See Cleaning the Printhead and Platen Roller on page 126.
	Media does not meet specifications.	Use media that meets specifications. See Media Specifications on page 192.
Vertical drift in top-of-form position	The printer is out of calibration.	Calibrate the printer. See Calibrating the Ribbon and Media Sensors on page 116.
	The platen roller is dirty.	Clean the printhead and platen roller. See Cleaning the Printhead and Platen Roller on page 126.
Horizontal movement in placement of the label image.	The previous labels were torn off incorrectly.	Pull down and to the left when tearing off labels so that the tear-off bar assists in tearing through the label backing. Pulling up or down and to the right can shift the media sideways.
Vertical image or label drift	The printer is using non-continuous labels but is configured in continuous mode.	Set the printer for the correct media type (gap/notch, continuous, or mark) and calibrate the printer, if necessary. See Calibrating the Ribbon and Media Sensors on page 116.
	The media sensor is calibrated improperly.	Calibrate the printer. See Calibrating the Ribbon and Media Sensors on page 116.
	The platen roller is dirty.	Clean the printhead and platen roller. See Cleaning the Printhead and Platen Roller on page 126.
	Improper printhead pressure settings (toggles).	Adjust the printhead pressure to ensure proper functionality. See Adjusting the Printhead Pressure on page 120.

Issue	Possible Cause	Recommended Solution
	The media or ribbon is loaded incorrectly.	Ensure that the media and ribbon are loaded correctly. See Loading the Ribbon on page 58 and Loading the Media on page 39.
	Incompatible media.	You must use media that meets the printer specifications. Ensure that the interlabel gaps or notches are 2 to 4 mm and consistently placed. See Media Specifications on page 192.

Ribbon Issues

Issue	Possible Cause	Recommended Solution
Broken or melted ribbon	Darkness is set too high.	**1.** Perform the steps in Running the Print Wizard and Printing a Test Label on page 61. **2.** If necessary, manually adjust the darkness or print speed settings. • Set the print darkness to the lowest setting that provides good print quality. If you set the darkness too high, the label image may print unclearly, barcodes may not scan correctly, the ribbon may burn through, or the printhead may wear prematurely. • Slower print speeds typically yield better print quality. Access the darkness and print speed settings from the Home screen by touching **Menu** > **Print** > **Print Quality**. **3.** Clean the printhead thoroughly. See Cleaning the Printhead and Platen Roller on page 126.
	The ribbon is coated on the wrong side and cannot be used in this printer.	Replace the ribbon with one coated on the correct side. For more information, see Ribbon on page 14.
Wrinkled ribbon	Ribbon was loaded incorrectly.	Load the ribbon correctly. See Loading the Ribbon on page 58.

Issue	Possible Cause	Recommended Solution
	Incorrect burn temperature.	**1.** Perform the steps in Running the Print Wizard and Printing a Test Label on page 61. **2.** If necessary, manually adjust the darkness or print speed settings. • Set the print darkness to the lowest setting that provides good print quality. If you set the darkness too high, the label image may print unclearly, barcodes may not scan correctly, the ribbon may burn through, or the printhead may wear prematurely. • Slower print speeds typically yield better print quality. Access the darkness and print speed settings from the Home screen by touching **Menu** > **Print** > **Print Quality**.
	Incorrect or uneven printhead pressure.	Set the printhead pressure to the minimum needed for good print quality. See Adjusting the Printhead Pressure on page 120.
	Media not feeding properly; “walking” from side to side.	Adjust the media guide until it just touches the edge of the media. If this does not solve the issue, check the printhead pressure. See Adjusting the Printhead Pressure on page 120. If necessary, call a service technician.
	The printhead or platen roller may be installed incorrectly.	Verify, if you can, that they are installed correctly. If necessary, call a service technician.
The printer does not detect when the ribbon runs out.	The printer may have been calibrated without ribbon or without the ribbon loaded properly.	**1.** Make sure that ribbon is loaded correctly so that it can be detected by the ribbon sensor. Under the printhead, the ribbon should track all the way back, near the printer’s firewall. See Loading the Ribbon on page 58. **2.** Calibrate the printer. See Calibrating the Ribbon and Media Sensors on page 116.
In thermal transfer mode, the printer did not detect the ribbon even though it is loaded correctly.		
The printer indicates that ribbon is out, even though the ribbon is loaded correctly.	The printer was not calibrated for the label and ribbon being used.	Calibrate the printer. See Calibrating the Ribbon and Media Sensors on page 116.

Printer Connectivity Issues

Issue	Possible Cause	Recommended Solution
My printer reassigns a new IP address to the print server after the printer has been off for a while.	The settings for your network are causing the network to reassign a new IP address.	If the changing IP addresses cause issues for you, follow these steps to assign a static IP address to the printer: **1.** Find out what values need to be assigned to the IP address, subnet mask, and gateway for your print server (wired, wireless, or both). **2.** Change the appropriate IP protocol value to PERMANENT. **3.** Change the values for the IP address, subnet mask, and gateway for the appropriate print server to what you want them to remain. **4.** Reset the network by touching **Menu** > **Connection** > **Networks** > **Reset Network** and then touching the check mark to save the changes.
My printer does not obtain an IP address while trying to connect via LAN/ Ethernet.	The cable is not plugged in correctly.	Check that both ends of the cable are connected properly.
	The printer is not configured correctly (usually for DHCP).	Check the Wired IP Protocol setting. It should match your network environment.
I cannot change the wired, wireless, or Bluetooth settings on my printer.	The printer is in Protected Mode, which prevents these settings from being updated without the Protected Mode password. You cannot change these settings through the front panel.	You will need the Protected Mode password to change the settings via JSON commands. For more information, refer to the Zebra Link-OS PrintSecure Printer Administration Guide.
	For printers purchased in the EMEA region after August 1, 2025, many connectivity options are disabled by default.	For additional information and a configuration wizard, go to zebra.com/asr.

Issue	Possible Cause	Recommended Solution
I manually entered a wireless IP address, subnet, and gateway on my printer, but it won't connect to my wireless network. Protected Mode is not enabled.	The printer's network must be reset after values are changed.	Reset the network by touching **Menu** > **Connection** > **Networks** > **Reset Network** and then touching the check mark to save the changes.
	An ESSID value was not specified.	**1.** For a wireless connection, specify the ESSID value that matches the value used by your wireless router using the following Set/Get/Do command: `! U1 setvar "wlan.essid" "value"` where "value" is the ESSID (sometimes called a network SSID) for your router. You can look on the back of your router for a sticker with the router's default information. **NOTE:** If the information has been changed from the default, check with your network administrator for the ESSID value to use. **2.** Reset the network by touching **Menu** > **Connection** > **Networks** > **Reset Network** and then touching the checkmark to save the changes.
	The ESSID or another value was incorrect.	**1.** Print a network configuration label and verify that your values are correct. **2.** Make corrections as necessary. **3.** Reset the network by touching **Menu** > **Connection** > **Networks** > **Reset Network** and then touching the check mark to save the changes.

Communications Issues

Issue	Possible Cause	Recommended Solution
Label Formats Not Recognized		
A label format was sent to the printer but was not recognized. The DATA light does not flash.	The communication parameters are incorrect.	Check the printer driver or software communications settings (if applicable) for your connection. You may wish to reinstall the printer driver following the instructions in Connecting the Printer to a Device on page 19.
A label format was sent to the printer but was not recognized. The DATA light flashes but no printing occurs.	The prefix and delimiter characters set in the printer do not match the ones in the label format.	Verify the prefix and delimiter characters using the following SGD commands. Modify the values if necessary. • `! U1 getvar "zpl.format_prefix"` • `! U1 getvar "zpl.delimiter"`
	Incorrect data is being sent to the printer.	Check the communication settings on the computer. Ensure that they match the printer settings.
		If the problem persists, check the label format.
	The printer has an emulation active.	Verify that the label format matches the printer settings.
Labels Stop Printing Correctly		
A label format was sent to the printer. Several labels print, then the printer skips, misplaces, misses, or distorts the image on the label.	The serial communication settings are incorrect.	Ensure that the flow control settings match.
		Check the communication cable length. See Communication Interface Specifications on page 187 for requirements.
		Check the printer driver or software communications settings (if applicable).

RFID Issues

Issue	Possible Cause	Recommended Solution
The printer stops at the RFID inlay.	The printer calibrated the label length only to the RFID inlay instead of to the interlabel gap.	**1.** Tap **Menu** > **System** > **Settings**, and then select FEED for the Power Up and Head Close actions. **2.** Manually calibrate the printer. See Performing Manual Sensor Calibration on page 116.
The printer voids every label.	The printer is not calibrated for the media being used.	Manually calibrate the printer. See Performing Manual Sensor Calibration on page 116.)
	You are using an RFID label with a tag type that is not supported by your printer.	These printers support only Gen 2 RFID labels. For more information, refer to RFID Programming Guide 3, or contact an authorized Zebra RFID reseller.
	The printer is unable to communicate with the RFID reader.	**1.** Turn off (**O**) the printer. **2.** Wait 10 seconds. **3.** Turn on (**I**) the printer. **4.** If the problem persists, you may have a bad RFID reader or a loose connection between the RFID reader and the printer. Contact Technical Support or an authorized Zebra RFID service technician for assistance.
	Radio frequency (RF) interference from another RF source.	Do one or more of the following as necessary: • Move the printer away from fixed RFID readers or other RF sources. • Make sure that the media door is closed at all times during RFID programming.
	The settings are incorrect in your label designer software.	The software settings override the printer settings. Make sure that the software and printer settings match.
	You are using an incorrect programming position, particularly if the tags being used are within printer specifications.	Do one or more of the following as necessary: • Check the RFID programming position or the program position setting in your label designer software. If the position is incorrect, change the setting. • Restore the RFID programming position back to the default value. For more information, refer to RFID Programming Guide 3. For transponder placement details, go to zebra.com/transponders.

Issue	Possible Cause	Recommended Solution
	You are sending RFID ZPL or SGD commands that are incorrect.	Check your label formats. For more information, refer to RFID Programming Guide 3.
Low yields. Too many RFID tags per roll are voided.	The RFID labels are not within specifications for the printer, which means that the transponder is not in an area that can be programmed consistently.	Make sure that the labels meet transponder placement specifications for your printer. See zebra.com/transponders for transponder placement information. For more information, refer to RFID Programming Guide 3, or contact an authorized Zebra RFID reseller.
	Incorrect read and write power levels.	Change the RFID read and write power levels. For instructions, refer to RFID Programming Guide 3.
	Radio frequency (RF) interference from another RF source.	Do one or more of the following as necessary: • Move the printer away from fixed RFID readers. • Make sure that the media door is closed at all times during RFID programming.
	The printer is using outdated printer firmware and reader firmware versions.	Go to zebra.com/firmware for updated firmware.
RFID parameters do not appear in Setup mode, and RFID information does not appear on the printer configuration label. The printer does not void RFID labels that are not programmed correctly.	The printer was powered off (**O**) and then back on (**I**) too quickly for the RFID reader to initialize properly.	Wait at least 10 seconds after turning the printer power off before turning it back on. **1.** Turn off (**O**) the printer. **2.** Wait 10 seconds. **3.** Turn on (**I**) the printer. **4.** Check for the RFID parameters in Setup mode or for RFID information on a new configuration label.
	An incorrect version of printer firmware was loaded on the printer.	**1.** Verify that the correct firmware version is loaded on your printer. For more information, refer to RFID Programming Guide 3. **2.** Download the correct printer firmware if necessary. **3.** If the problem persists, contact Technical Support.

Issue	Possible Cause	Recommended Solution
	The printer is unable to communicate with the RFID subsystem.	**1.** Turn off (**O**) the printer. **2.** Wait 10 seconds. **3.** Turn on (**I**) the printer. **4.** If the problem persists, you may have a bad RFID reader or a loose connection between the RFID reader and the printer. Contact Technical Support or an authorized service technician for assistance.
The DATA light flashes indefinitely after you attempt to download printer or reader firmware.	The download was not successful. For optimal results, cycle power on the printer before downloading any firmware.	**1.** Turn off (**O**) the printer. **2.** Wait 10 seconds. **3.** Turn on (**I**) the printer. **4.** Attempt to download the firmware again. **5.** If the problem persists, contact Technical Support.

Miscellaneous Issues

Issue	Possible Cause	Recommended Solution
The printer is prompting for a front panel password/PIN, but one was not set.	The front panel display can be locked, limiting access to the control panel parameters until the front panel password is entered. This value is initially undefined and must be set before it can be used.	For more information about the front panel password, refer to the Zebra Link-OS PrintSecure Printer Administration Guide.
Issues with the Display		
The control panel display shows a language that I cannot read	The language parameter was changed through the control panel or a firmware command.	**1.** On the Home screen, touch **Menu** (the icon on the bottom-left). **2.** Touch the top selection on the screen. **3.** Scroll through the language selections under this menu option. The selections for this parameter are displayed in the actual languages to make it easier for you to find one that you are able to read. **4.** Touch the language that you want to display to select it. **5.** Touch the **Home** icon to return to the Home screen.
The display is missing characters or parts of characters	The display may need replacing.	Call a service technician.
The USB Host Port Is Not Acknowledging a USB Device		
The printer is not acknowledging a USB device or is not reading the files on a USB device that is plugged into the USB host port.	The printer currently supports USB drives only up to 1 TB in size.	Use a USB drive that is 1 TB or smaller.
	The USB device may require its own external power.	If your USB device requires external power, make sure that it is plugged into a working power supply.
Printer Parameters Are Not Set As Expected		

Issue	Possible Cause	Recommended Solution
Changes in parameter settings did not take effect. OR Some parameters changed unexpectedly.	A firmware setting or command prevented the ability to change the parameter.	Check your label formats or the settings of the software that you use to send formats to the printer. If necessary, refer to the Programming Guide for ZPL, ZBI, Set-Get-Do, Mirror, and WML or call a service technician. A copy of the manual is available at zebra.com/manuals.
	A command in a label format changed the parameter back to the previous setting.	
Calibration Issues		
Auto Calibrate failed.	The media or ribbon is loaded incorrectly.	Ensure that the media and ribbon are loaded correctly. See Loading the Ribbon on page 58 and Loading the Media on page 39.
	The sensors could not detect the media or ribbon.	Calibrate the printer. See Calibrating the Ribbon and Media Sensors on page 116.
	The sensors are dirty or positioned improperly.	Ensure that the sensors are clean and properly positioned.
	The media type is set incorrectly.	Set the printer for the correct media type (gap/notch, continuous, or mark).
Non-continuous labels are being treated as continuous labels.	The printer was not calibrated for the media being used.	Calibrate the printer. See Calibrating the Ribbon and Media Sensors on page 116.
	The printer is configured for continuous media.	Set the printer for the correct media type (gap/notch, continuous, or mark).
Printer Locks Up		
All indicator lights are on, nothing is on the display, and the printer locks up.	Internal electronic or firmware failure.	Power cycle the printer. If the problem persists, call a service technician.
The printer locks up while booting up.	Main logic board failure.	

Servicing the Printer

If you have a problem using the printer, contact your facility's technical or systems support. If there is a problem with the printer, they will contact the Zebra Global Customer Support Center at zebra.com/support.

Gather the following information before contacting Zebra Global Customer Support:

- Serial number of the unit
- Model number or product name
- Firmware version number

Zebra responds to calls by e-mail, telephone, or fax within the time limits set forth in service agreements. If your problem cannot be solved by Zebra Global Customer Support, you may need to return your equipment for servicing and will be given specific directions.

If you purchased your product from a Zebra business partner, please contact that business partner for support.

Shipping the Printer

If you must ship the printer:

1. Turn off (**O**) the printer, and disconnect all cables.
2. Remove any media, ribbon, or loose objects from the printer interior.
3. Close the printhead.
4. Carefully pack the printer into the original container or a suitable alternate container to avoid damage during transit.

   A shipping container can be purchased from Zebra if the original packaging has been lost or destroyed.

IMPORTANT: Zebra is not responsible for any damages incurred during shipment if an approved shipping container is not used. Shipping the units improperly can possibly void the warranty.

Using a USB Host Port and the Print Touch Feature

The exercises presented here will help you learn how to use the optional USB host port and the printer's Print Touch feature with an Android™-based NFC-enabled device (such as a smartphone or a tablet).

Some SGD commands are listed as part of these exercises for advanced users.

Items Required for the Exercises

To perform the exercises in this document, you will need:

- a USB Flash drive that is up to 1 Terabyte (1 TB)

NOTE: The printer will not recognize drives larger than 1 TB.

- a USB keyboard.
- the various files listed in Files for Completing the Exercises.
- the free Zebra Utilities app for your smartphone (search for Zebra Technologies in the Google Play store).

Files for Completing the Exercises

Most of the files you need to complete the exercises in these section are available on zebra.com in the form of a .ZIP file located here. Copy these files to your computer before you begin the exercises. Where possible, the contents of the files are shown. Contents of files that include coded content—which cannot be viewed either as text or as an image—are not included.

File 1: ZEBRA.BMP

File 2: SAMPLELABEL.TXT

This simple label format prints the Zebra logo and a line of text at the end of the mirroring exercise.

```
^XA
^FO100,75^XGE:zebra.bmp^FS
^FO100,475^A0N,50,50^FDMirror from USB Completed^FS
^XZ
```

File 3: LOGO.ZPL

File 4: USBSTOREDFILE.ZPL

This label format prints an image and text. This file will be stored on the USB memory device at the root level so that it can be printed.

```
CT~~CD,~CC^~CT~
^XA~TA012~JSN^LT0^LH0,0^JMA^PR4,4~SD15^LRN^CI0^XZ
~DG000.GRF,07680,024,,[image data]
^XA
^LS0
^SL0
^BY3,3,91^FT35,250^BCN,,Y,N^FC%,{,#^FD%d/%m/%Y^FS
^FT608,325^XG000.GRF,1,1^FS
^FT26,75^A0N,28,28^FH\^FDThis label was printed from a format stored^FS
^FT26,125^A0N,28,28^FH\^FDon a USB Flash Memory drive. ^FS
^BY3,3,90^FT33,425^BCN,,Y,N
^FD>:Zebra Technologies^FS
^PQ1,0,1,Y^XZ
^XA^ID000.GRF^FS^XZ
```

File 5: VLS_BONKGRF.ZPL

This file is included in the .ZIP file located here.

File 6: VLS_EIFFEL.ZPL

This file is included in the .ZIP file located here.

File 7: `KEYBOARDINPUT.ZPL`

This label format, used for the USB keyboard input exercise, does the following:

- creates a barcode with the current date, based on your Real-Time Clock (RTC) setting
- prints the Zebra logo graphic
- prints fixed text
- `^FN` prompts you to enter your name, and the printer prints what you entered

```
^XA
^CI28
^BY2,3,91^FT38,184^BCN,,Y,N^FC%,{,#^FD%d/%m/%Y^FS
^FO385,75^XGE:zebra.bmp^FS
^FT40,70^A0N,28,28^FH\^FDThis label was printed using a keyboard input. ^FS
^FT35,260^A0N,28,28^FH\^FDThis label was printed by:^FS
^FT33,319^A0N,28,28^FN1"Enter Name"^FS
^XZ
```

File 8: `SMARTDEVINPUT.ZPL`

This is the same label format as the previous label, only with different text printing. This format is used for the smart device input exercise.

```
^XA
^CI28
^BY2,3,91^FT38,184^BCN,,Y,N^FC%,{,#^FD%d/%m/%Y^FS
^FO385,75^XGE:zebra.bmp^FS
^FT40,70^A0N,28,28^FH\^FDThis label was printed using a smart device input.
 ^FS
^FT35,260^A0N,28,28^FH\^FDThis label was printed by:^FS
^FT33,319^A0N,28,28^FN1"Enter Name"^FS
^XZ
```

File 9: Firmware File

You may want to download a firmware file for your printer and copy it to your computer for use during the exercises. You may omit doing this if you wish.

You can download the latest firmware file from zebra.com/firmware.

USB Host

Your printer may be equipped with one or two USB host ports on the front panel. A USB host port allows you to connect USB devices—such as a keyboard, scanner, or USB Flash drive—to the printer. The exercises in this section will teach you how to perform USB mirror, how to transfer files to and from the printer, and how to provide information for which you are prompted and then print a label using that information.

IMPORTANT: When using a USB host port, files should be named only with 1 to 16 alphanumeric characters (A, a, B, b, C, c, ..., 0, 1, 2, 3, ...). Do not use Asian characters, Cyrillic characters, or accented characters in file names.

NOTE: Some functions may not work properly if there are underscores in a file name. Use periods instead.

Exercise 1: Copy Files to a USB Flash Drive and Perform USB Mirror

NOTE: For printers purchased in the EMEA region after August 1, 2025, mirroring (`usb.mirror.enable`) is disabled by default. You must enable it before you can complete this exercise. For more information, refer to the Zebra Link-OS PrintSecure Printer Administration Guide.

1. On your USB Flash Drive, create the following:

   - a folder called `Zebra`
   - in that folder, three subfolders:
     - `appl`
     - `commands`
     - `files`
2. In the `/appl` folder, place a copy of the latest firmware for your printer.
3. In the `/files` folder, place the following file:

   File 1: ZEBRA.BMP on page 173
4. In the `/commands` folder, place the following files:
   - File 2: SAMPLELABEL.TXT on page 173
   - File 3: LOGO.ZPL on page 173
5. Insert the USB Flash drive into a USB host port on the front of your printer.

6. Observe the control panel and wait.

   The following should happen:

   - If the firmware on the USB Flash drive is different than what is on the printer, the firmware downloads to the printer. The printer then restarts and prints a printer configuration label. (If there is no firmware on the USB Flash drive or if the firmware version is the same, the printer skips this action.)
   - The printer downloads the files in the `/files` folder and briefly shows the names of the files that are downloading on the display.
   - The printer executes any files in the `/commands` folder.
   - The printer restarts and then displays this message: `MIRROR PROCESSING FINISHED`

7. Remove the USB Flash drive from the printer.

Advance User Information	
See the Zebra Programming Guide for more information about these commands.	
To enable/disable mirroring:	`! U1 setvar "usb.mirror.enable" "value"` Values: `"on"` or `"off"`
To enable/disable automatic mirroring that occurs when a USB Flash drive is inserted into the USB host port:	`! U1 setvar "usb.mirror.auto" "value"` Values: `"on"` or `"off"`
To specify the number of times that the mirror operation will be repeated if it fails:	`! U1 setvar "usb.mirror.error_retry" "value"` Values: `0` to `65535`
To change the path to the location on the USB device from which mirror files are retrieved:	`! U1 setvar "usb.mirror.appl_path" "new_path"` Default: `"zebra/appl"`
To change the path to the location on the printer from which mirror files are retrieved:	`! U1 setvar "usb.host.lock_out" "value"` Default: `"zebra"`
To enable/disable the ability to use the USB port:	`! U1 setvar "usb.host.lock_out" "value"` Values: `"on"` or `"off"`

Exercise 2: Print a Label Format from a USB Flash Drive

The Print USB File option allows you to print files from a USB mass storage device, such as a USB Flash drive. Only printable files (`.ZPL` and `.XML`) may be printed from the USB mass storage device, and the files must be located at the root level, not in a directory.

1. Copy the following files to your USB Flash drive:
   - `File 4: USBSTOREDFILE.ZPL` `on page 173`
   - `File 5: VLS_BONKGRF.ZPL` `on page 173`
   - `File 6: VLS_EIFFEL.ZPL` `on page 173`
2. Insert the USB Flash drive into a USB host port on the front of your printer.
3. Tap **Menu** > **Storage** > **USB** > **Print: From USB**.

   The printer loads any executable files and processes them. The available files are listed. **SELECT ALL** is available to print all files on the USB Flash drive.

4. Select `USBSTOREDFILE.zpl`.
5. Touch the checkmark to copy the files.

   The label prints.

Exercise 3: Copy Files to/from a USB Flash Drive

The Copy USB File option allows you to copy files from a USB mass storage device to the printer's Flash memory E: drive.

1. Copy the following files to the root directory of your USB Flash drive.
   - `File 7: KEYBOARDINPUT.ZPL` on page 174
   - `File 8: SMARTDEVINPUT.ZPL` on page 174

NOTE: Do not put these files into a subfolder.

2. Insert the USB Flash drive into a USB host port on the front of your printer.
3. Tap **Menu** > **Storage** > **USB** > **Copy: Files to Printer**.

The printer loads any executable files and processes them. The available files are listed. (If desired, you can use **Select All** to copy all the available files from the USB Flash drive.)

4. Select the files `STOREFMT.ZPL`. and `STOREFMTM1.ZPL`.
5. Touch the checkmark to copy the files.

   The printer stores the files in `E:` memory.
6. Remove the USB Flash drive from the USB host port.

You can now copy these files from the printer to a USB Flash drive by tapping **Menu** > **Storage** > **USB** > **Copy: Files to USB**.

The option **SELECT ALL** is available to store all the available files from the printer to the USB Flash drive. Any `.ZPL` file that is copied will be post-processed so that the contents of the file will be suitable to be sent to a printer for normal execution.

Exercise 4: Enter Data for a Stored File with a USB Keyboard and Print a Label

The Print Station feature allows you to use a USB Human Interface Device (HID), such as a keyboard or a barcode scanner, to enter `^FN` field data into a `*.ZPL` template file.

1. After performing Exercise 3: Copy Files to/from a USB Flash Drive on page 178, plug a USB keyboard into a USB host port.
2. Tap **Menu** > **Print** > **Print Station**.

   The printer loads any executable files and processes them. The available files are listed.

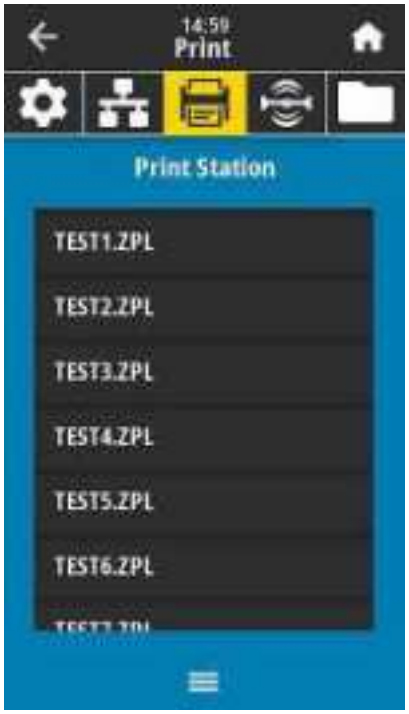

3. Select the file `KEYBOARDINPUT.ZPL`.

   The printer accesses the file and prompts you for the information in the `^FN` fields in the file. In this case, it prompts you for your name.
4. Type your name on the keyboard, and then press **<ENTER>**.

   The printer prompts for the number of labels to print.
5. Specify the desired quantity of labels, then press **<ENTER>** again.

   The specified number of labels is printed, with your name in the appropriate fields.

Print Touch/Near Field Communication (NFC)

The Zebra Print Touch feature allows you to touch an Android™-based, NFC-enabled device (such as a smart phone or tablet) to the printer's NFC logo to pair the device to the printer. This capability allows you to use your device to provide information for which you are prompted and then print a label using that information.

IMPORTANT: Some devices may not support NFC communication with the printer until you alter their settings. If you encounter difficulties, consult your service provider or your smart device manufacturer for more information.

Figure 18 NFC Logo Location

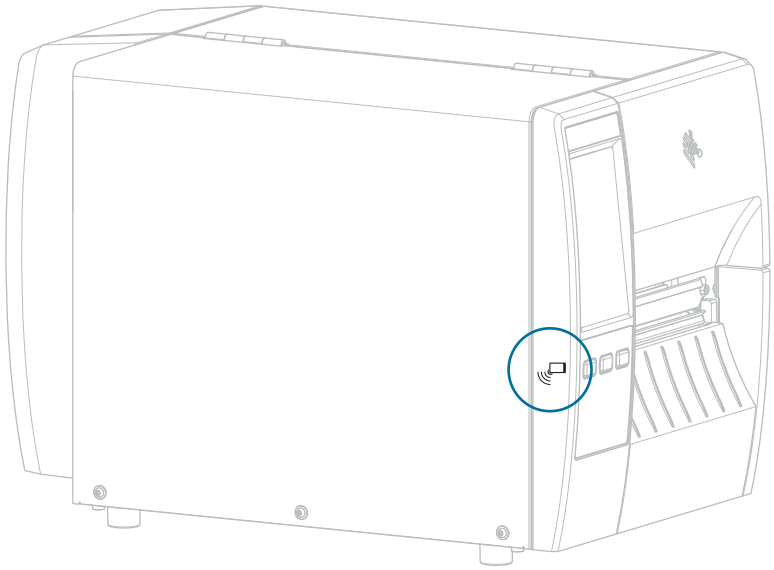

Exercise 5: Enter Data for a Stored File with a Device and Print a Label

The steps in this exercise may vary somewhat based on:

- your device (phone or tablet)
- your service provider
- whether you already have the free Zebra Utilities app installed on your device

Refer to the Zebra Bluetooth User Guide for specific instructions for configuring your printer to use a Bluetooth interface. A copy of this manual is available at zebra.com/manuals.

1. Copy the `SMARTDEVINPUT.ZPL` file to your device.
2. If you do not have the Zebra Utilities app installed on your device, go to the app store for your device, search for the Zebra Setup Utilities app, and install it.
3. If your phone supports NFC, pair your device with the printer by holding the device next to the NFC icon on the printer. Otherwise, pair using the Bluetooth settings on your device.
   a) If necessary, access the Bluetooth information about your printer using your device. For instructions, refer to the manufacturer's documentation for your device.
   b) If necessary, select the Zebra printer's serial number to pair it with the device.
   c) After your device has been detected by the printer, the printer may prompt you to accept or reject the pairing. If necessary, tap **ACCEPT**. Some devices will pair with the printer without this prompt.

   The printer and your device are paired.
4. Start the Zebra Utilities app on your device.

   The Zebra Utilities main menu displays.
5. Tap **Available Files**.

   The smart device gets data from the printer and displays it.

NOTE: This retrieval process may take a minute or more to complete.

6. Scroll through the formats shown and select `SMARTDEVINPUT.ZPL`.

   Based on the `^FN` field in the label format, the device prompts you for your name.
7. Enter your name at the prompt.
8. Change the quantity of labels to print, if desired.
9. Tap **Send to Printer** to print the label.

Specifications

This section lists general printer specifications, printing specifications, ribbon specifications, and media specifications.

General Specifications

Height	Standard	279 mm (11.0 in.)
	With Liner Take-Up option	324 mm (12.75 in.)
Width		241 mm (9.5 in.)
Length*		432 mm (17 in.)
Weight*		9.1 kg (20 lb)
Temperature	Operating	Thermal Transfer: 5° to 40°C (40° to 105°F) Direct Thermal: 0° to 40°C (32° to 105°F)
	Storage	–40° to 60°C (–40° to 140°F)
Relative Humidity	Operating	20% to 85%, non-condensing
	Storage	5% to 85%, non-condensing
Memory		256 MB SDRAM memory (32 MB user-available) 256 MB on-board linear Flash memory (64 MB user available)
Additional features		• 109 mm (4.3 in.) color touch user interface • Real-Time Clock (RTC) • RFID option • Applicator interface option

* Base model with media cover closed. Dimensions and weight may vary depending on added options.

Power Specifications

The following are typical values. Actual values vary from unit to unit and are affected by such things as the options installed and the printer settings.

Electrical	100–240 VAC, 50-60 Hz
Power consumption—120 VAC, 60 Hz	
Inrush Current	< 35A peak 8A RMS (half cycle)
Energy Star Off Power (W)	0.10
Energy Star Sleep Power (W)	4.68
Print Power* (W)	53
Print Power* (VA)	100
Power consumption—230 VAC, 50 Hz	
Inrush Current	< 80A peak 12A RMS (half cycle)
Energy Star Off Power (W)	0.26
Energy Star Sleep Power (W)	4.60
Print Power* (W)	57
Print Power* (VA)	99

* Printing Pause self-test labels at 6 ips with 4x6-in. or 6.5x4 in. labels, darkness 10, and direct thermal media.

Power Cord Specifications

Depending on how your printer was ordered, a power cord may or may not be included. If one is not included, or if the one that is included is not suitable for your requirements, consider the following information.

CAUTION—PRODUCT DAMAGE: For personnel and equipment safety, always use an approved three-conductor power cord specific to the region or country intended for installation. This cord must use an IEC 320 female connector and the appropriate region-specific, three-conductor grounded plug configuration.

Figure 19 Power Cord Specifications

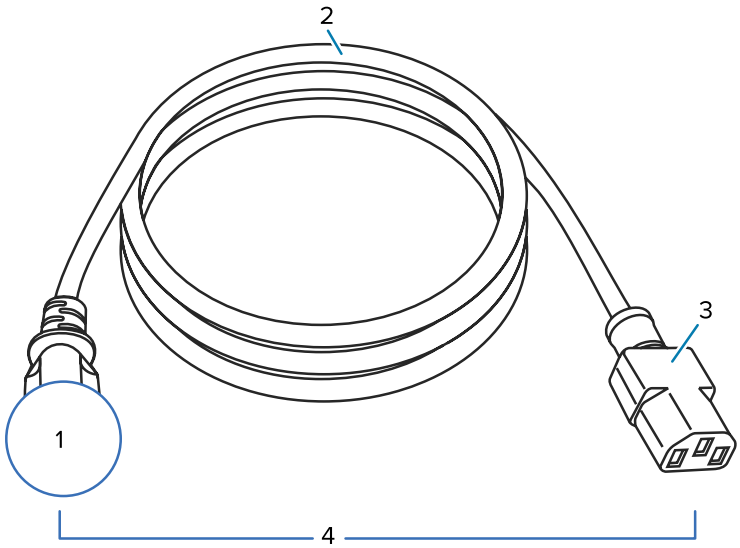

1	AC power plug for your country—This should bear the certification mark of at least one of the known international safety organizations (see Figure 20 International Safety Organization Certification Symbols on page 186). The chassis ground (earth) must be connected to ensure safety and reduce electromagnetic interference.
2	3-conductor HAR cable or other cable approved for your country.
3	IEC 320 connector—This should bear the certification mark of at least one of the known international safety organizations (see Figure 20 International Safety Organization Certification Symbols on page 186).
4	Length ≤ 3 m (9.8 ft). Rating 10 Amp, 250 VAC.

Figure 20 International Safety Organization Certification Symbols

Communication Interface Specifications

This section describes standard and optional specifications.

Figure 21 Location of Communication Interfaces

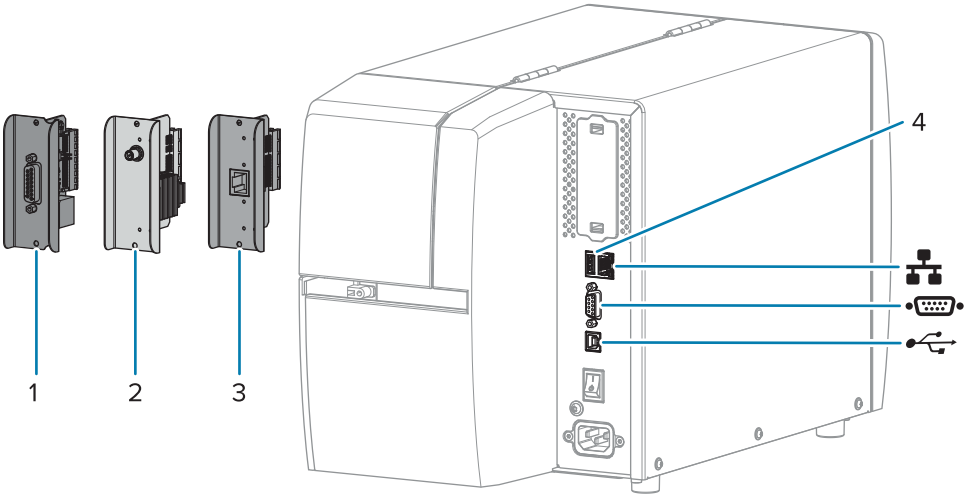

1	Applicator port option
2	Wireless port option
3	Wired Ethernet print server (external)
4	USB host port
	Wired Ethernet print server (internal)
	Serial port
	USB 2.0 data interface

NOTE: You must supply all data cables for your application. The use of cable strain relief clamps is recommended.

Ethernet cables do not require shielding, but all other data cables must be fully shielded and fitted with metal or metalized connector shells. Unshielded data cables may increase radiated emissions above the regulated limits.

To minimize electrical noise pickup in the cable:

- Keep data cables as short as possible.
- Do not bundle the data cables tightly with the power cords.
- Do not tie the data cables to power wire conduits.

Standard Connections

This printer supports a variety of standard connections.

USB 2.0 Data Interface

Limitations and requirements	A maximum cable length of 5m (16.4 ft).
Connections and configuration	No additional configuration is necessary.

RS-232/C Serial Data Interface

Specifications	• 2400 to 115000 baud • parity, bits/character • 7 or 8 data bit • XON-XOFF, RTS/CTS, or DTR/DSR handshake protocol required • 750mA at 5 V from pins 1 and 9
Limitations and requirements	• You must use a null-modem cable to connect to the printer or a null-modem adapter if using a standard modem cable. • Maximum cable length of 15.24 m (50 ft). • You may need to change printer parameters to match the host computer.
Connections and configuration	The baud rate, number of data and stop bits, the parity, and the XON/XOFF or DTR control must match those of the host computer.

Wired 10/100 Ethernet Print Server (Internal)

This standard ZebraNet Ethernet option stores network configuration information in the printer. An optional Ethernet connection stores configuration information on a removable print server board, which can be shared between printers.

Limitations and requirements	• The printer must be configured to use your LAN. • A second wired print server can be installed in the bottom option slot.
Connections and configuration	Refer to the ZebraNet Wired and Wireless Print Servers User Guide for configuration instructions. This manual is available at zebra.com/manuals.

Bluetooth Low Energy (BTLE)

Limitations and requirements	Many mobile devices can communicate with the printer within a 9.1-m (30-ft) radius of the printer.

Connections and configuration	Refer to the Zebra Bluetooth User Guide for specific instructions for configuring your printer to use a Bluetooth interface. This manual is available at zebra.com/manuals.

USB Host Port

Limitations and requirements	You can plug only one device into the USB host port. You cannot use a second device by plugging it into a USB port on another device, nor can you use an adapter to split a USB host port on the printer to accept more than one device at a time.
Connections and configuration	No additional configuration is necessary.

Optional Connections

This printer supports the following connectivity options.

Wireless Print Server

Specifications	See Wireless Specifications for details.
Limitations and requirements	• Can print to the printer from any computer on your Wireless Local Area Network (WLAN). • Can communicate with the printer through the printer's web pages. • The printer must be configured to use your WLAN. • Can be installed only in the top option slot.
Connections and configuration	Refer to the ZebraNet Wired and Wireless Print Servers User Guide for configuration instructions. A copy of this manual is available at zebra.com/manuals.

Applicator Interface

Requirements	Must have a DB15F connector.

Wired 10/100 Ethernet Print Server (External)

This ZebraNet Ethernet option allows you to program network configuration information to the print server, which can be shared between printers. The standard Ethernet connection stores configuration information on the printer itself.

Requirements	Must have the parallel data interface option.

Wireless Specifications

NOTE: For printers purchased in the EMEA region after August 1, 2025, WLAN is disabled by default. To enable the WLAN option, refer to the Zebra Link-OS PrintSecure Printer Administration Guide.

Antenna Information

- Type = trace antenna gain –3.7dBi
- Type = Omni directional antenna gain 3dBi @ 2.4GHz; 5dBi @ 5GHz
- Type = PCBA antenna gain = –30dBi @ 900MHz

Wireless, Bluetooth, and RFID Specifications

802.11 b • 2.4 GHz • DSSS (DBPSK, DQPSK, and CCK) • RF power 17.77 dBm (EIRP)	802.11 a/n • 5.15-5.25 GHz, 5.25-5.35 GHz, 5.47-5.725 GHz • OFDM (16-QAM and 64-QAM with BPSK and QPSK) • RF power 17.89 dBm (EIRP)
802.11 g • 2.4 GHz • OFDM (16-QAM and 64-QAM with BPSK, and QPSK) • RF power 18.61 dBm (EIRP)	802.11 ac • 5.15-5.25 GHz, 5.25-5.35 GHz, 5.47-5.725 GHz • OFDM (16-QAM and 64-QAM with BPSK and QPSK) • RF power 13.39 dBm (EIRP)
802.11 n • 2.4 GHz • OFDM (16-QAM and 64-QAM with BPSK, and QPSK) • RF power 18.62 dBm (EIRP)	Bluetooth Low Energy (LE) • 2.4 GHz • GFSK (Bluetooth Low Energy) • RF power 2.1 dBm
RFID RE40 Radio Module • 865-928 MHz • FHSS • RF power 27.22 dBm	

Print Specifications

Print resolution		203 dpi (dots per inch) (8 dots/mm)
		300 dpi (12 dots/mm)
Programmable constant print speeds (per second)	203 dpi	51 mm to 305 mm in 25.4-mm increments 2.0 in. to 12 in. in 1-in. increments
	300 dpi	51 mm to 203 mm in 25.4-mm increments 2.0 in. to 8 in. in 1-in. increments
Dot size (nominal) (width x length)	203 dpi	0.125 mm x 0.125 mm (0.0049 in. x 0.0049 in.)
	300 dpi	0.084 mm x 0.099 mm (0.0033 in. x 0.0039 in.)
Maximum print width		104 mm (4.09 in.)
Maximum continuous print length*	203 dpi	3988 mm (157 in.)
	300 dpi	1854 mm (73 in.)
Barcode modulus (X) dimension	203 dpi	5 mil to 50 mil
	300 dpi	3.3 mill to 33 mil
First dot location (measured from the inside edge of the media)		2.5 mm ± 1.016 mm (0.10 in. ± 0.04 in.)
Media registration tolerance**	Vertical	± 1 mm (± 0.039 in.) on non-continuous media
	Horizontal	± 1 mm (± 0.039 in.) within a roll of media

* Maximum label lengths are affected by option selections and firmware overhead.

** Media registration and minimum label length are affected by media type and width, ribbon type, and print speed. Performance improves as these factors are optimized. Zebra recommends always qualifying any application with thorough testing.

Media Specifications

Label length*	Minimum* (Tear-Off)	17.8 mm (0.7 in.)
	Minimum* (Peel-Off)	12.7 mm (0.5 in)
	Minimum* (Cutter)	25.4 mm (1.0 in.)
	Minimum* (RFID)	Varies for each transponder type
	Maximum** (most options)	991 mm (39 in.)
	Maximum (Cutter catch tray)	152 mm (6 in.)
Media width (label and liner)	Minimum (non-RFID)	19 mm (0.75 in.)
	Minimum (RFID)	Varies for each transponder type
	Maximum	114 mm (4.5 in.)
Total thickness (includes liner, if any)	Minimum	0.076 mm (0.003 in.)
	Maximum	0.25 mm (0.010 in.)
Maximum roll outside diameter	76 mm (3-in.) core	203 mm (8 in.)
	25 mm (1-in.) core	152 mm (6 in.)
Inter-label gap	Minimum	2 mm (0.079 in.)
	Preferred	3 mm (0.118 in.)
	Maximum	4 mm (0.157 in.)
Ticket/tag notch size (width x length)		6 mm x 3 mm (0.25 in. x 0.12 in.)
Hole diameter		3.18 mm (0.125 in.)
Notch or hole position (centered from inner media edge)	Minimum	3.8 mm (0.15 in.)
	Maximum	57 mm (2.25 in.)
Density, in Optical Density Units (ODU) (black mark)		> 1.0 ODU
Maximum media density		≤ 0.5 ODU
Transmissive media sensor		11 mm (7/16 in.) from the inside edge
Black mark length		2.5 to 11.5 mm (0.098 to 0.453 in.)
Black mark width		≥ 9.5 mm (≥ 0.37 in.)
Black mark location (within inside media edge)		1 mm (0.04 in.)
Black mark density		> 1.0 Optical Density Units (ODU)
Maximum media density		0.3 ODU

* Media registration and minimum label length are affected by media type and width, ribbon type, and print speed. Performance improves as these factors are optimized. Zebra recommends always qualifying any application with thorough testing.

** Maximum label lengths are affected by option selections and firmware overhead.

Ribbon Specifications

The Thermal Transfer option requires ribbon, which must be coated on the outside. For more information, see Ribbon on page 14.

Ribbon width*	Minimum	40 mm (1.57 in.)
	Maximum	110 mm (4.33 in.)
Maximum ribbon length		450 m (1476 ft)
Maximum ribbon roll size		81.3 mm (3.2 in.)
Ribbon core inside diameter		25 mm (1 in.)

* Zebra recommends using ribbon that is at least as wide as the media to protect the printhead from wear.

Glossary

A list of terms used in this guide are defined here.

alphanumeric

Indicating letters, numerals, and characters such as punctuation marks.

backfeed

When the printer pulls the media and ribbon (if used) backward into the printer so that the beginning of the label to be printed is properly positioned behind the printhead. Backfeed occurs when operating the printer in Tear-Off and Applicator modes.

barcode

A code by which alphanumeric characters can be represented by a series of adjacent stripes of different widths. Many different code schemes exist, such as the universal product code (UPC) or Code 39.

black mark media

Media with registration marks found on the underside of the print media that act as start-of-label indications for the printer. The reflective media sensor is the generally-selected option for use with black mark media.

Contrast this with continuous media on page 195 or gap/notch media on page 197.

calibration (of a printer)

collection method

Select a media collection method that is compatible with your printer options. Selections include tear-off, peel-off, cutter, and rewind. The basic media and ribbon loading instructions are the same for all collection methods with some additional steps necessary for using any media collection options.

configuration

The printer configuration is a group of operating parameters specific to the printer application. Some parameters are user selectable, while others are dependent on the installed options and mode of operation. Parameters may be switch selectable, control panel programmable, or downloaded as ZPL II commands. A configuration label listing all the current printer parameters may be printed for reference.

continuous media

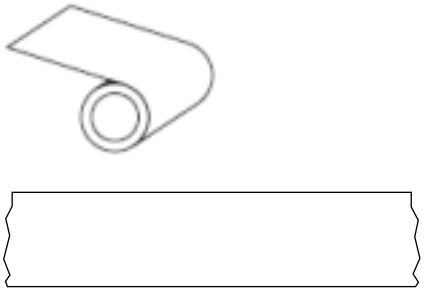

A transmissive (gap) sensor is typically used for the printer to detect when the media runs out.

Contrast this with black mark media on page 194 or gap/notch media on page 197.

core diameter

The inside diameter of the cardboard core at the center of a roll of media or ribbon.

diagnostics

Information about which printer functions are not working that is used for troubleshooting printer problems.

die-cut media

A type of label stock that has individual labels stuck to a media liner. The labels may be lined up against each other or separated by a small distance. Typically the material surrounding the labels has been removed. (See non-continuous media on page 199.)

direct thermal

A printing method in which the printhead presses directly against the media. Heating the printhead elements causes a discoloration of the heat-sensitive coating on the media. By selectively heating the printhead elements as the media moves past, an image is printed onto the media. No ribbon is used with this printing method.

Contrast this with thermal transfer on page 202.

direct thermal media

Media that is coated with a substance that reacts to the application of direct heat from the printhead to produce an image.

fanfold media

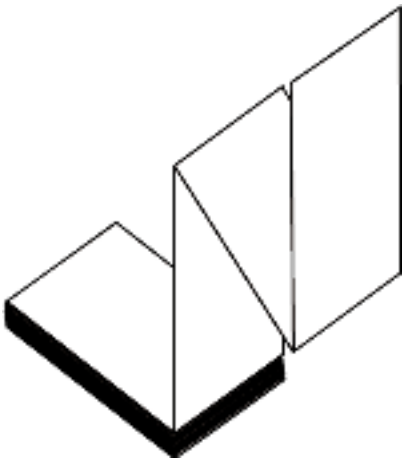

Non-continuous media that comes folded in a rectangular stack and folded in a zigzag pattern. Fanfold media is either gap-notch media or black mark media, meaning it uses black marks or notches to track media format positioning.

Fanfold media can have the same label separations as non-continuous roll media. The separations fall either on or near the folds.

Contrast this with roll media on page 201.

firmware

This is the term used to specify the printer's operating program. This program is downloaded to the printer from a host computer and stored in flash memory. Each time the printer power is turned on, this operating program starts. This program controls when to feed the media forward or backward and when to print a dot on the label stock.

FLASH memory

Non-volatile memory that maintains the stored information intact when power is off. This memory area is used to store the printer's operating program. Can also be used to store optional printer fonts, graphic formats, and complete label formats.

font

A complete set of alphanumeric characters in one style of type. Examples include CG Times™, CG Triumvirate Bold Condensed™.

gap/notch media

Media that contains a separation, notch, or hole, indicating where one label/printed format ends and the next begins.

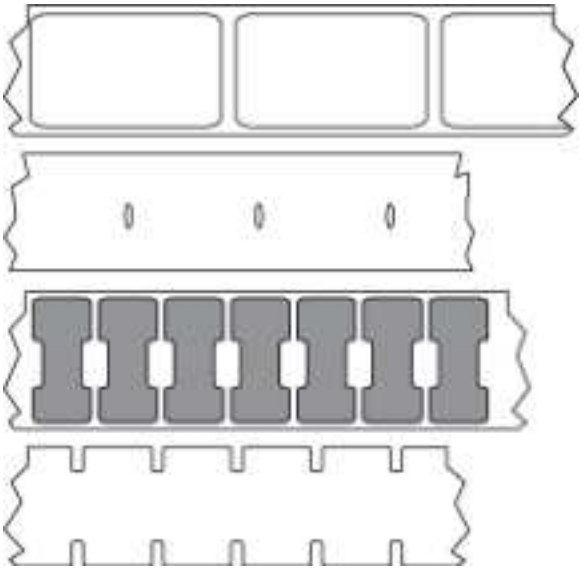

Contrast this with black mark media on page 194 or continuous media on page 195.

ips (inches-per-second)

The speed at which the label or tag is printed. Many Zebra printers can print from 1 ips to 14 ips.

label

An adhesive-backed piece of paper, plastic, or other material on which information is printed. A non-continuous label has a defined length, as opposed to a continuous label or a receipt which can have a varying length.

label backing (liner)

The material on which labels are affixed during manufacture and which is discarded or recycled.

label type

The printer recognizes the following label types.

Continuous

Gap/Notch

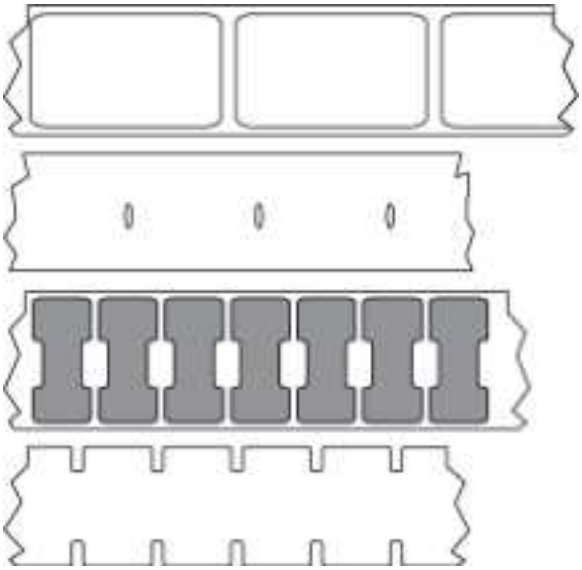

Mark

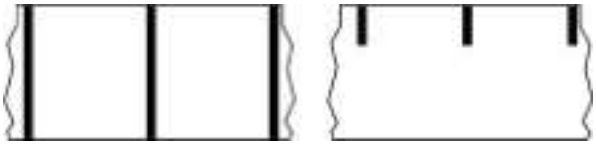

LCD (liquid crystal display)

A backlit display that provides the user with either operating status during normal operation or option menus when configuring the printer to a specific application.

LED (light emitting diode)

Indicators of specific printer status conditions. Each LED is either off, on, or blinking depending on the feature being monitored.

linerless media

Linerless media does not use backing to keep the layers of labels on a roll from sticking to one another. It is wound like a roll of tape, with the sticky side of one layer in contact with the non-sticky surface of the one below it.

Depending on the printer, individual labels may be separated by perforations, or they can be cut apart with a linerless cutter. Because there is no liner, more labels can potentially fit on a roll, cutting down the need to change media as often.

Linerless media is considered an environmentally friendly option because no backing is wasted, and the cost per label can be less than that of standard labels.

Zebra recommends using Zebra ZeroLiner direct thermal linerless media.

mark media

See black mark media on page 194.

media

Material onto which data is printed by the printer. Types of media include: tag stock, die-cut labels, continuous labels (with and without media liner), non-continuous media, fanfold media, and roll media.

media sensor

This sensor is located behind the printhead to detect the presence of media and, for non-continuous media, the position of the web, hole, or notch used to indicate the start of each label.

media supply hangar

The stationary arm that supports the media roll.

non-continuous media

Media that contains an indication of where one label/printed format ends and the next one begins. Types of non-continuous media include gap-notch media and black mark media. (Contrast this with continuous media.)

Non-continuous roll media usually comes in the form of labels with an adhesive backing on a liner. Tags (or tickets) are separated by perforations.

Individual labels or tags are tracked and position-controlled using one of these methods:

- Web media separates labels by gaps, holes, or notches.

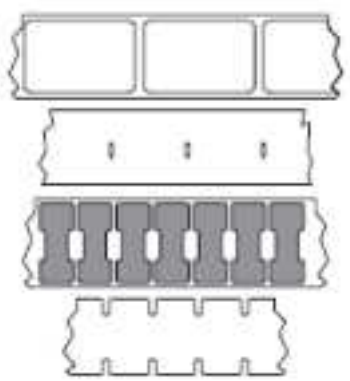

- Black mark media uses pre-printed black marks on the back side of the media to indicate label separations.

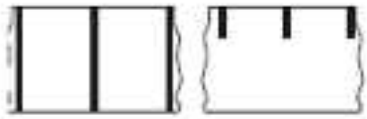

- Perforated media has holes—to allow the labels or tags to be separated from each other easily—along with position-control marks, notches, or label gaps.

non-volatile memory

Electronic memory that retains data even when the power to the printer is turned off.

notched media

A type of tag stock containing a cutout area that can be sensed as a start-of-label indicator by the printer. This is typically a heavier, cardboard-like material that is either cut or torn away from the next tag. See gap/notch media on page 197.

peel-off mode

A mode of operation in which the printer peels a printed label away from the backing and allows the user to remove it before another label is printed. Printing pauses until the label is removed.

perforated media

Media with perforations that allow the labels or tags to be separated from each other easily. The media may also have black marks or other separations between labels or tags.

print speed

The speed at which printing occurs. For thermal transfer printers, this speed is expressed in terms of inches per second (ips).

print type

The print type specifies whether the type of media being used requires ribbon to print. Thermal transfer media requires ribbon while direct thermal media does not.

printhead wear

Radio frequency identification (RFID) "smart" media

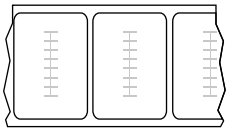

Each RFID label has an RFID transponder (sometimes called an "inlay"), made of a chip and an antenna, embedded between the label and the liner. The shape of the transponder varies by manufacturer and is visible through the label. All "smart" labels have memory that can be read, and many have memory that can be encoded.

RFID media can be used in a printer that is equipped with an RFID reader/encoder. RFID labels are made from the same materials and adhesives as non-RFID labels.

receipt

A receipt is a variable length printout. One example of a receipt is in retail stores, where each purchased item occupies a separate line on the printout. Therefore, the more items purchased, the longer the receipt.

registration

Alignment of printing with respect to the top (vertical) or sides (horizontal) of a label or tag.

ribbon

Ribbon is a thin film that is coated on one side with wax, resin, or wax resin (usually called ink), which is transferred to the media during the thermal transfer process. Ink is transferred onto the media when heated by the small elements within the printhead.

Ribbon is only used with the thermal transfer print method. Direct thermal media does not use ribbon. When ribbon is used, it must be as wide as or wider than the media being used. If the ribbon is narrower than the media, areas of the printhead are unprotected and subject to premature wear. Zebra ribbons have a coating on the back that protects the printhead from wear.

ribbon wrinkle

A wrinkling of the ribbon caused by improper alignment or improper printhead pressure. This wrinkle can cause voids in the print and/or the used ribbon to rewind unevenly. This condition should be corrected by performing adjustment procedures.

roll media

Media that comes supplied rolled onto a core (usually cardboard). It can be continuous (no separations between labels)

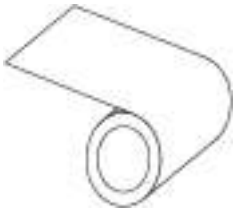

or non-continuous (some type of separation between labels).

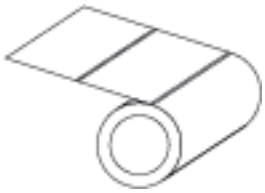

Contrast this with fanfold media on page 196.

supplies

A general term for media and ribbon.

symbology

The term generally used when referring to a barcode.

tag stock

A type of media having no adhesive backing but featuring a hole or notch by which the tag can be hung on something. Tags are usually made of cardboard or other durable material and are typically perforated between tags. Tag stock can come on rolls or in a fanfold stack. (See gap/notch media on page 197.)

tear-off mode

A mode of operation in which the user tears the label or tag stock away from the remaining media by hand.

thermal transfer

A printing method in which the printhead presses an ink or resin coated ribbon against the media. Heating the printhead elements causes the ink or resin to transfer onto the media. By selectively heating the printhead elements as the media and ribbon move past, an image is printed onto the media.

Contrast this with direct thermal on page 195.

void

A space on which printing should have occurred, but did not due to an error condition such as wrinkled ribbon or faulty print elements. A void can cause a printed barcode symbol to be read incorrectly or not at all.