PowerScan™ Family PD/PM/PBT9600

PRODUCT REFERENCE GUIDE

Industrial Corded and Cordless Handheld Area Imager Bar Code Reader

DATALOGIC

Datalogic S.r.l.
Via S. Vitalino, 13
40012 Calderara di Reno (BO)
Italy
Tel. +39 051 3147011
Fax +39 051 3147205

© 2011-2024 Datalogic S.p.A. and /or its affiliates

All rights reserved. Without limiting the rights under copyright, no part of this documentation may be reproduced, stored in or introduced into a retrieval system, or transmitted in any form or by any means, or for any purpose, without the express written permission of Datalogic S.p.A. and/or its affiliates.

Owners of Datalogic products are hereby granted a non-exclusive, revocable license to reproduce and transmit this documentation for the purchaser's own internal business purposes. Purchaser shall not remove or alter any proprietary notices, including copyright notices, contained in this documentation and shall ensure that all notices appear on any reproductions of the documentation.

Electronic versions of this document may be downloaded from the Datalogic website (www.datalogic.com). If you visit our website and would like to make comments or suggestions about this or other Datalogic publications, please let us know via the "Contact" page.

Disclaimer

Datalogic has taken reasonable measures to provide information in this manual that is complete and accurate, however, Datalogic shall not be liable for technical or editorial errors or omissions contained herein, nor for incidental or consequential damages resulting from the use of this material. Datalogic reserves the right to change any specification at any time without prior notice.

Trademarks

Datalogic and the Datalogic logo are registered trademarks of Datalogic S.p.A. in many countries, including the U.S.A. and the E.U.

PowerScan is a trademark of Datalogic S.p.A. and/or its affiliates, registered in the U.S. All other trademarks and brands are property their respective owners.

Patents

See www.patents.datalogic.com for patent list.

Software Version

This manual refers to the following software versions and later: BL41 03/Feb/2022.

TABLE OF CONTENTS

PREFACE XV
- **About this Manual ..... xv**
- **Overview ..... xv**
  - Manual Conventions xvi
- **Ergonomic Recommendations ..... xvii**
- **Technical Support ..... xvii**
  - Support Through the Website xvii
  - Reseller Technical Support xvii

CHAPTER 1. INTRODUCTION 1
- **About the Reader 1**
  - General Features 3
  - PM9600 4-key and 16-key Models 4
- **Battery Safety (Only for PM/PBT9600) 5**
- **Programming the Reader 6**
  - Configuration Methods 6
    - Programming Bar Codes 6
    - Datalogic Aladdin™ 6

CHAPTER 2. SETUP 7
- **Unpacking 7**
- **Setting Up the PowerScan™ PD9600 reader 7**
- **Connecting the Host Interface 7**
  - Connecting the Cable 7
  - RS-232 Serial Connection 8
  - USB Connection 9
  - CM9681 Power Over Ethernet (PoE) Connection 11
  - CM9681 External Power Connection 11
  - CM9680-81 Compatible Cables 11
- **Using the PowerScan™ PD9600 ..... 12**
- **Setting Up the PowerScan™ PM/PBT9600 Reader 13**
- **Using the PowerScan™ PM/PBT9600 ..... 13**
- **Charging the Batteries 14**
- **Replacing the Batteries 15**
- **Linking the Reader 15**
  - Link Datalogic Devices to Base 15
  - Link Reader as Serial Device to a Bluetooth Host 16
  - Bluetooth Passkey or Pin Code Entry Request 17
  - Power Off 17
  - Set Date and Time (optional) 17
- **Using the BC9600 base station 18**
- **Base Station Models 19**
  - Base Station Models 19
  - Connection Module Models 19
- **Mounting Instructions 20**
  - Permanent Mounting 20
  - Wall Mounting 20
    - Changing the Orientation of the Positioning Tab: 21

Portable Desktop Mounting 22
Base Station Fast Release - Mounting the Plate 22
Connection Module Fast Release - Mounting the Bracket (Not Valid for BC9620 Models) 24
System Connections 27
Connecting and Disconnecting the Cables 29
Connecting BC9630 Cables 29
Disconnecting BC9630 Cables 30
Connecting BC9631 Multi-interface Cable 31
Disconnecting BC9620 Cables 32
Connecting BC9680 cables 32
Connecting BC9681 cables 33
Connecting the Base Station 34
System and Network Layouts 37
Stand Alone Layouts 37
BC9600 Configuration 38
Serial Configuration 38
Configuration Bar Codes 38
Interface Selection 38
Configuring the Interface 39
Customizing Configuration Settings 42
Using the Programming Bar Codes 42
Datalogic Aladdin™ Utility 42
Interface Settings 42
Configuring Other Features 43
Software Version Transmission 43
Resetting the Product Configuration to Defaults 43
Restore Custom Default Configuration 43

CHAPTER 3. CONFIGURATION WITH BAR CODES 44
Configuration Parameters 44
Interface Configuration: 44
Parameters Common to all Interface Applications: 44
Symbology-specific parameters: 45
GLOBAL INTERFACE FEATURES 46
Host Commands — Obey/Ignore 46
USB Suspend Mode 46
RS-232 INTERFACE 47
RS-232 STANDARD SETTINGS 48
Baud Rate 48
Data Bits 49
Stop Bits 50
Parity 51
Handshaking Control 52
RS-232/USB-COM INTERFACES 53
RS-232/USB-COM SETTINGS 54
Intercharacter Delay 54
Beep On ASCII BEL 55
Beep On Not on File 55
ACK NAK Options 56
ACK Character 57
NAK Character 57
ACK NAK Timeout Value 58
ACK NAK Retry Count 58
ACK NAK Error Handling 59
Indicate Transmission Failure 59
Disable Character 60
Enable Character 60
KEYBOARD INTERFACE 61
COUNTRY MODE 62
Setup on PC to use ALT Universal 62
Setting Country Mode 63

OTHER KEYBOARD PARAMETERS 77
Encoding Type 77
ALT Output Type 84
Keyboard Numeric Keypad 85
Keyboard Send Control Characters 85
Intercode Delay 86
USB Keyboard Speed 87
USB-OEM INTERFACE 88
USB-OEM Device Usage 89
ETHERNET INTERFACE 90
DHCP 91
Static IP Address 91
Subnet Mask 92
Gateway Address 92
DNS1 Address 93
DNS2 Address 93
Device Name 94
Data Socket Port 94
Aladdin Socket Port 95
Image Socket Port 95
LOGGER Socket Port 96
DATA Flow Control Selection 96
DATA Prefix Counter Selection 97
AIDA LED mode 97
Scanner Character Terminator 98
Controller Input Data Buffer Size 99
Controller Output Data Buffer Size 100
Host Name 101
Connection Role of TCPIP Channel 101
Socket Server Address 102
DATA FORMAT 103
GLOBAL SETTINGS 104
Global Prefix/Suffix 104
Case Conversion 105
Character Conversion 105
Global AIM ID 106
GS1-128 AIM ID 106
LABEL ID 107
Label ID: Pre-loaded Sets 107
Label ID: Set Individually Per Symbology 108
Label ID Control 108
Label ID Symbology Selection 109
POWER OPTIMIZATION 114
Power Optimization 115
READING PARAMETERS 116
SCANNING FEATURES 117
Scan Mode 117
Scanning Active Time 118
Flash On Time 118
Flash Off Time 119
Double Read Timeout 119
Stand Detection Behavior (Desk only) 121
Stand Mode/Object Detection Indication (Stand Mode Flash) 122
Stand Mode/Object Detection Sensitivity 122
Stand Mode/Object Detection Illumination Off Time 123
Corded Stand Mode 123
Dock Detection Beep 124
LED AND BEEPER INDICATORS 125
Power On Alert 125
Good Read Beep Type 125
Good Read Beep Frequency 126

Good Read Beep Length 127
Good Read Beeper Volume / Vibration 128
Vibration Feedback for Good Read 128
RGB Good Read Enable 129
RGB Good Read Color 129
Good Read LED Duration 130
Good Read: When to Indicate 131
Green Spot Duration 131
CAMERA CONTROL 132
Aiming Pointer 132
Pick Mode 132
Illumination Power Level (only for STD, HP, DC models) 133
Mobile Phone Mode 133
Image Capture 134
Multiple Labels Ordering by Code Symbology 134
Multiple Labels Ordering by Code Length 134
DPM STRATEGY (DPX ONLY) 135
Set DPM Strategy 135
MOTION FEATURES 137
Motionless Timeout 138
Motion Sensitivity 138
Motion Aiming Control 139
1D SYMBOLOGIES 140
DISABLE ALL SYMBOLOGIES 141
1D GLOBAL FEATURE 141
1D Normal/Inverse Symbol Control 142
COUPON CONTROL 143
Coupon Control 143
UPC-A 144
UPC-A Enable/Disable 144
UPC-A Check Character Transmission 144
Expand UPC-A to EAN-13 145
UPC-A Number System Character Transmission 145
UPC-E 146
UPC-E Enable/Disable 146
UPC-E Check Character Transmission 146
Expand UPC-E to EAN-13 147
Expand UPC-E to UPC-A 147
UPC-E Number System Character Transmission 148
GTIN Formatting 148
EAN-13 149
EAN-13 Enable/Disable 149
EAN-13 Check Character Transmission 149
EAN-13 Flag 1 Character 150
EAN-13 to ISBN Conversion 150
EAN-13 to ISSN Conversion 151
EAN-8 152
EAN-8 Enable/Disable 152
EAN-8 Check Character Transmission 152
Expand EAN-8 to EAN-13 153
UPC/EAN GLOBAL SETTINGS 154
UPC/EAN Price Weight Check 154
UPC/EAN Quiet Zones 155
Add-Ons 155
Optional Add-ons 156
Optional Add-On Timer 157
GS1 DATABAR™ OMNIDIRECTIONAL 158
GS1 DataBar Omnidirectional Enable/Disable 158
GS1 DataBar Omnidirectional to GS1-128 Emulation 158
GS1 DATABAR™ EXPANDED 159
GS1 DataBar Expanded Enable/Disable 159

GS1 DataBar Expanded to GS1-128 Emulation 159
GS1 DataBar Expanded Length Control 160
GS1 DataBar Expanded Set Length 1 160
GS1 DataBar Expanded Set Length 2 161
GS1 DATABAR™ LIMITED 162
GS1 DataBar Limited Enable/Disable 162
GS1 DataBar Limited to GS1-128 Emulation 162
CODE 39 163
Code 39 Enable/Disable 163
Code 39 Check Character Calculation 163
Code 39 Check Character Transmission 164
Code 39 Start/Stop Character Transmission 164
Code 39 Full ASCII 165
Code 39 Quiet Zones 165
Code 39 Length Control 166
Code 39 Set Length 1 166
Code 39 Set Length 2 167
TRIOPTIC CODE 168
Trioptic Code Enable/Disable 168
CODE 39 DANISH PPT 168
Code 39 Danish PPT Enable/Disable 168
CODE 39 PZN 169
Code 39 PZN Enable/Disable 169
CODE 39 LA POSTE 169
Code 39 La Poste Enable/Disable 169
CODE 32 (ITALIAN PHARMACEUTICAL) 170
Code 32 Enable/Disable 170
Code 32 Feature Setting Exceptions 170
Code 32 Check Character Transmission 170
Code 32 Start/Stop Character Transmission 171
CODE 39 CIP HR (FRENCH PHARMACEUTICAL) 171
Code 39 CIP HR Enable/Disable 171
CODE 128 172
Code 128 Enable/Disable 172
Expand Code 128 to Code 39 172
Code 128 Check Character Transmission 173
Code 128 Function Character Transmission 173
Code 128 Quiet Zones 174
Code 128 Length Control 174
Code 128 Set Length 1 175
Code 128 Set Length 2 175
GS1-128 176
GS1-128 Enable 176
INTERLEAVED 2 OF 5 (I 2 OF 5) 177
I 2 of 5 Enable/Disable 177
I 2 of 5 Check Character Calculation 177
I 2 of 5 Check Character Transmission 178
I 2 of 5 Length Control 179
I 2 of 5 Set Length 1 179
I 2 of 5 Set Length 2 180
INTERLEAVED 2 OF 5, FEBRABAN 181
Interleaved 2 of 5, Febraban format Enable / Disable 181
INTERLEAVED 2 OF 5 CIP HR 181
Interleaved 2 of 5 CIP HR Enable/Disable 181
MATRIX 2 OF 5 182
Matrix 2 of 5 Enable/Disable 182
Matrix 2 of 5 Check Character Calculation 182
Matrix 2 of 5 Check Character Transmission 183
Matrix 2 of 5 Length Control 183
Matrix 2 of 5 Set Length 1 184
Matrix 2 of 5 Set Length 2 184

STANDARD 2 OF 5 185
Standard 2 of 5 Enable/Disable 185
Standard 2 of 5 Check Character Calculation 185
Standard 2 of 5 Check Character Transmission 186
Standard 2 of 5 Length Control 186
Standard 2 of 5 Set Length 1 187
Standard 2 of 5 Set Length 2 187
COMPRESSED 2 OF 5 188
Compressed 2 of 5 Enable/Disable 188
Compressed 2 of 5 Check Character Calculation 188
Compressed 2 of 5 Check Character Transmission 189
Compressed 2 of 5 Length Control 189
Compressed 2 of 5 Set Length 1 190
Compressed 2 of 5 Set Length 2 190
DATALOGIC 2 OF 5 191
Datalogic 2 of 5 Enable/Disable 191
Datalogic 2 of 5 Check Character Calculation 191
Datalogic 2 of 5 Check Character Transmission 192
Datalogic 2 of 5 Length Control 192
Datalogic 2 of 5 Set Length 1 193
Datalogic 2 of 5 Set Length 2 193
INDUSTRIAL 2 OF 5 194
Industrial 2 of 5 Enable/Disable 194
Industrial 2 of 5 Check Character Calculation 194
Industrial 2 of 5 Check Character Transmission 195
Industrial 2 of 5 Length Control 195
Industrial 2 of 5 Set Length 1 196
Industrial 2 of 5 Set Length 2 196
IATA 197
IATA Enable/Disable 197
IATA Check Character Transmission 197
FOLLETT 2 OF 5 198
Follett 2 of 5 Enable/Disable 198
CODABAR 199
Codabar Enable/Disable 199
Codabar Check Character Calculation 199
Codabar Check Character Transmission 200
Codabar Start/Stop Character Transmission 200
Codabar Start/Stop Character Set 201
Codabar Start/Stop Character Match 201
Codabar Quiet Zones 202
Codabar Length Control 203
Codabar Set Length 1 203
Codabar Set Length 2 204
ABC CODABAR 205
ABC Codabar Enable/Disable 205
ABC Codabar Concatenation Mode 205
ABC Codabar Dynamic Concatenation Timeout 206
ABC Codabar Force Concatenation 206
ISBT 128 207
ISBT 128 Concatenation 207
ISBT 128 Concatenation Mode 207
ISBT 128 Dynamic Concatenation Timeout 208
ISBT 128 Force Concatenation 209
ISBT 128 Advanced Concatenation Options 209
CODE 11 210
Code 11 Enable/Disable 210
Code 11 Check Character Calculation 210
Code 11 Check Character Transmission 211
Code 11 Length Control 211
Code 11 Set Length 1 212

Code 11 Set Length 2 212
CODE 93 213
Code 93 Enable/Disable 213
Code 93 Check Character Calculation 213
Code 93 Check Character Transmission 214
Code 93 Length Control 214
Code 93 Set Length 1 215
Code 93 Set Length 2 215
Code 93 Quiet Zones 216
MSI 217
MSI Enable/Disable 217
MSI Check Character Calculation 217
MSI Check Character Transmission 218
MSI Length Control 218
MSI Set Length 1 219
MSI Set Length 2 219
PHARMACODE 220
Pharmacode Enable/Disable 220
Pharmacode Label Direction 220
Pharmacode Length Control 221
Pharmacode Set Length 1 221
Pharmacode Set Length 2 222
PLESSEY 223
Plessey Enable/Disable 223
Plessey Check Character Calculation 223
Plessey Check Character Transmission 224
Plessey Length Control 224
Plessey Set Length 1 225
Plessey Set Length 2 225
BC412 226
BC412 Enable/Disable 226
BC412 Check Character Calculation 226
BC412 Length Control 227
BC412 Set Length 1 227
BC412 Set Length 2 228
2D SYMBOLOGIES 229
2D GLOBAL FEATURES 230
2D Maximum Decoding Time 231
2D Structured Append 232
2D Normal/Inverse Symbol Control 232
Decoding Normal/Mirrored Labels 233
AZTEC CODE 234
Aztec Code Enable / Disable 234
Aztec Code Length Control 234
Aztec Code Set Length 1 235
Aztec Code Set Length 2 235
CHINA SENSIBLE CODE 236
China Sensible Code Enable / Disable 236
China Sensible Code Length Control 236
China Sensible Code Set Length 1 237
China Sensible Code Set Length 2 237
DATA MATRIX 238
Data Matrix Enable / Disable 238
Data Matrix Square/Rectangular Style 238
Data Matrix Length Control 239
Data Matrix Set Length 1 239
Data Matrix Set Length 2 240
GS1 DOTCODE 241
DotCode Enable 241
DotCode High Resolution Enable 241
DotCode Position-based Decoding 242

Additional Options 242
MAXICODE 243
Maxicode Enable / Disable 243
Maxicode Primary Message Transmission 243
Maxicode Length Control 244
Maxicode Set Length 1 244
Maxicode Set Length 2 245
PDF417 246
PDF417 Enable / Disable 246
PDF417 Length Control 246
PDF417 Set Length 1 247
PDF417 Set Length 2 247
MICRO PDF417 248
Micro PDF417 Enable / Disable 248
Micro PDF417 Code 128 GS1-128 Emulation 248
Micro PDF417 Length Control 249
Micro PDF417 Set Length 1 249
Micro PDF417 Set Length 2 250
QR CODE 251
QR Code Enable / Disable 251
QR Code Length Control 251
QR Code Set Length 1 252
QR Code Set Length 2 252
MICRO QR CODE 253
Micro QR Code Enable / Disable 253
Micro QR Code Length Control 253
Micro QR Code Set Length 1 254
Micro QR Code Set Length 2 254
UCC COMPOSITE 255
UCC Optional Composite Timer 255
Postal Code Selection 256
Postnet BB Control 257
DIGIMARC 258
Digimarc 258
Set Digimarc Scale Parameter 258
OCR DECODING 259
OCR Decoding Predefined Templates 260
DISPLAY AND KEYBOARD FEATURES 261
Display and Keyboard Features 262
Display Operating Mode 262
Display Off Timeout 262
Backlight Enable 263
Font Size 263
Show no printable characters 264
Set the Display Append State for Host Message 264
Enable/disable buttons 265
Key Programming 266
Arrow Keys Mode (4-key models only) 267
Arrow Up String (4-key models only) 267
Arrow Down String (4-key models only) 268
Legend for Arrow UP (4-key models only) 268
Legend for Arrow DOWN (4-key models only) 269
Custom String for Display Legend 269
Configure Actions for Function Keys 270
ACTION CONFIGURATION FOR FUNCTION KEYS 271
Function Keys Configuration for 16-key Models Only 272
Function Keys Configuration for 4-key Models Only 273
DEFINE STRINGS 274
Configure string 1-5. 274
Function Keys for Batch Context 275
Set Action for F1 in Batch Context 276

Set Action for F2 in Batch Context 276
Set Action for F3 (Arrow up in 4K Model) in Batch context 277
Set Action for F4 (Arrow Down in 4K Model) in Batch context 277
Set Action for Shift (16K Model) in Batch context 277
ADDITIONAL FEATURES FOR 16-KEY MODELS 278
Last Code Shown Timeout 278
Display Time Stamping Mode 278
Mode Selection 279
Quantity Field 279
Quantity/Code Send Mode 280
Quantity/Code Separator 280
Interkey Timeout 281
Append Code 282
Echo 283
Keypress Sound 283
Lower Case 284
Enable Legend 284
Set Function Key Labels 285
BARCODE/KEY DIFFERENT DATA FORMAT 286
Set Barcode Header 286
Set Barcode Terminator 286
Set Key Sequence ID 287
Set Key Sequence Header 287
Set Key Sequence Terminator 287
Set String ID 288
Set String Header 288
Set String Terminator 289
POWER MANAGEMENT 290
POWER SAVE 291
Powerdown Timeout 291
BATTERY PROFILES 292
Battery Profiles 292
Battery Information 293
WIRELESS FEATURES 294
WIRELESS BEEPER FEATURES 296
Good Transmission Beep 296
Beep Frequency 296
Beep Duration 297
Beep Volume 298
Disconnect Beep 298
Docking (Connecting) Beep 299
Leash Alarm 299
Base Button Enable 300
Battery level indication with Double TAP 301
CONFIGURATION UPDATES 302
Automatic Configuration Update 302
Copy Configuration to Reader 302
Copy Configuration to Base Station 302
BATCH FEATURES 303
Batch Mode 303
Send Batch 303
Erase Batch Memory 304
Send but do not Erase Batch Memory 304
RF Batch Mode Transmit Delay 304
DIRECT RADIO AUTOLINK 305
Direct Radio Autolink 305
RF ADDRESS STAMPING 306
Source Radio Address Transmission 306
Source Radio Address Delimiter Character 306
Extended Statistics 307
Hand Held Statistic Frequency 307

REAL TIME CLOCK (RTC) CONFIGURATION 308
Time Tx Format 308
Date Transmission Format 308
Date-Time Separator 309
Date-Time Transmission Order 310
BLUETOOTH-ONLY FEATURES 311
Bluetooth Security Level 311
Bluetooth Radio Output Power 312
Wi-Fi Channels Exclusion 312
Bluetooth Discoverable Mode Timeout 318
Bluetooth Friendly Name 319
BLUETOOTH HID FEATURES 320
Bluetooth HID Alt Mode 320
FEATURES FOR STAR MODELS ONLY 321
STAR Radio Protocol Timeout 321
STAR Radio Transmit Mode 321
4 Digit Address Stamping 323
Assign Unique Address to the Gun 323
4 Digit Cradle Address Stamping 324
Cradle Address Stamping 324
Cradle Address Delimiter 325
STAR System Speed 325
STAR Frequency Agility 326

CHAPTER 4. REFERENCES 328
RS-232 Parameters 329
RS-232 Only 329
Baud Rate 329
Data Bits 329
Stop Bits 329
Parity 329
Handshaking Control 329
RS-232/USB COM Parameters 330
Intercharacter Delay 330
ACK NAK Options 331
ACK Character 331
NAK Character 332
ACK NAK Timeout Value 333
ACK NAK Retry Count 334
Disable Character 335
Enable Character 336
Keyboard Interface 337
Intercode Delay 337
Data Format 338
Data Editing 338
Please Keep In Mind... 338
Global Prefix/Suffix 339
Example: Setting a Prefix 339
Global AIM ID 340
Label ID 341
Label ID: Pre-loaded Sets 341
Label ID: Set Individually Per Symbology 343
Character Conversion 345
Scanning Features 346
Scan Mode 346
Scanning Active Time 348
Aiming Duration Time 349
Flash On Time 350
Flash Off Time 351
LED and Beeper Indicators 352
Good Read LED Duration 352

RF Features **353**
Automatic Configuration Update 353
RF Address Stamping 353
Source Radio Address Delimiter Character 353
STAR Radio Protocol Timeout 354
Symbologies **355**
Set Length 355
Set Length 1 355
Set Length 2 356

CHAPTER 5. MESSAGE FORMATTING **357**
Message Formatting **357**
Cursor Control **358**
Font Selection **358**
Clearing Display **359**
LED and Beeper Control **359**
Setting RTC **359**

APPENDIX A. TECHNICAL SPECIFICATIONS **360**
PD9600 Technical Specifications **360**
PM/PBT9600 Technical Specifications **364**
Decoding Capabilities **367**
BC9600 Technical Specifications **368**
LED and Beeper Indications **369**
User Indications for PD9600 ..... **369**
User Indications for PBT/PM9600 (Gun Only) **370**
User Indications for BC9600 Base Stations **372**
Programming Mode **373**
Troubleshooting **373**

APPENDIX B. MAINTENANCE **375**
Cleaning Procedure **375**
Cleaning Plastic Surfaces 375
Common Cleaning Solutions 375
Cleaning Enclosure and Window Surface 376

APPENDIX C. STANDARD DEFAULTS **377**
Default Exceptions **393**

APPENDIX D. AIDA LED **395**
CM9681-N100 with Enabled AIDA LED Mode **395**
BF/NS LED (Bus Failure) 395
SF/MS LED (System Failure) 395
Link/Activity 395
CM9681-N100 with Disabled AIDA LED Mode **396**
BF/NS LED (Network Status) 396
SF/MS LED (Module Status) 396
Link/Activity 396
CM9681-N200 ..... **396**
BF/NS LED (Network Status) 396
SF/MS LED (Module Status) 396
P1 and P2 LEDs (Link/Activity) 397

APPENDIX E. HOST COMMANDS CHARACTERS **398**

APPENDIX F. SAMPLE BARCODES **399**
Sample Barcodes **399**
1D Barcodes 399
GS1 DataBar™ (RSS) 401
GS1 DataBar™ (-14) 401

2D Barcodes 402

APPENDIX G. KEYPAD 404

APPENDIX H. SCANCODE TABLES 406

Control Character Emulation 406

Single Press and Release Keys 406

Interface Type USB-Keyboard or USB-Keyboard for APPLE 407

Interface Type USB-Keyboard Alt Mode 409

APPENDIX I. ASCII CHART 411

PREFACE

ABOUT THIS MANUAL

This Product Reference Guide (PRG) is provided for users seeking advanced technical information, including connection, programming, maintenance and specifications. The Quick Reference Guide (QRG) and other publications associated with this product are downloadable free of charge from the website listed on the back cover of this manual.

Typically, units are factory-programmed for the most common terminal and communications settings. If you need to modify any programmable settings, custom configuration can be accomplished by scanning the programming bar codes within this guide.

Programming can alternatively be performed using the Datalogic Aladdin™ Configuration application, which is available from the Datalogic website listed on the back cover of this manual. This multi-platform utility program allows device configuration using a PC. It communicates to the device using a serial or USB cable and can also create configuration bar codes to print.

OVERVIEW

Chapter 1, Introduction provides a product overview, battery safety information, and general information about programming the reader.

Chapter 2, Setup presents information about unpacking and setting up the reader, and interface configuration bar codes and details.

Chapter 3, Configuration Using Bar Codes provides instructions and bar code labels for customizing your reader. There are different sections for interface types, general features, data formatting, and symbology-specific features.

Chapter 4, References provides details concerning programmable features.

Appendix A, Technical Specifications lists physical and performance characteristics, as well as environmental specifications. It also provides standard cable pin-outs and descriptions of the functions and behaviors of the reader's LED and Beeper indicators.

Appendix B, Maintenance provides information about the proper cleaning procedure to guarantee reliable scanning.

Appendix C, Standard Defaults references common factory default settings for reader features and options.

Appendix D, AIDA LED describe how the LEDs behave.

Appendix E, Host Commands includes the list of commands recognized when transmitted to the scanner over the standard RS-232 host port (RS232, RS232-WN, RS232-OPOS) or the Aux port or USB-COM port.

Appendix F, Sample Bar Codes offers sample bar codes of several common symbologies.

Appendix G, Keypad includes numeric bar codes to be scanned for certain parameter settings.

Appendix H, Scancode Tables lists control character emulation information for USB Keyboard interfaces.

Appendix I, ASCII Chart lists hexadecimal reference values for ASCII characters.

Manual Conventions

The following conventions are used in this document:

The symbols listed below are used in this manual to notify the reader of key issues or procedures that must be observed when using the reader:

NOTE: This symbol draws attention to details or procedures that may be useful in improving, maintaining, or enhancing the performance of the hardware or software being discussed.

CAUTION: This symbol advises you of actions that could damage equipment or property.

WARNING: This symbol advises you of actions that could result in harm or injury to the person performing the task.

HIGH VOLTAGE: This symbol alerts the user they are about to perform an action involving, either a dangerous level of voltage, or to warn against an action that could result in damage to devices or electrical shock.

LASER: This symbol alerts the user they are about to perform an action involving possible exposure to laser light radiation.

GROUNDING: This symbol advises you to pay particular attention to the grounding instructions for correct device functioning.

ESD: This symbol identifies a procedure that requires you take measures to prevent Electrostatic Discharge (ESD) e.g., use an ESD wrist strap. Circuit boards are most at risk. Please follow ESD procedures.

ERGONOMIC RECOMMENDATIONS

CAUTION: In order to avoid or minimize the potential risk of ergonomic injury, follow the recommendations below. Consult with your local Health & Safety Manager to ensure that you are adhering to your company's safety programs to prevent employee injury.

- Reduce or eliminate repetitive motion
- Maintain a natural position
- Reduce or eliminate excessive force
- Keep objects that are used frequently within easy reach
- Perform tasks at correct heights
- Reduce or eliminate vibration
- Reduce or eliminate direct pressure
- Provide adjustable workstations
- Provide adequate clearance
- Provide a suitable working environment
- Improve work procedures.

TECHNICAL SUPPORT

Support Through the Website

Datalogic provides several services as well as technical support through its website. Log on to (www.datalogic.com).

For quick access, from the home page click on the search icon, and type in the name of the product you're looking for. This allows you access to download Data Sheets, Manuals, Software & Utilities, and Drawings.

Hover over the Support & Service menu for access to Services and Technical Support.

Reseller Technical Support

An excellent source for technical assistance and information is an authorized Datalogic reseller. A reseller is acquainted with specific types of businesses, application software, and computer systems and can provide individualized assistance.

NOTES

CHAPTER 1
INTRODUCTION

ABOUT THE READER

The PowerScan family of bar code readers are the ultimate industrial handheld scanners designed and constructed to withstand the toughest environmental conditions. The PowerScan 9600 imagers have an ultra-rugged design, an ergonomic shape with well-balanced weight to reduce operator stress during daily activities and an intuitive aiming system, allowing the highest first-pass reading rate while reducing unnatural wrist movement.

The PowerScan 9600 area imagers are available in five different optics, to satisfy any customer need. The Standard Range optic is ideal for most of the applications requiring barcode reading at intuitive distance; the High Performance optic adds the capability to decode high density barcodes together with an increased depth of field on standard 1D/2D codes; the Document Capture model, available for the PD9630 and the PBT9600, is thought for Wide Angle code reading and Document Capture applications; the Auto Range model is empowered with the new 1D/2D Extra-long Range scan engine to address extended range scanning operations; the DPX series addresses Direct Part Marking (DPM) applications where codes are directly marked on the items for traceability with different marking technologies.

The PowerScan 9600 area imagers also feature Datalogic's exclusive 3 Green Lights (3GL™) for superior good-read feedback together with a loud beeper and vibration. The 'Green Spot' technology directly on the code and dual Good Read LEDs increase visibility at any angle. All models have multi-interface capabilities featuring the most popular interfaces: RS-232, USB and offer an optional Ethernet for standard or industrial uses.

Datalogic's Motionix™ motion-sensing technology detects the natural actions of the operator to automatically switch the scanner into the desired scanning mode (handheld or presentation scanning).

The PowerScan 9600 cordless model further enhances the operator efficiency and safety with Datalogic's STAR Cordless System™. The Datalogic STAR Cordless System™ for narrow-band radio communications was developed specifically to maximize efficiency and reliability for handheld scanner data collection applications. The PowerScan PM9600 models are equipped with a new generation of the STAR-System that further improves the already outstanding features of versatility, ease of use and radio range.

Accurate power management allows long lasting battery life to always guarantee more than one shift of intensive scanning. The PowerScan 9600 scanner features Datalogic's Wireless Charging System. Based on inductive-charging technology, Datalogic's Wireless Charging System eliminates battery contacts and pins that often get dirty, bent, or broken over time – and this removes a key point of failure for devices used in industrial and retail functions.

The PM9600 series offers two display options: 4 configurable keys and a full 16-key keyboard. This increases interaction between the host and the user allowing a two-way exchange of information for more reliable and effective communications.

The PowerScan 9600 Bluetooth models can be directly paired to any device supporting Bluetooth connections, or to the Bluetooth base station as an alternative to PM9600 products.

The BC9600 base/charger has a modular design and is available with multiple interface plug-ins for standard and industrial communication, such as RS-232, USB, Standard Ethernet and Industrial Ethernet protocols.

The BC9600 base/charger also includes in one model two different Ethernet connections: Standard Ethernet and Industrial Ethernet protocols such as EtherNet/IP and Profinet.

The table below shows the unique features of each model.

MODEL	TYPE	CONNECTIVITY	OPTICAL FEATURE
PD9630	SR	USB or RS232	Standard Range, standard and low density codes
PD9630	HP	USB or RS232	High Performance, high, standard and low density codes
PD9630	DC	USB or RS232	Document Capture, wide angle, standard and low density code, color sensor for image capture
PD9630	AR	USB or RS232	Auto range area reader, auto range optics
PD9630	DPX	USB or RS232	Direct Part Marking (DPM) reader with auto range optics and multi-color illumination system
PM9600	SR433RB or SR910RB	Star® 433 MHz or 910 MHz	Standard Range, standard and low density codes, no display
PM9600	HP433RB or HP910RB	Star® 433 MHz or 910 MHz	High Performance, high, standard and low density codes, no display
PM9600	DHP433RB or DHP910RB DKHP433RB or DKHP910RB	Star® 433 MHz or 910 MHz	High Performance, high, standard and low density codes, display and 4k or 16k keyboards
PM9600	AR433RB DKAR433RB	Star® 433 MHz	Auto Range Area Imager, Auto Range Optics - No display - With display and 16k keyboard
PM9600	DPXRB	Star® 433 MHz	Direct Part Marking (DPM) reader with auto range optics and multi-color illumination system
PBT9600	SRRB	Bluetooth ®	Standard Range, standard and low density codes, no display
PBT9600	HPRB	Bluetooth ®	High Performance, high, standard and low density codes, no display
PBT9600	DCRB	Bluetooth ®	Document Capture, standard and low density codes, no display
PBT9600	ARRB	Bluetooth ®	Auto Range Area Imager, auto range optics, no display
PBT9600	DPXRB	Bluetooth ®	Direct Part Marking (DPM) reader with auto range optics and multi-color illumination system

General Features

To read a symbol or capture an image, simply aim the reader and pull the trigger. The PowerScan™ PD/PM/PBT9600 is a powerful omni-directional reader, so the orientation of the symbol is not important. Datalogic's exclusive patented 'Green Spot' for good-read feedback helps to improve productivity in noisy environments or in situations where silence is required.

The PowerScan™ PD/PM/PBT9600 reliably decodes all standard 1D (linear) and 2D bar codes, including GS1 DataBar™ linear codes, Postal Codes (China Post), Stacked Codes (such as GS1 DataBar Expanded Stacked, GS1 DataBar Stacked, GS1 DataBar, Stacked Omnidirectional). The data stream - acquired from decoding a symbol - is rapidly sent to the host. The reader is immediately available to read another symbol.

FEATURE	DESCRIPTION
Omni-directional Operating	To read a symbol or capture an image, you simply aim the reader and pull the trigger. Since the PowerScan™ PD/PM/PBT9600 is a powerful omni-directional reader, the orientation of the symbol is not important.
Decoding	Thanks to powerful algorithms, PowerScan™ PD/PM/PBT9600 reliably decodes all major 1D (linear) barcodes, 2D stacked codes (such as PDF417), 2D matrix symbols (such as DataMatrix), postal codes (such as POSTNET, PLANET). The data stream — acquired from decoding a symbol — is rapidly sent to the host. The reader is immediately available to read another symbol.
Formatting and Concatenating	The string of a decoded code may be processed according to either a simple or advanced data formatting and be concatenated.
Imaging	PowerScan™ PD/PM/PBT9600 can also function as a camera by capturing images. Color images are possible with -DC model.
Autoscanning	An autoscan command causes the reader to scan continuously and to monitor the central zone of its reading area. Not available for PD9630-AR and PM/PBT9600-AR models.
Flash Memory	Flash technology allows you to upgrade the PowerScan™ PD/PM/PBT9600 reader as new symbologies are supported or as improved decoding algorithms become available.
USA Driver License Parsing	The reader can be set up to select and output a subset of data elements from USA Driver License PDF417 barcodes. This feature can be enabled using either Datalogic Aladdin™ or the barcodes in the USA Driver License Parsing Quick Reference Guide (QRG), available on the Datalogic website.

PM9600 4-key and 16-key Models

The PM9600 series offers two display options: 4 configurable keys and a full 16-key keyboard. This increases interaction between the host and the user allowing a two-way exchange of information for more reliable and effective communications.

The table below illustrates the key functions of the two models.

	The 4-key keyboard has two fully configurable generic Function keys (F1 and F2) and two arrow keys. These keys are fully customizable to perform specific tasks (e.g. scrolling the list of items, navigating menus, etc.). Not available for AR models.
	The 16 keys keyboard is active in numeric data-entry mode by default. It means you can enter any numeric combination including '.' (F2 key). By pressing the yellow arrow key (bottom left corner) you switch to the alphanumeric keyboard which enables the T9-type data entry mode (i.e. consecutive and rapid pressing of the same key makes different characters appear on the display). Additional function keys are available: • F1 key turns ON/OFF the backlight of the keyboard • F3 key deletes the last character entered • F4 key clears the entire screen To send the numeric / alphanumeric string to the host, press the green Enter key in the lower right corner.

BATTERY SAFETY (ONLY FOR PM/PBT9600)

To reinstall, charge and/or perform any other action on the battery, follow the instructions in this manual.

NOTE: Before installing the Battery, read "Battery Safety" on this and the following pages. Datalogic recommends annual replacement of rechargeable battery packs to ensure maximum performance.

WARNING: Do not discharge the battery using any device except for the reader. When the battery is used in devices other than the designated product, it may damage the battery or reduce its life expectancy. If the device causes an abnormal current to flow, it may cause the battery to become hot, explode or ignite and cause serious injury.
Lithium-ion battery packs may get hot, explode or ignite and cause serious injury if exposed to abusive conditions. Be sure to follow the safety warnings listed below:

- **Do not place the battery pack in fire or heat.**
- **Do not connect the positive terminal and negative terminal of the battery pack to each other with any metal object (such as wire).**
- **Do not carry or store the battery pack together with metal objects.**
- **Do not pierce the battery pack with nails, strike it with a hammer, step on it or otherwise subject it to strong impacts or shocks.**
- **Do not solder directly onto the battery pack.**
- **Do not expose the battery pack to liquids, or allow the battery to get wet.**
- **Do not apply voltages to the battery pack contacts.**

In the event the battery pack leaks and the fluid gets into your eye, do not rub the eye. Rinse well with water and immediately seek medical care. If left untreated, the battery fluid could cause damage to the eye.

CAUTION: Always charge the battery at 32° – 104°F (0° - 40°C) temperature range.

Use only the authorized power supplies, battery pack, chargers, and docks supplied by your Datalogic reseller. The use of any other power supplies can damage the device and void your warranty.

Do not disassemble or modify the battery. The battery contains safety and protection devices, which, if damaged, may cause the battery to generate heat, explode or ignite.

Do not place the battery in or near fire, on stoves or other high temperature locations.

Do not place the battery in direct sunlight, or use or store the battery inside cars in hot weather. Doing so may cause the battery to generate heat, explode or ignite. Using the battery in this manner may also result in a loss of performance and a shortened life expectancy.

Do not place the battery in microwave ovens, high-pressure containers or on induction cookware.

Immediately discontinue use of the battery if, while using, charging or storing the battery, the battery emits an unusual smell, feels hot, changes color or shape, or appears abnormal in any other way.

Do not replace the battery pack when the device is turned on.

Do not remove or damage the battery pack's label.

Do not use the battery pack if it is damaged in any part.

Battery pack usage by children should be supervised.

CAUTION: Storage of batteries for long time at fully charged status or at fully discharged status should be avoided.

CAUTION: Only in case of long storage, to avoid deep discharge of the battery it is recommended to partially recharge the battery every three months to keep the charge status at a medium level.

As a reference, run a fast recharge for 20 minutes every three months on unused products to avoid any performance deterioration of the cell.

As with other types of batteries, Lithium-Ion (LI) batteries will lose capacity over time. Capacity deterioration is noticeable after one year of service whether the battery is in use or not. It is difficult to precisely predict the finite life of a LI battery, but cell manufacturers rate them at 500 charge cycles. In other words, the batteries should be expected to take 500 full discharge / charge cycles before needing replacement. This number is higher if partial discharging / recharging is adhered to rather than full / deep discharging,

The typical manufacturer advertised useful life of LI batteries is one to three years, depending on usage and number of charges, etc., after which they should be removed from service, especially in mission critical applications. Do not continue to use a battery that is showing excessive loss of capacity, it should be properly recycled / disposed of and replaced. For most applications, batteries should be replaced after one year of service to maintain customer satisfaction and minimize safety concerns.

Collect and recycle waste batteries separately from the device in compliance with European Directive 2006/66/EC, 2011/65/EU, 2002/96/EC and 2012/19/EU and subsequent modifications, US and China regulatory and others laws and regulations about the environment.

PROGRAMMING THE READER

Configuration Methods

Programming Bar Codes

The reader is factory-configured with a standard set of default features. After scanning the interface bar code, you can select other options and customize your reader through use of the instructions and programming bar code labels available in the corresponding features section for your interface. Customizable settings for many features are found in Configuration Parameters, starting on page 44.

Some programming labels, like “Restore Custom Defaults”, require only the scan of the single label to enact the change. Most, however, require the reader to be placed in Programming Mode prior to scanning them. Scan an ENTER/EXIT bar code once to enter Programming Mode. Once the reader is in Programming Mode, scan a number of parameter settings before scanning the ENTER/EXIT bar code a second time, which will then accept your changes, exit Programming Mode and return the reader to normal operation.

NOTE: There are some exceptions to the typical programming sequence described above. Please read the description and setting instructions carefully when configuring each programmable feature.

Datalogic Aladdin™

Datalogic Aladdin™ is a multi-platform utility program providing a quick and user-friendly configuration method via the RS-232/USB-COM/Ethernet interface. Aladdin allows you to program the reader by selecting configuration commands through a user-friendly graphical interface running on a PC. These commands are sent to the reader over the selected communication interface, or they can be printed as bar codes to be scanned. Aladdin also facilitates image capturing.

In addition, Aladdin makes it easy to upgrade the handheld’s firmware, to attain the benefits of new reader features. Reference the Datalogic Aladdin™ Online Help for more details.

Aladdin is available for download free of charge on the Datalogic website.

CHAPTER 2
SETUP

UNPACKING

Check carefully to ensure the reader and any cables or accessories ordered are present and undamaged. If any damage occurred during shipment, contact "Technical Support" on page xvii.

SETTING UP THE POWERSCAN™ PD9600 READER

Follow the steps below to connect and get your reader up and communicating with its host.

1. Connect the Cable to the reader and the Host (see page 7).
2. Configure the Interface (see page 39).
3. Configure the Reader starting page 44 (optional, as needed).

Connect the PowerScan™ by plugging directly into the host device as shown. The power can also be supplied through an external power supply via the Interface Cable supplied with a power jack.

CONNECTING THE HOST INTERFACE

Connecting the Cable

The reader kit you ordered to match your interface should provide a compatible cable for your installation. If this is not so, contact "Technical Support" on page xvii.

Follow the steps below to connect the cable to the reader.

1. Use a screwdriver to open the handle.

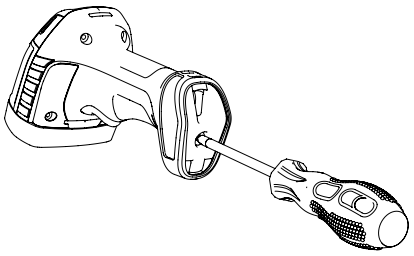

2. Insert the circular RJ45 cable (figure A) or use the adapter with non-circular RJ45 cables (figure B).

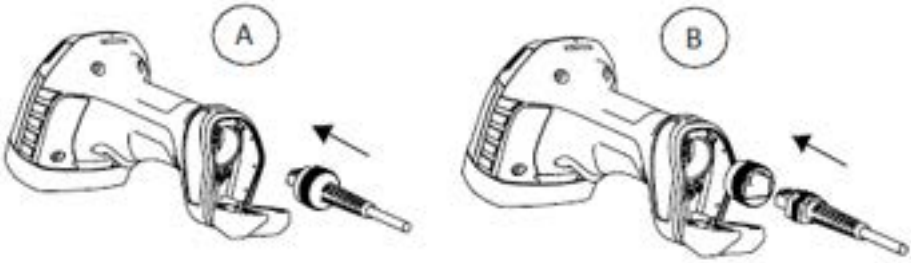

3. In this case, make sure to insert the adapter with the slot facing up (C). The rib (D) inside the adapter seat must fit into this slot.

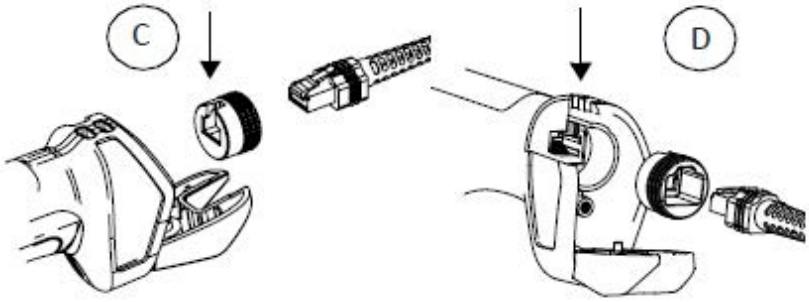

4. Once the cable is properly inserted, close the handle and screw it back into the body.

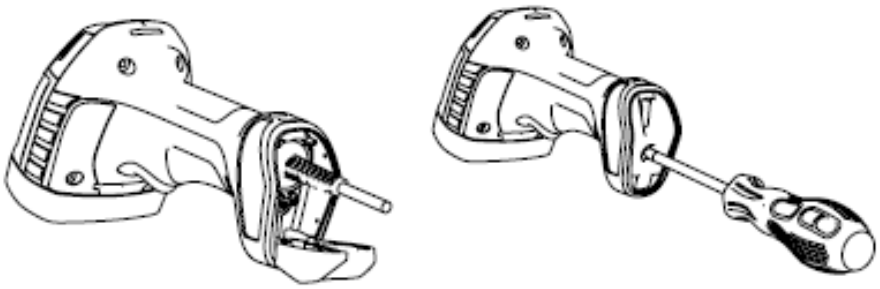

RS-232 Serial Connection

Turn off power to the terminal/PC and connect the reader to the terminal/PC serial port via the RS-232 cable as shown in Figure 1. If the terminal will not support POT (Power Off the Terminal) to supply reader power, use the approved power supply (AC Adapter). Plug the AC Adapter barrel connector into the socket on the RS-232 cable connector and the AC Adapter plug into a standard power outlet.

RS-232: The reader can communicate with a standard or Wincor-Nixdorf (W-N) RS-232 host.

RS-232 OPOS: This interface is used for OPOS/UPOS/JavaPOS systems.

USB Connection

Connect the reader to a USB port on the terminal/PC using the correct USB cable for the interface type you ordered.

USB: Select to communicate either by USB OEM, USB COM STD or USB Keyboard interface types by scanning the appropriate interface type bar codes available in this manual. The default interface is USB-KBD, or RS-232-STD.

NOTE: Specific cables are required for connection to different hosts. The connections illustrated in the following page are examples only. Actual connectors may vary from those illustrated, but the steps to connect the reader remain the same.

Figure 1 - Connection to the Host

RS-232

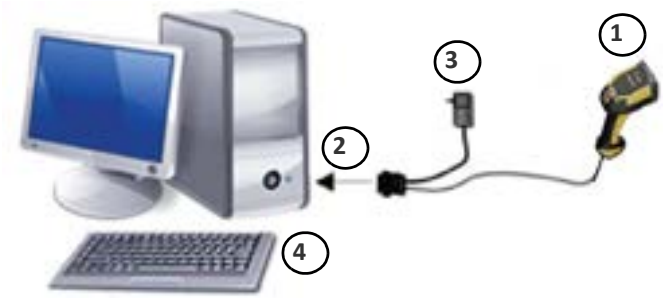

USB

CM9680 ETHERNET

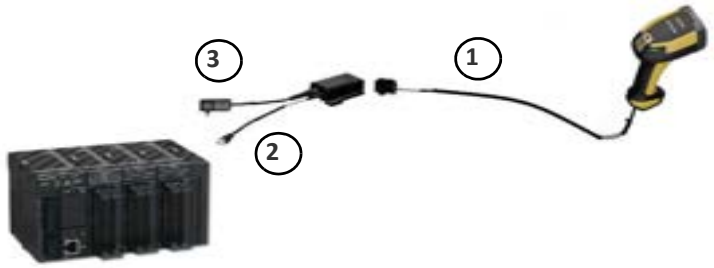

CM9681 ETHERNET

POE connection

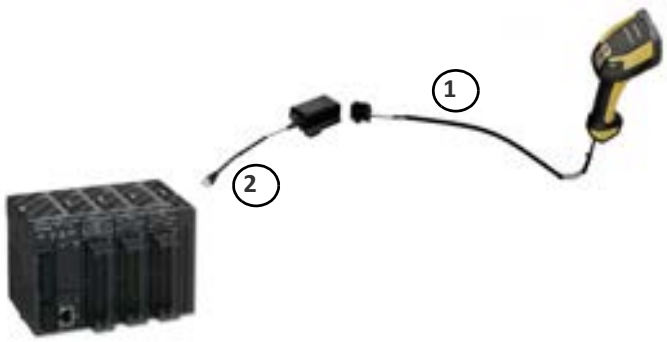

CM9681 ETHERNET

External Power Supply

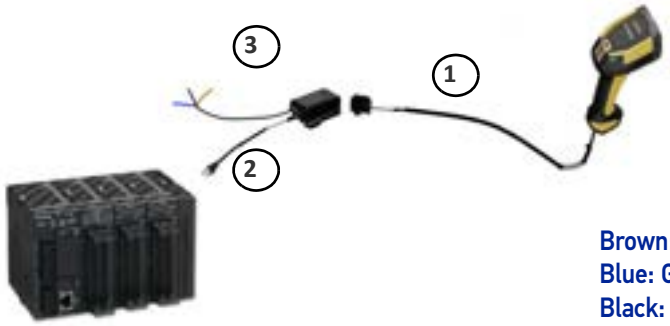

Brown:+10/30 VDC
Blue: GND
Black: Not used

CAUTION: To avoid damage to the scanner and/or to the host, first install correctly the cable into the scanner and then connect the other end of the cable into the host port of the PC.

NOTE: When using the CM9680/CM9681 modules, apply the ferrite provided with the device to the Ethernet cable 5 cm from the box. See the example below.

Figure 2 - How to mount a ferrite

CM9681 Power Over Ethernet (PoE) Connection

PIN	NAME	DESCRIPTION	
1	TX+	Transmit Data +	
2	TX-	Transmit Data -	
3	RX+	Receive Data +	
4	RX-	Receive Data -	
5	DC1-	DC Power -	
6	DC2-	DC Power -	
7	DC1+	DC Power +	
8	DC2+	DC Power +	

M12 X-Coded Female Ethernet Network Connector

Power can be applied to any of the data pairs according to the IEE 802.3af standard for Alternative A (Mid and Endspan) or Alternative B.

CM9681 External Power Connection

PIN	DESCRIPTION	
1	BROWN 10-30V	
2	NOT USED (WITH HOLE)	
3	BLUE GND	
4	BLACK	
5	NOT USED (WITH HOLE)	

CM9680-81 Compatible Cables

CABLE	PART NUMBER
PWR-IN CONNECTOR M12 5P F. A-Coded	93A050045
CABLE RS232 2M POT COIL IP67*	CAB-559
3-POLE STRAIGHT CABLE 3M	95A251290
3-POLE STRAIGHT CABLE 5M	95A251300
3-POLE STRAIGHT CABLE 7M	95A251320
3-POLE STRAIGHT CABLE 10M	95A251340
CAB-ETH-X-RJ ADAPTER FULL GETH-X to RJ45	93A050141
CAB-ETH-X-M01 M12-IP67 GETH-X CAB 1M	93A050122
CAB-ETH-X-M03 M12-IP67 GETH-X CAB 3M	93A050123

CAUTION: Use only the recommended RS232 cables. If you use a cable that is not recommended, do not connect the power supply to the cable.

CAUTION:Use only the recommended Ethernet cables or in alternative only high quality shielded cables.

USING THE POWERSCAN™ PD9600

The PowerScan™ PD9600 normally functions by capturing and decoding codes. The reader is equipped with an internal Motionix™ motion-sensing function which activates the aiming system on device motion. The intelligent aiming system indicates the field of view which should be positioned over the bar code:

Table 1 - Aiming System

OPTICS TYPE	AIMER PATTERN
SR HP	
DC	
AR DPX	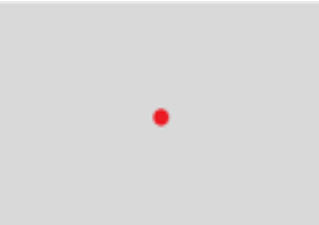

The field of view indicated by the aiming system will be smaller when the reader is closer to the bar code and larger when it is farther from the code. Symbologies with smaller bars or elements (mil size) should be read closer to the unit. Symbologies with larger bars or elements (mil size) should be read farther from the unit.

Successful reading is signaled by an audible tone plus a good-read green spot LED indicator (not present in AR model) and vibration.

With AR model, if enabled, a partial trigger press produces a red spot, which should be aimed over the code center to get the best reading performance. By completely pressing the trigger the illumination area appears and the code scanning starts.

Refer to "Aiming Pointer" on page 132 to enable or disable the Aiming pointer.

NOTE: Disabling the aiming pointer in PD9630-AR and PD9630-DPX models is strongly discouraged as it ensures best decoding performance.

SETTING UP THE POWERSCAN™ PM/PBT9600 READER

Follow the steps below to connect and get your reader up and communicating with its host.

1. Physically mount the Base station and connect it to the Host as described from page 20.
2. Charge the reader batteries (see page 14).
3. Link to the Base Station (see page 15).
4. Select the Interface Type (see page 38).
5. Configure the Reader starting on page 44 (optional, depends on settings needed).

NOTE: According to recent modification of Regulation for shipping Li-Ion based battery packs, the products and their spare battery packs parts are shipped with a very low residual charge (low state of charge).

Hence the needs:

- **that a new product must be fully recharged before starting to use it.**

and

- **that battery packs of the stocked products PBT/PM9600 and spare battery pack parts must be periodically recharged. For instance, by using a BC9600 base station powered up with a 12V Datalogic AC/DC adapter (cod.8-0935) for at least 30 minutes each 3 months.**

USING THE POWERSCAN™ PM/PBT9600

The PowerScan™ PM/PBT9600 normally functions by capturing and decoding codes. Turn on the scanner by pressing the trigger for 2 seconds. When the scanner starts up, it vibrates. After the vibration, the trigger can be released and the startup phase ends. The reader is equipped with an internal Motionix™ motion-sensing function which activates the aiming system on device motion. The intelligent aiming system indicates the field of view which should be positioned over the bar code:

Table 2 - Aiming System

OPTICS TYPE	AIMER PATTERN
SR HP	
DC	

OPTICS TYPE	AIMER PATTERN
AR DPX	

The field of view indicated by the aiming system will be smaller when the reader is closer to the bar code and larger when it is farther from the code. Symbologies with smaller elements (mil size) should be read closer to the unit. Symbologies with larger elements (mil size) should be read farther from the unit. Successful reading is signaled by an audible tone plus a good-read green spot LED indicator (not present in AR models) and vibration.

With the AR-model, if enabled, a partial trigger press produces a red spot, which should be aimed over the code center to get the best reading performance. By completely pressing the trigger the illumination area appears and the code scanning starts.

Refer to "Aiming Pointer" on page 132 to enable or disable the Aiming pointer.

NOTE: Disabling the aiming pointer in PM/PBT9600AR and PM/PBT9600DPX models is strongly discouraged as it ensures best decoding performance.

CHARGING THE BATTERIES

Once the BC9600 is powered, you can charge the reader's batteries. Place the PowerScan™ PM/PBT9600 into the BC9600 base station. The LEDs on the base station/battery charger turn green and flash orange/green when recharging begins.

The battery is completely charged when the Reader LED on the base station/battery charger turns green.

The battery can also be charged using the Multi Battery Charger accessory.

The Battery Status information can be easily retrieved by double tapping with your fingers on top of the head of the scanner

NOTE: The PowerScan PM/PBT9600 may get warm during charging: this is normal and does not mean a malfunction.

NOTE: Before using the battery, read "Battery Safety" page 5**. Datalogic recommends annual replacement of rechargeable battery packs to ensure maximum performance.**

REPLACING THE BATTERIES

1. Push in and slide the battery lock down to open the battery door, as shown below.

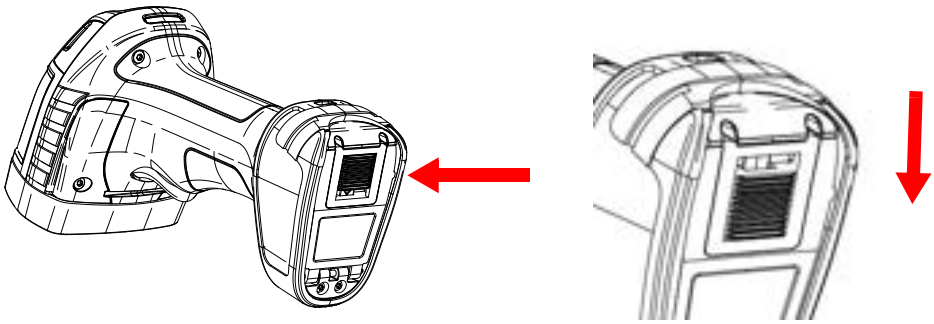

2. Open the battery door and extract the battery.

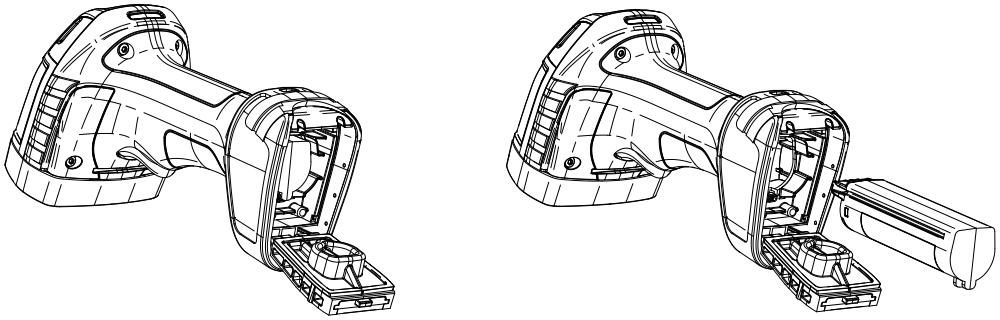

3. Invert the sequence to insert the battery and lock the battery door.

LINKING THE READER

Link Datalogic Devices to Base

Before configuring the interface it is necessary to link the handheld with the base.

To link the handheld and the base simply put it into the base. If the reader was previously linked to another base, you must first scan the **Unlink** bar code before re-linking to the new base.

See the Radio Characteristics table on page 368 for the maximum number of handhelds that can be simultaneously linked to a single base station.

Unlink

Link Reader as Serial Device to a Bluetooth Host

Use this procedure to let the PowerScan PBT9600 communicate with a Bluetooth host using the Bluetooth Serial Port Profile (SPP).

1. If using a Bluetooth adapter on the host device, install any driver provided with the adapter.
2. Scan the **Link to Host in SPP Mode** label below to make the reader visible to the host device.
3. Use the Bluetooth manager of the host device to “Discover new devices” and select "PBT9600...". If you receive an error message, it may be necessary to change the security settings on either the host device or the reader.
4. Use an RS-232 terminal program to see incoming data on the port designated by the Bluetooth manager of the host device.

Link to Host in SPP ModLink Reader as HID device to a Bluetooth host

Use this procedure to let the PowerScan PBT9600 send data to a Bluetooth host using the Bluetooth HID profile.

1. If using a Bluetooth adapter on the host device, install any driver provided with the adapter.
2. Scan the **Link to Host in HID Mode** label below to make the reader visible to the host device.
3. Use the Bluetooth manager of the host device to "Discover new devices" and select "PBT9600...". If you receive an error message, it may be necessary to change the security settings on either the host device or the reader.
4. On the host device, open the program that is meant to receive the incoming data.

The data transmitted by the reader will appear in the program as if it was typed using the keyboard of the host device.

Link to Host in HID Mode

NOTE: The PowerScan PBT9600 can be set up to authenticate the remote system when connecting, by entering a Bluetooth passkey or a PIN code. If you want to set the security level and authentication options suitable for your application, or when adding new equipment to a system that requires authentication or uses a custom security PIN, please see "Bluetooth Security Level" on page 311**.**

Bluetooth Passkey or Pin Code Entry Request

During the pairing process, based on Host and Reader security settings, you may need to enter a Bluetooth passkey or PIN code. When requested by the Host, simply enter the displayed code by scanning the corresponding bar codes for alphanumeric entry listed in Appendix G. Complete by scanning the **End** label. To restart the entering of the passkey, read the **Restart** label.

Passkey END

Passkey Restart

Power Off

Scan the bar code below to shut off power to the handheld until the next trigger pull. This function only applies to the PowerScan PM9600 and PBT9600 wireless models.

Power Off

Set Date and Time (optional)

1. Scan the Enter/Exit Programming barcode below to set date and time.

ENTER / EXIT PROGRAMMING MODE

2. Scan the Set Date barcode + six digits for Year, Month and Day (YYYYMMDD) from the "Keypad" on page 404.

Set Date

3. Scan Set Time + six digits for Hours, Minutes and Seconds (HHMMSS) from the "Keypad" on page 404.

Set Time

4. Scan the Enter/Exit Programming barcode to complete the procedure.

USING THE BC9600 BASE STATION

The BC9600 base station, when paired with one or more PowerScan™ PM/PBT9600 readers, builds a Cordless Reading System for the collection, decoding and transmission of bar code data. It can be connected to a Host PC via RS232, USB, USB Type C, or Ethernet, depending on the interchangeable connection module.

With the adoption of the Wireless Power Transfer technology, the base station can charge the battery of the gun without contacts, with a performance depending on the power supply type used.

The label on the base station has LED indicators and a touch button. Touch the button for 2 seconds and all properly configured and switched on scanners (with battery profile different from Max Autonomy) that are linked to that base station and within the radio range coverage, will emit a beep and blink within 5 seconds. This feature is useful to:

- verify which scanners are linked to a particular base station;
- detect a scanner forgotten somewhere.

The LEDs signal the BC9600 status, as explained below.

LED	STATUS	
Green LED	Solid green: the base station is powered. Blinking: the base station is receiving data	
Lateral Light Bands	Indicates the state of the battery charge. Orange slow blinking: battery level is under 50%, the reader is charging. Green slow blinking: battery level is over 50%, the reader is charging. Solid Green: the battery of the reader is fully charged	
Ethernet (Ethernet models only)	BF LED (red/green): network status; LINK LED (yellow/green): link activity; SF LED (red/green): module status; PWR LED (green): power ON (located on the connection module this LED is not visible when installed in the cradle).	

BASE STATION MODELS

Each base station is composed of a cradle which must be connected to a connection module, depending on the interface desired and on the IP (water and dust) protection grade.

The base station and connection module models are listed below.

Base Station Models

BC9600-433	BASE/CHARGER 433MHZ w/o conn. module
BC9600-910	BASE/CHARGER 910MHZ w/o conn. module
BC9630-433	BASE/CHARGER 433MHZ M-INT
BC9630-910	BASE/CHARGER 910MHZ M-INT
BC9631-433	BASE/CHARGER 433MHZ M-INT IP65
BC9631-910	BASE/CHARGER 910MHZ M-INT IP65
BC9680-433	BASE/CHARGER 433MHZ ETH/PROFINET
BC9680-910	BASE/CHARGER 910MHZ ETH/PROFINET
BC9681-433-N100	BASE/CHARGER 433 ETH/PROFINET IP65
BC9681-433-N200	BASE/CHARGER 433 ETH/ETH IP IP65
BC9681-910-N100	BASE/CHARGER 910 ETH/PROFINET IP65
BC9681-910-N200	BASE/CHARGER 910 ETH/ETH/IP IP65
BC9600-BT	BASE/CHARGER BT NO-INT w/o conn. module
BC9630-BT	BASE/CHARGER BT M-INT
BC9631-BT	BASE/CHARGER BT M-INT IP65
BC9680-BT	BASE/CHARGER BT ETH/PROFINET
BC9681-BT-N100	BASE/CHARGER BT ETH/PROFINET IP65
BC9681-BT-N200	BASE/CHARGER BT ETH/ETH/IP IP65
BC9620-433	BASE/CHARGER 433MHZ USB ONLY
BC9620-910	BASE/CHARGER 910MHZ USB ONLY
BC9620-BT	BASE/CHARGER BT USB ONLY

Connection Module Models

CM9630	CONN MOD M-INT
CM9631	CONN MOD M-INT IP65
CM9680	CONN MOD ETH PROFINET
CM9681-N100	CONN MOD ETH/PROFINET IP65
CM9681-N200	CONN MOD ETH/ETH/IP IP65

MOUNTING INSTRUCTIONS

The base station can be either set on or mounted to a flat surface for desktop usage, or affixed vertically to a wall. Depending on the model, the appropriate connection module is already installed.

Permanent Mounting

For either desktop or wall mounting, the base station can be fastened directly to a flat surface using screws (not included).

NOTE: When the base station is mounted on vertical surfaces, permanent mounting is always required.

NOTE: For vertical installation, do not exceed two meters in height.

NOTE: When mounting on drywall, the base station should be screwed to a wall stud or supporting beam for additional support.

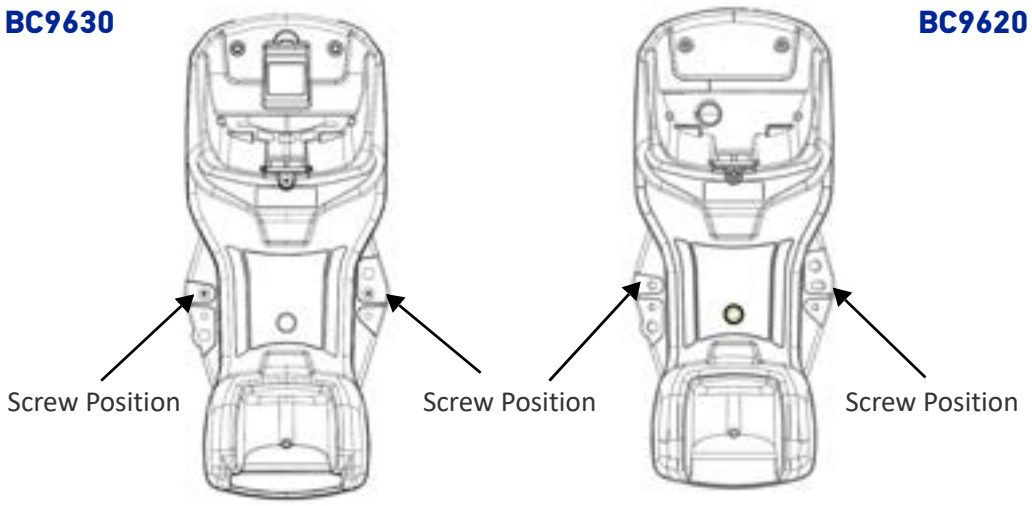

Wall Mounting

The base station contains a reversible positioning tab for horizontal or vertical mounting.

Figure 3 - Positioning Tab

Desktop Positioning Tab (Horizontal) **Wall Positioning Tab (Vertical)**

When shipped, the base station has the positioning tab installed in the Desktop position (horizontal). For vertical installation, the positioning tab must be rotated.

Changing the Orientation of the Positioning Tab:

1. Remove the screw holding the tab in place. Keep the screw for reuse.

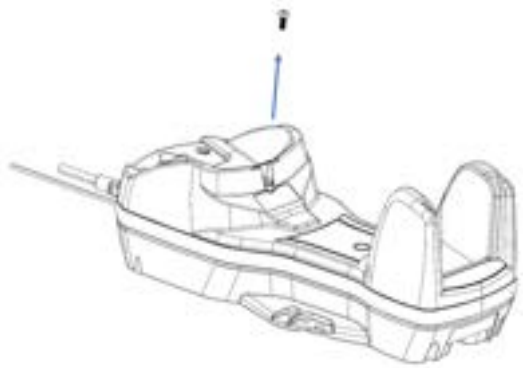

2. Carefully lift the tab out.

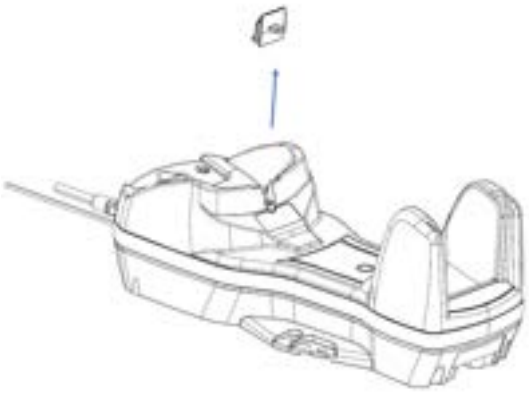

3. Rotate the tab until you will see "WALL" tooth, put the rotated tab into place and secure it with the screw.

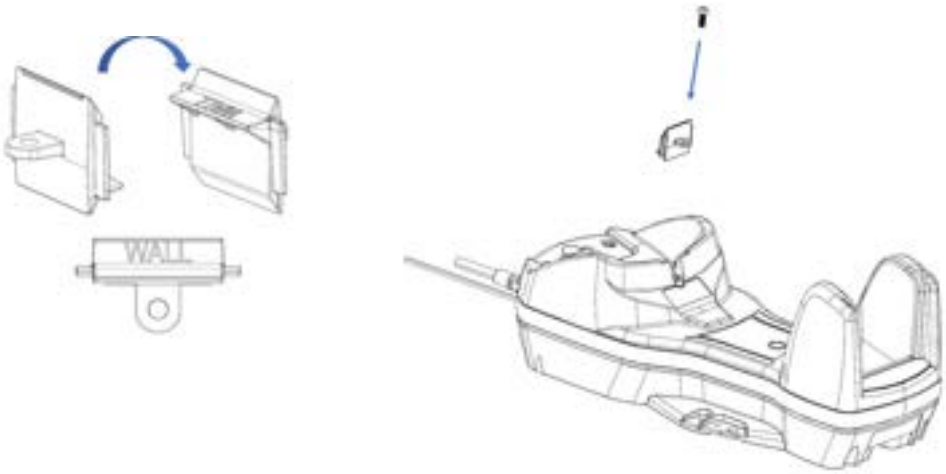

Portable Desktop Mounting

For desktop mounting, if portability of the base station is required, the mounting plate can be used. There are two ways this can be done: (1) base station fast release by first fixing the mounting plate onto a flat surface so the base station can be slid off and on, or (2) connection module fast release by fixing the mounting plate to the connection module and then fixing both of them onto a flat surface so only the cradle can be slid off while the connection module will remain on the desk.

Base Station Fast Release - Mounting the Plate

1. Affix the mounting plate onto the desired mounting surface using four screws through the holes highlighted in the figure below.

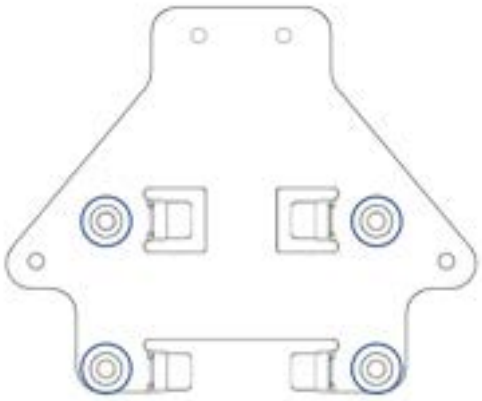

2. Remove the adhesive strips protecting the mounting tabs on the base station.

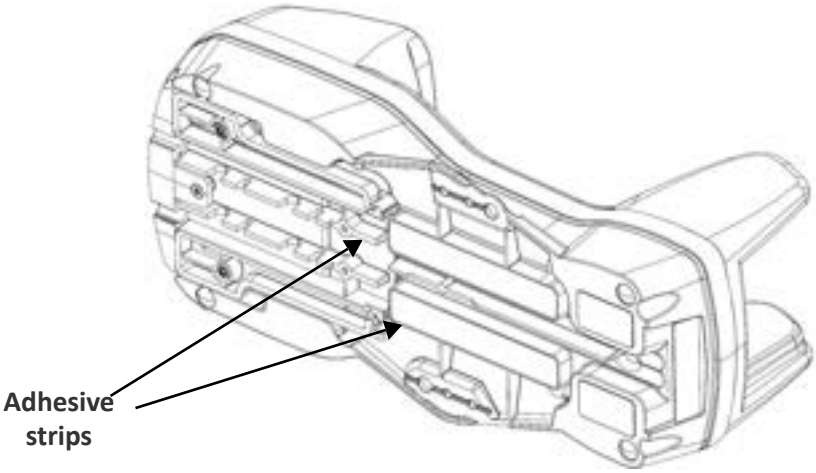

3. Align the base station with the mounting plate until you see the sphere inside the bigger hole on the left.

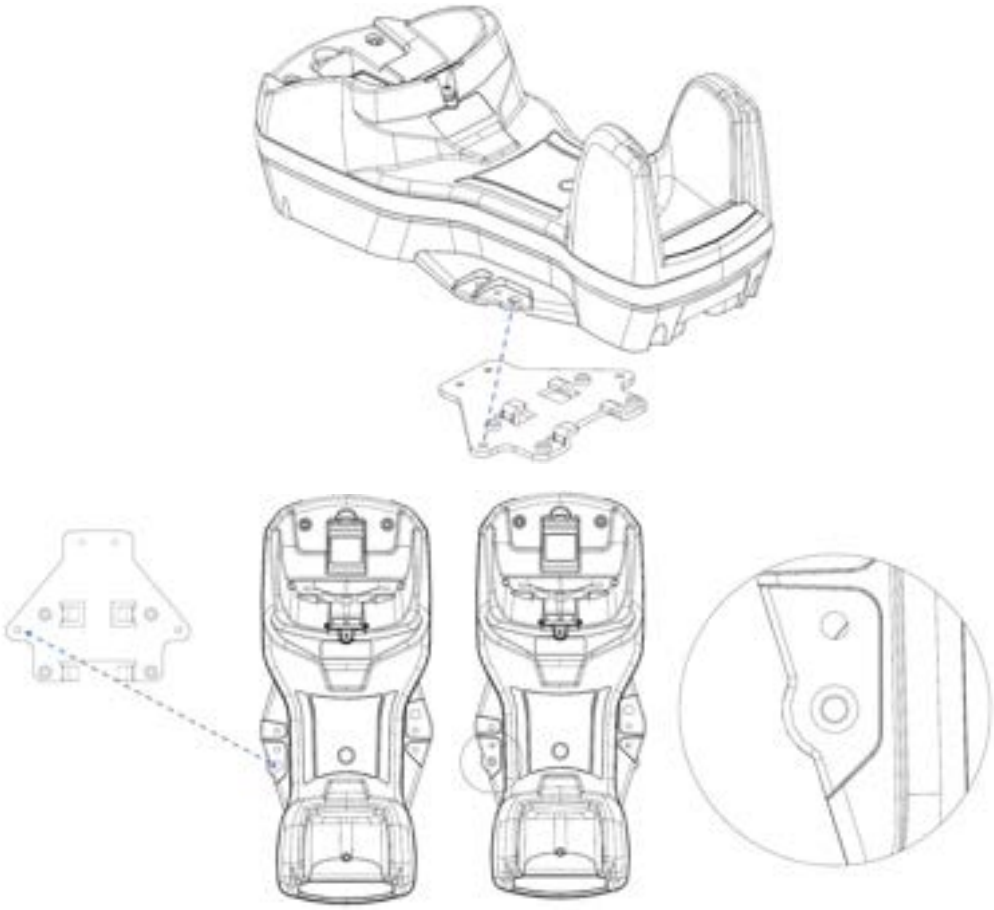

4. Move the base station down until the sphere is aligned with the smaller hole.

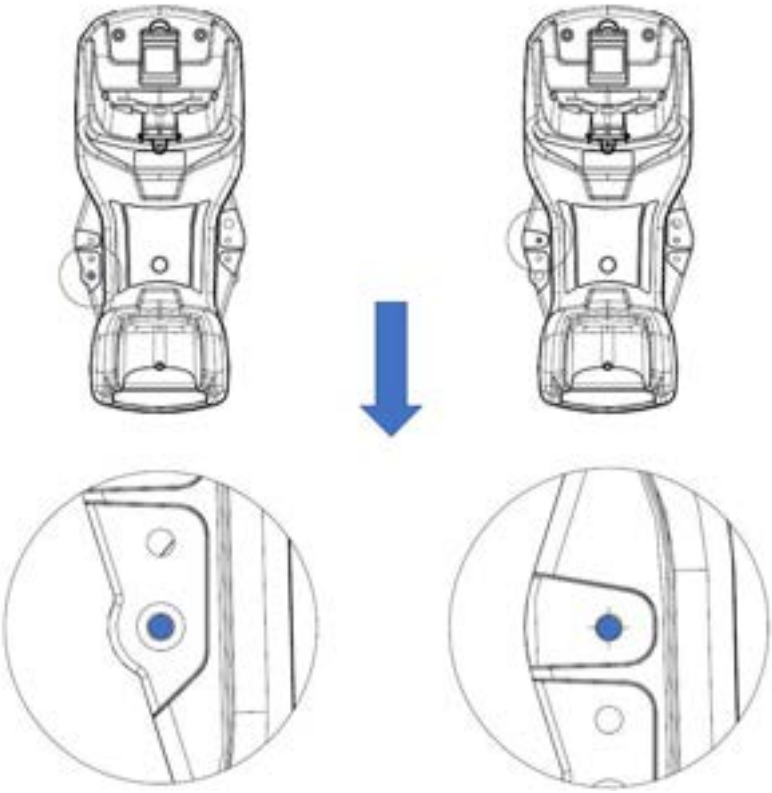

CONNECTION MODULE FAST RELEASE - MOUNTING THE BRACKET (NOT VALID FOR BC9620 MODELS)

1. Remove the protective strips.
2. Unscrew the connection module from the base station.
3. Screw the mounting plate to the connection module.

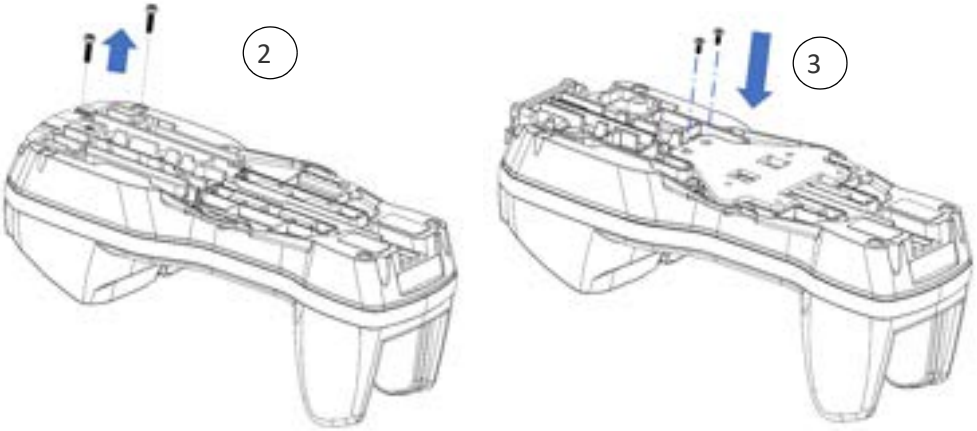

4. Unlock the lever and remove the connection module from the base station.

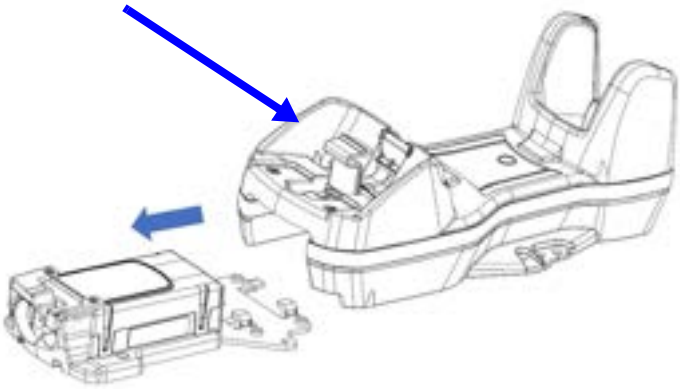

5. Screw the connection module and mounting plate sub-assembly to a flat surface using four screws as shown in the figure below.

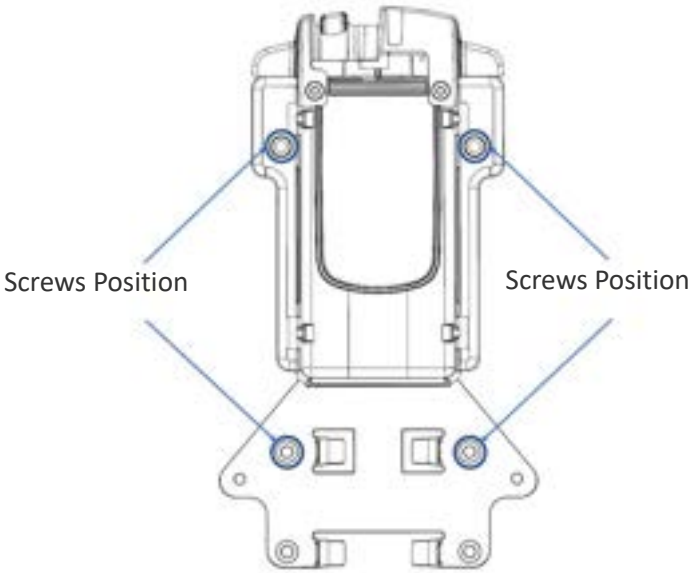

6. With the lever still unlocked, align the base station with the connection module until you see the sphere inside the bigger hole on the right.

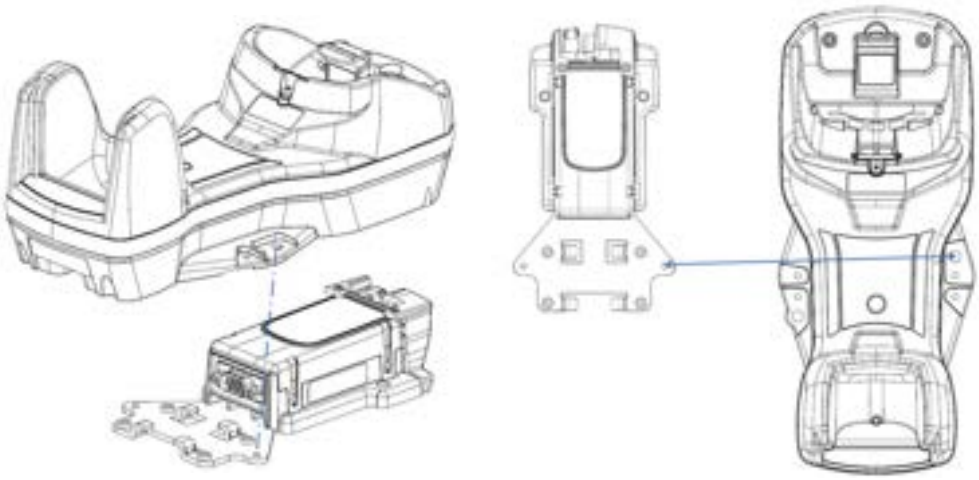

7. Move the base station up until the sphere is aligned with the smaller hole, then lock the lever to secure the connection module.

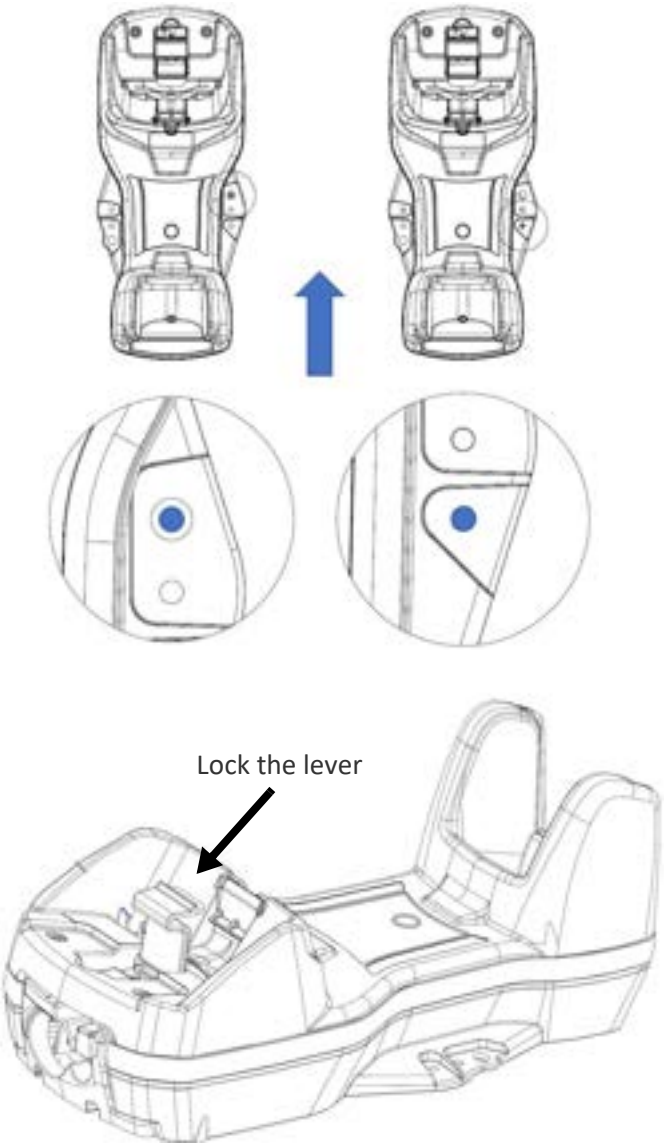
Lock the lever

SYSTEM CONNECTIONS

CAUTION: Connections should always be made with power off.

The BC9620 and BC9630 (BC9600 + CM9630 connection module) provide a multi-interface connector (BC9630) / USB cable (BC9620) for connections to a host and a power supply connector for an external power supply.

To unlock the USB cable of BC9620, push the button shown in the picture and extract the cable.

To unlock the multi-interface cable of BC9630, first lift the lever and then extract the cable, as indicated by the label next to the lever.

Figure 4 - BC9620 connection module

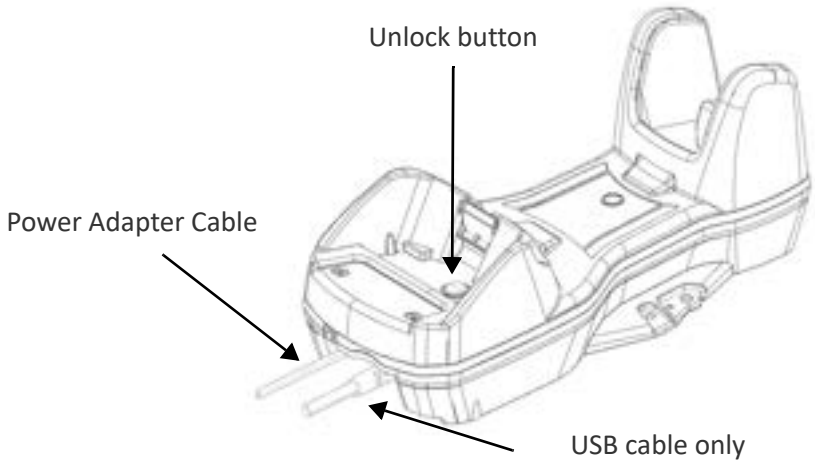

Figure 5 - BC9630 Connection Module

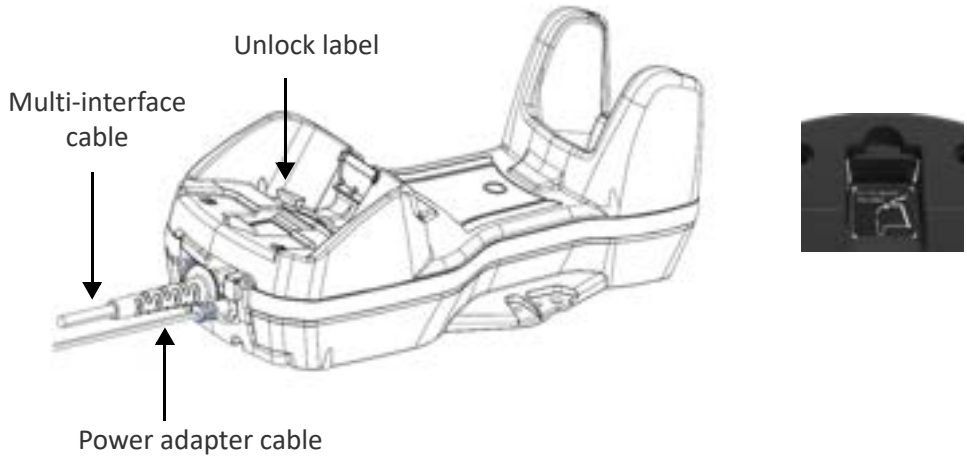

The BC9631 (BC9600 + CM9631 connection module) provides a single multi-interface connector. Power is supplied by the host (USB) or by an external power supply connected to the cable.

Figure 6 - BC9631 Connection Module

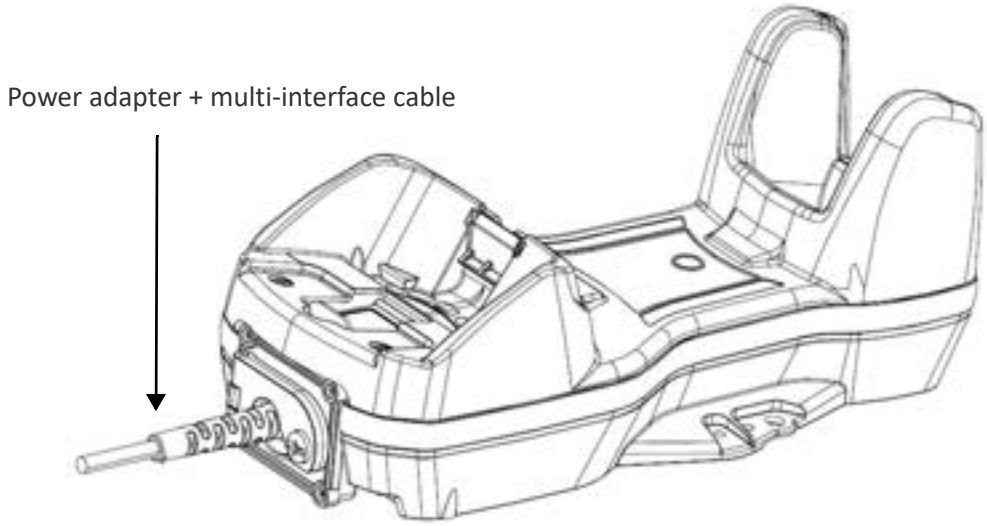

CONNECTING AND DISCONNECTING THE CABLES

The BC963X cradle can be connected to a host by means of a multi-interface cable, which must be simply plugged into the Host connector, visible on the front panel of the cradle. To disconnect the multi-interface cable and the power adapter cable (for BC9630), refer to the following figures.

CAUTION: Connections should always be made with power off.

Connecting BC9630 Cables

Connect the multi-interface cable first, then connect the power adapter cable. Finally, power on the cradle.

Figure 7 - Connecting BC9630 cables

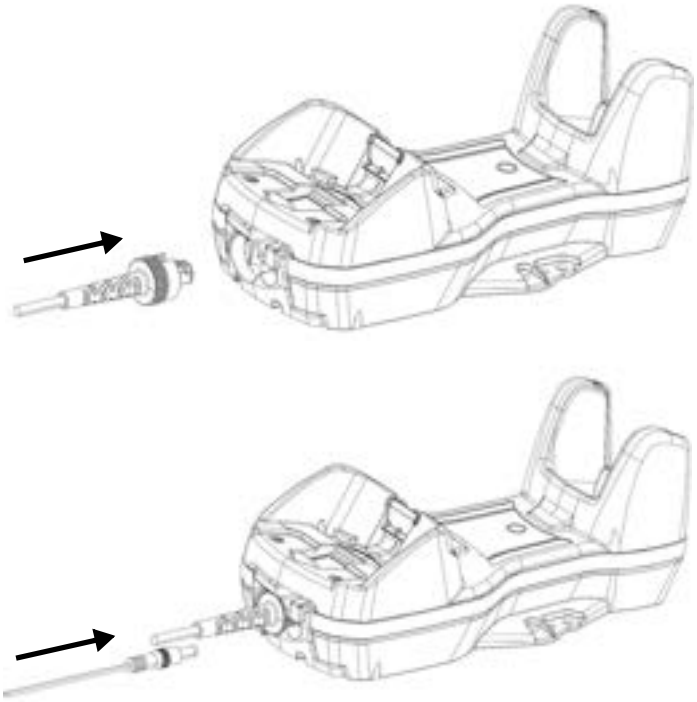

After connecting the power supply cable, secure it on the strain relief as shown in the figure below.

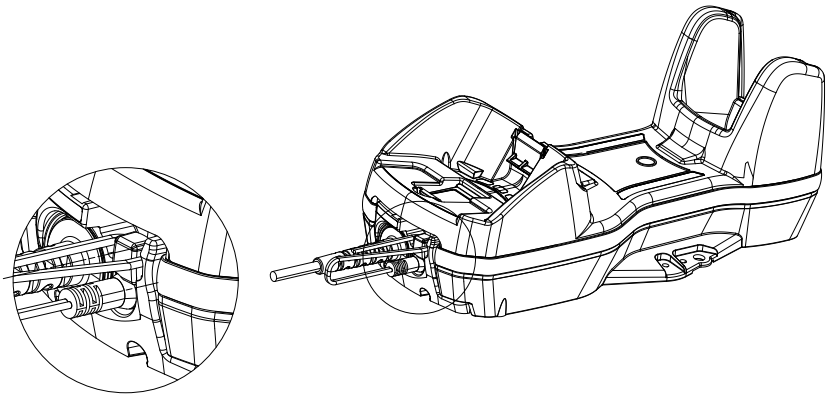

Disconnecting BC9630 Cables

To disconnect the cables, power off the base station, unlock the lever and press down the cable clip using a pen or a similar tool.

1. Power off the cradle and unlock the lever

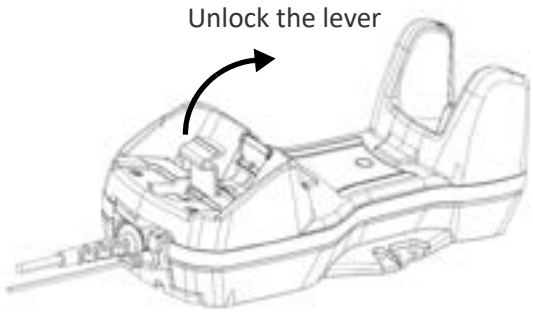

2. Press down the cable clip using a pen or a similar tool.

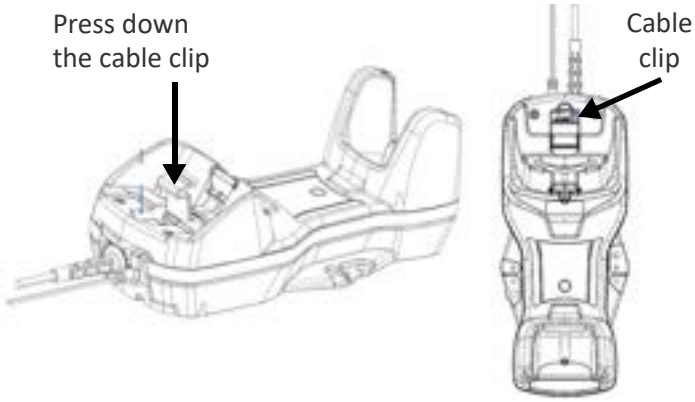

3. Pull out the multi-interface cable and put the lever back into lock position.

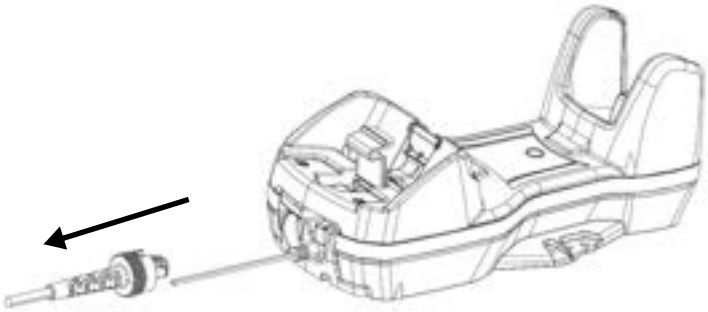

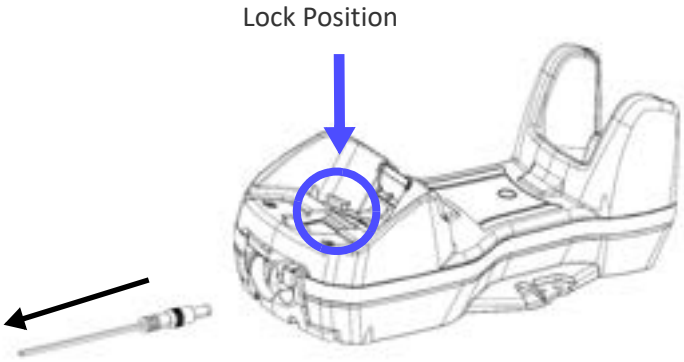

Connecting BC9631 Multi-interface Cable

1. Unscrew the no-tool screw to open the front door.

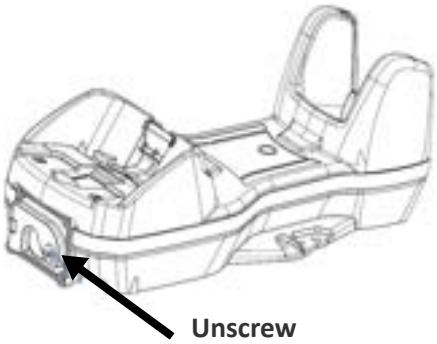

2. Insert the multi-interface cable.

3. Close the door and screw it back.

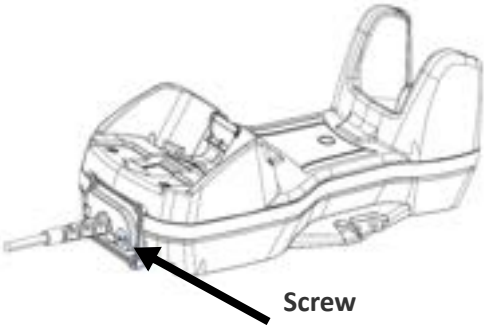

To disconnect the multi-interface cable, open the front door, pull out the cable and screw the front door back.

Disconnecting BC9620 Cables

To disconnect the cables, power off the base station, push the button and pull out the cables.

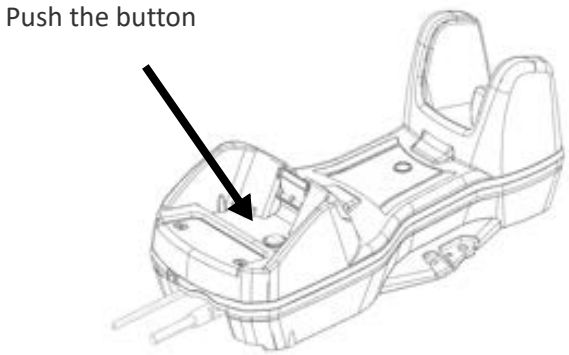

Connecting BC9680 cables

Connect the Ethernet cable and then connect the power adapter cable. Finally, power on the cradle and lock the power cable on the strain relief.

To disconnect the cables, first unlock the power cable and then pull it out. To disconnect the Ethernet cable, use a flat screwdriver to unlock the Ethernet clip.

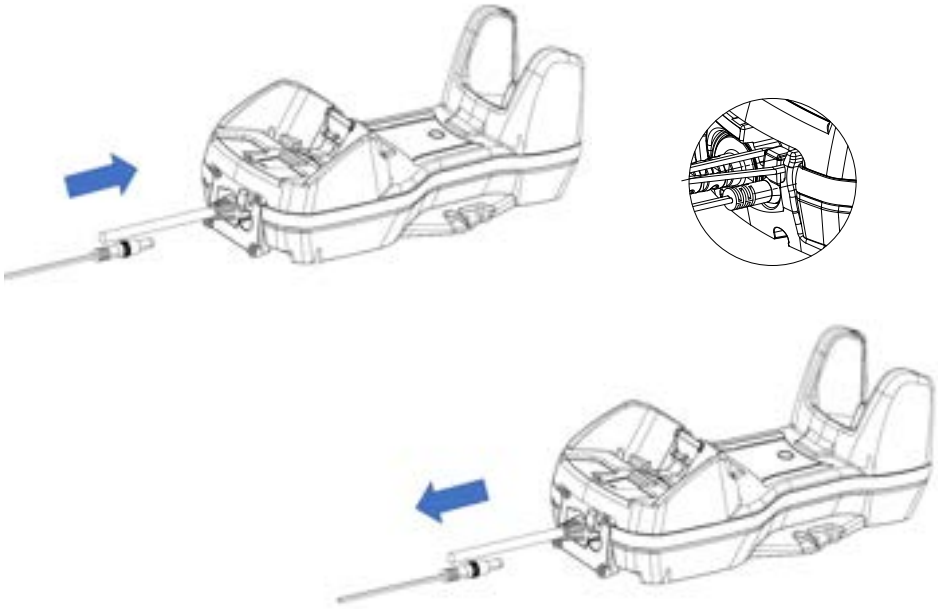

Connecting BC9681 cables

Screw the cables on the base. Then power on the cradle.

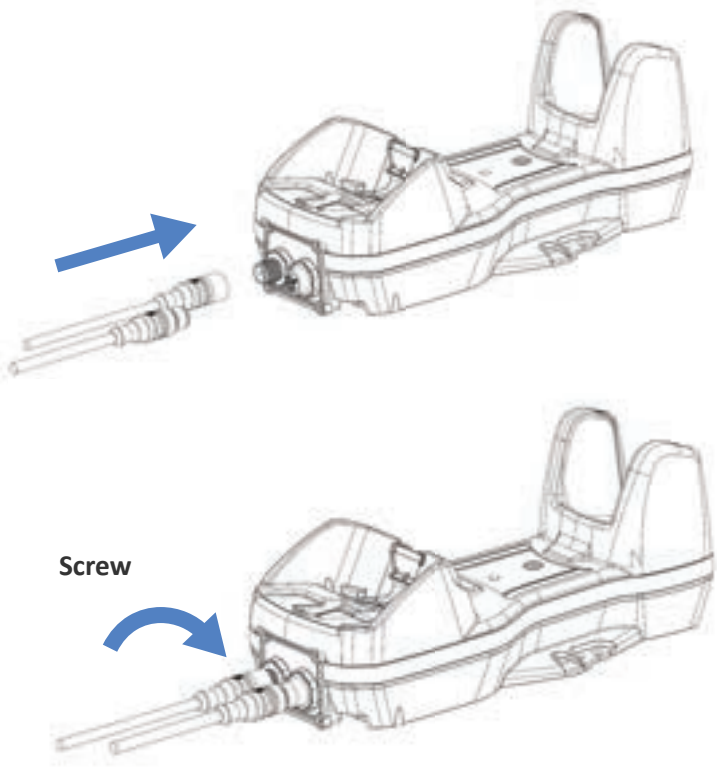

CAUTION: Do not place two base stations too close to each other as shown in the figure below. Keep at least 5cm of distance between them, in order to avoid possible interferences and malfunction of the two wireless charging systems.

CONNECTING THE BASE STATION

The BC9600 can be connected to a terminal, PC or other host device by means of a multi-interface cable or via Ethernet. The following figures show how to connect the cradle to the host device. Turn off the host before connection and consult the manual for that equipment (if necessary) before proceeding. Connect the interface cable before applying power to the cradle.

RS232

BC9630 only

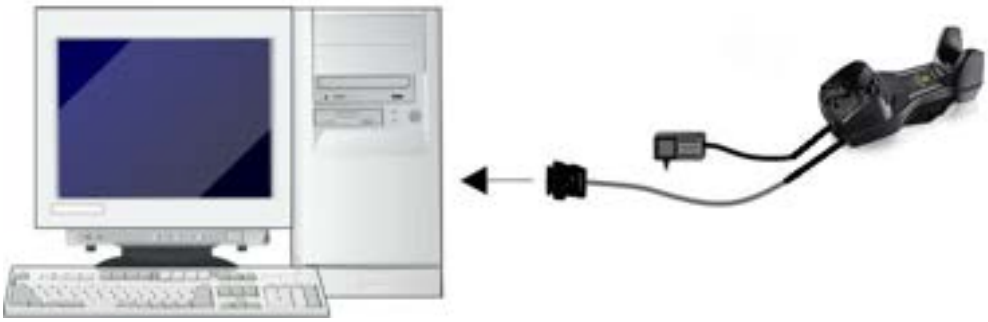

BC9631 only

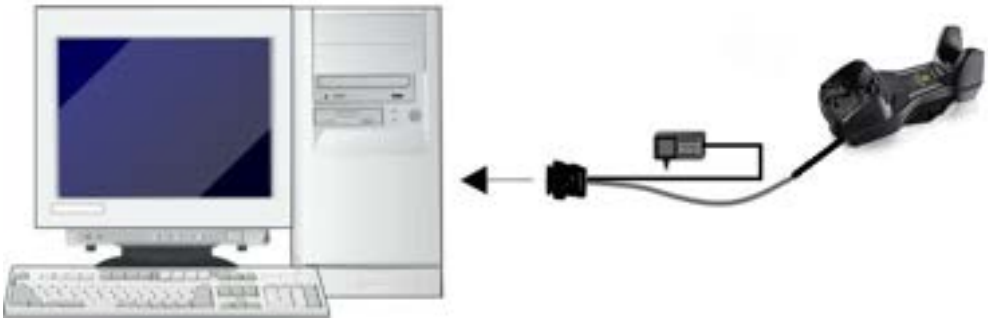

USB

The power supply is optional, the cradle can be powered by the USB port. In this case, the full charging of an empty battery will take about 16 hours with USB and 6,5 hours with USB type C at ambient temperature. For intense usage and/or when the system is shut down during the night, the use of an external power supply is recommended.

BC9620 & BC9630

BC9620 & BC9631

ETHERNET

BC9680

ETHERNET

BC9681 with POE connection

ETHERNET

BC9681 with external power supply

Brown: +10/30 VDC

Blue: GND

Black: Not used

For the pinout and the list of compatible cables refer to the information about CM9680/CM9681 at page 11.

NOTE: When using the BC9680/CM9681 cradles, apply the ferrite provided with the device to the Ethernet cable 5 cm from the cradle. See the example below.

Figure 8How to mount a ferrite

SYSTEM AND NETWORK LAYOUTS

Stand Alone Layouts

Figure 9 - Single Reader Layout

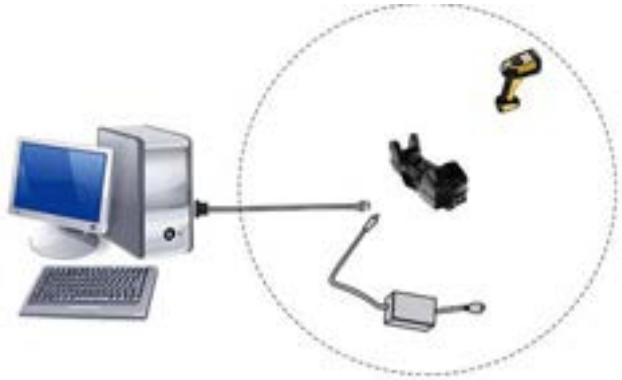

Figure 10 - Multiple Reader Layout

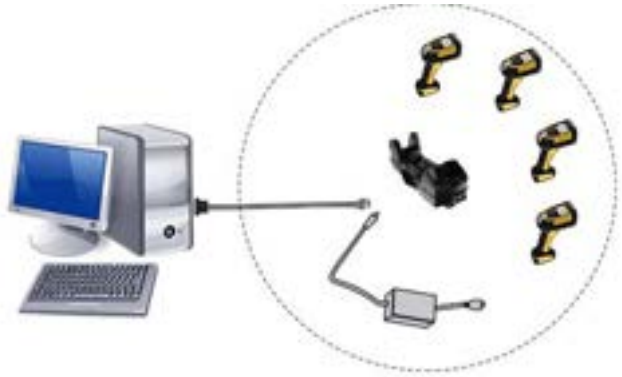

In stand alone systems, each base station is connected to a single Host.

Figure 11 - Multiple Stand Alone Layouts

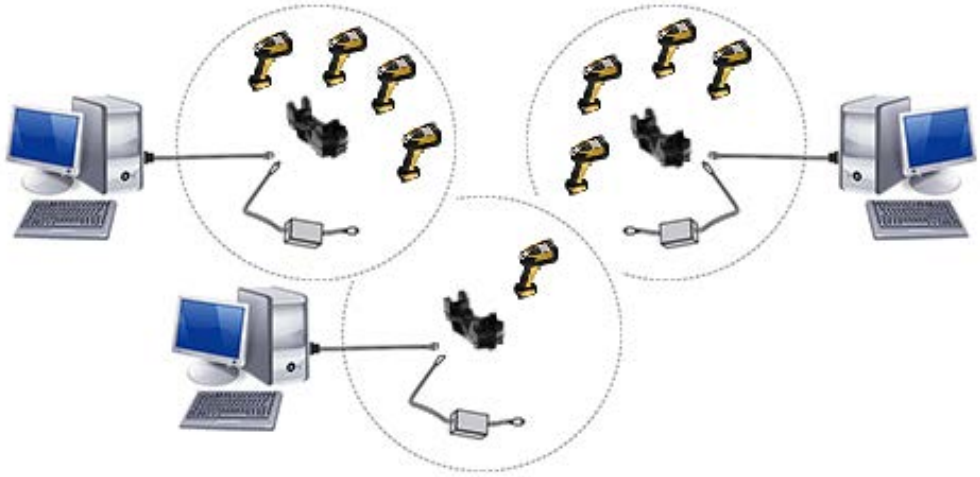

Many stand alone connections can operate in the same physical area without interference, provided all readers and base stations in the system have different addresses.

BC9600 CONFIGURATION

The BC9600 configuration can be performed in three ways: by using the Datalogic Aladdin™ software configuration program, by sending configuration strings from the Host PC via the RS-232, USB-COM or Ethernet interface or by reading configuration bar codes with the PowerScan 9600 reader.

Serial Configuration

By connecting the BC9600 to a PC through an RS-232 or USB-COM interface cable it is possible to send configuration strings from the PC to BC9600.

Configuration Bar Codes

Link the cradle and the reader using the procedures described in the PowerScan PBT/PM9600 Quick Reference. Once the pairing is complete, you can configure the BC9600 cradle by reading configuration bar codes in this manual.

To configure the BC9600 using the PowerScan 9600 reader (paired to the cradle with the Bind command), follow the procedure according to the interface selected.

INTERFACE SELECTION

Upon completing the physical connection between the reader and its host, proceed directly to the following paragraph "Configuring the Interface" for information and programming for the interface type the reader is connected to (for example: RS-232, USB, etc.) and scan the appropriate bar code in that section to select your system’s correct interface type.

The reader, depending upon the model, will support one of the following sets of host interfaces:

- USB (Keyboard, COM, OEM)
- USB Composite (Keyboard + COM)
- USB HID POS
- USB Toshiba TEC
- RS-232 STD
- RS-232 WN
- RS232 OPOS
- Datalogic Magellan Scanners' specific interface
- Ethernet

CONFIGURING THE INTERFACE

Scan the programming bar code from the following section which selects the appropriate interface type to match the system the reader will be connected to. Next, proceed to the corresponding chapter in this manual (also listed in the table) to configure any desired settings and features associated with that interface.

NOTE: Unlike some other programming features and options, interface selections require that you scan only one programming bar code label. DO NOT scan an ENTER/EXIT bar code prior to scanning an interface selection bar code. Some interfaces require the reader to start in the disabled state when powered up. If additional reader configuration is desired while in this state, pull the trigger and hold for 5 seconds. The reader will change to a state that allows programming with bar codes.

Table 3 - Available Interfaces

USB-OEM	
Select USB-OEM	USB-OEM (can be used for OPOS/UPOS/JavaPOS)

NOTE: If you erroneously read the USB-OEM interface selection code, it is required to press and hold the trigger to unlock the reader. Then read the correct interface bar code. This will work only at power-up. Please reconnect the reader if the unlock is not successful.

Table 4 - Available Interfaces (continued)

SERIAL INTERFACE	
RS-232 standard interface **Not supported on USB only models*	Select RS232-STD
Select RS232-WN	RS-232 Wincor-Nixdorf
RS-232 for use with OPOS/UPOS/JavaPOS	Select RS-232 OPOS
Select USB-COM-STD[a]	USB-COM (simulates RS-232 standard interface)

a. Download the correct USB Com driver from www.datalogic.com.

USB FOR TERMINALS	
USB Toshiba TEC	Select USB Toshiba TEC
Select USB HID POS	USB HID POS

USB FOR MAGELLAN SCANNERS	
USB for Magellans	Select USB Magellan Scanners

ETHERNET	
Select Ethernet Interface	Ethernet Interface

KEYBOARD	
USB Keyboard with standard key encoding	Select USB Keyboard
Select USB Alternative Keyboard	USB Keyboard with alternative key encoding
USB-Composite Combines USB-KBD emulation and USB-COM	Select USB-Composite

CUSTOMIZING CONFIGURATION SETTINGS

Using the Programming Bar Codes

This manual contains feature descriptions and bar codes which allow you to reconfigure your reader. Some programming bar code labels, like Resetting the Product Configuration to Defaults, starting on page 43, require only the scan of that single label to enact the change.

Most of the programming labels in this manual, however, require the reader to be placed in Programming Mode prior to scanning them. Scan an ENTER/EXIT bar code once to enter Programming Mode. Once the reader is in Programming Mode, you can scan a number of parameter settings before scanning the ENTER/EXIT bar code a second time, which will then accept your changes, exit Programming Mode and return the reader to normal operation.

NOTE: There are some exceptions to the typical programming sequence described above. Please read the description and setting instructions carefully when configuring each given programmable feature.

Datalogic Aladdin™ Utility

Programming can alternatively be performed using the Datalogic Aladdin™ Configuration application which is available for free download from the Datalogic website listed on the back cover of this manual. This multi-platform utility program allows device configuration using a PC. It communicates to the device using a serial or USB cable and can also create configuration bar codes to print.

Datalogic Aladdin™ is a multi-platform utility program providing a quick and user-friendly configuration method via the RS-232/USB-COM/Ethernet interface. The Aladdin utility is available on the Datalogic website. Aladdin allows you to program the reader by selecting configuration commands through a user-friendly graphical interface running on a PC. These commands are sent to the reader over the selected communication interface, or they can be printed as bar codes to be scanned.

Aladdin also provides the ability to perform a software upgrade for the connected device (see the Datalogic Aladdin™ Help On-Line for more details).

Interface Settings

The reader is typically factory-configured with a set of default features standard to the interface type you ordered. See Appendix C, Standard Defaults.

Global Interface Features, starting on page 46 provides settings configurable by all interface types. If your installation requires you to further customize your reader, you can select other options through use of the instructions and programming bar codes available in the appropriate section for your interface.

- "RS-232 Interface" on page 47
- "RS-232/USB-COM Interfaces" on page 53
- RS232 OPOS on page 39
- USB Composite (COM + Keyboard) on page 41
- "Keyboard Interface" on page 61
- "USB-OEM Interface" on page 88

Configuring Other Features

If your installation requires different programming than the standard factory default settings, the following sections of this manual allow configuration of non-interface-specific settings you might require:

Configuration Using Bar Codes: General Features includes programming for scanning, beeper and LED indicators and other such universal settings.

Reading Parameters: Reading Parameters include programming for scanning, beeper and LED indicators and other universal settings.

1D Symbologies: Includes options concerning the bar code label types (symbologies). These settings allow you to enable/disable symbologies, set label lengths, require check digit, etc.

Software Version Transmission

The software version of the device (reader or base station) can be transmitted over the RS-232, Keyboard and USB interfaces by scanning the following labels.

Transmit Software Version (reader)

Transmit Software Version (base station)

Resetting the Product Configuration to Defaults

Restore Custom Default Configuration

If you aren't sure what programming options are in your reader, or you've changed some options and want to restore the Custom Default Configuration that may have been saved in the reader, scan the Restore Custom Default Configuration bar code below. This will restore the custom configuration for the currently active interface.

NOTE: Custom defaults are based on the interface type. Configure the reader for the correct interface before scanning this label.

Restore Custom Default Configuration

CHAPTER 3
CONFIGURATION WITH BAR CODES

This and following sections provide programming bar codes to configure your reader by changing the default settings. For details about additional methods of programming, see "Customizing Configuration Settings" on page 42.

NOTE: You must first enable your PowerScan to read bar codes in order to use this section. If you have not done this, go to Setup, starting on page 7 **and complete the appropriate procedure.**

CONFIGURATION PARAMETERS

Once the reader is set up, you can change the default parameters to meet your application needs. Refer to Standard Defaults, starting on page 377 for initial configuration in order to set the default values and select the interface for your application.

NOTE: In the following sections, text shown with a green star indicates a factory default value.

★This is an example of a default value.

The following configuration parameters are divided into logical groups, making it easy to find the desired function based on its reference group.

Interface Configuration:

- RS-232 Standard Settings, starting on page 48
- RS-232/USB-COM Settings, starting on page 54
- Keyboard Interface, starting on page 61
- USB-OEM Interface, starting on page 88
- ETHERNET Interface, starting on page 90

Parameters Common to all Interface Applications:

- Global Interface Features, starting on page 46.
- Data Format, starting on page 103 gives options to control the messages sent to the Host system by selecting parameters to control the message strings sent to the handheld (e.g. "Global Prefix/Suffix" on page 104).
- Reading Parameters, starting on page 116 controls various operating modes and indicators status functioning.

Symbology-specific parameters:

1D Symbologies, starting on page 140 and 2D Symbologies, starting on page 229 define options for all symbologies and provides the programming bar codes necessary for configuring these features.

NOTE: You must first enable your reader to read bar codes in order to use this section. If you have not done this, go to Setup, starting on page 7 **and complete the appropriate procedure.**

To program features:

1. Scan the ENTER/EXIT PROGRAMMING bar code, available at the top of each programming page, when applicable.
2. Scan the bar code to set the desired programming feature. You may need to cover unused bar codes on the page, and possibly the facing page, to ensure that the reader reads only the bar code you intend to scan.
3. If additional input parameters are needed, go to Appendix G, and scan the appropriate characters from the keypad.

NOTE: Additional information about many features can be found in the References, starting on page 328**.**

If you make a mistake before the last character, scan the CANCEL bar code to abort and not save the entry string. You can then start again from the beginning.

4. Complete the programming sequence by scanning the ENTER/EXIT PROGRAMMING bar code to exit Programming Mode.

For more detailed descriptions, programming information and examples for setting selected configuration items, see References, starting on page 328.

GLOBAL INTERFACE FEATURES

The following interface features are configurable by all interface types.

To set features specific to your interface, turn to that section of this manual.

Host Commands — Obey/Ignore

This option specifies whether the reader will obey or ignore host commands. See list of available host command characters in Appendix E. When set to ignore, the reader will ignore all host commands except those necessary for:

- service mode
- flash programming mode
- keeping the interface active
- transmission of labels.

★Host Commands = Obey
(Do Not Ignore Host Commands)

Host Commands = Ignore

USB Suspend Mode

This setting enables/disables the ability of USB interfaces to enter suspend mode.

USB Suspend Mode = Disable

★USB Suspend Mode = Enable

CONFIGURATION | RS-232 INTERFACE

Use the programming bar codes in this chapter if modifications to the standard RS-232 interface settings are necessary to meet your system's requirements. Additional settings which apply to both the RS-232 and USB interfaces are available in RS-232/USB-COM Settings, starting on page 54.

SECTION CONTENTS

RS-232 STANDARD SETTINGS starting on page 48

- Baud Rate
- Data Bits
- Stop Bits
- Parity
- Handshaking Control

Standard Factory Settings

Reference Appendix C, for a listing of standard factory settings.

RS-232 STANDARD SETTINGS

Baud Rate

Baud rate is the number of bits of data transmitted per second. Set the reader's baud rate to match the baud rate setting of the host device. With an improper baud rate setting, data may not reach the host correctly.

Baud Rate = 1200

Baud Rate = 2400

Baud Rate = 4800

Baud Rate = 9600

Baud Rate = 19,200

Baud Rate = 38,400

Baud Rate = 57,600

★Baud Rate = 115,200

Data Bits

This parameter allows the reader to interface with devices requiring a 7-bit or 8-bit ASCII protocol for sending and receiving data.

7 Data Bits

★8 Data Bits

NOTE: Handheld and base station models support the 8-bit ASCII protocol. The 7-bit ASCII protocol support is subject to specific firmware release. If the setting is not supported, the reader will emit three short beeps upon scanning the label.

Stop Bits

The stop bit(s) at the end of each transmitted character marks the end of transmission of one character and prepares the receiving device for the next character in the serial data stream. The number of stop bits selected (one or two) depends on the number the receiving terminal is programmed to accommodate. Set the number of stop bits to match host device requirements.

★1 Stop Bit

2 Stop Bits

Parity

This feature specifies parity required for sending and receiving data. A parity check bit is the most significant bit of each ASCII coded character. Select the parity type according to host device requirements.

- Select None when no parity bit is required.
- Select Odd parity and the parity bit value is set to 0 or 1, based on data, to ensure that an odd number of 1 bits are contained in the coded character.
- Select Even parity and the parity bit value is set to 0 or 1, based on data, to ensure that an even number of 1 bits are contained in the coded character.

★Parity = None

Parity = Even

Parity = Odd

Handshaking Control

The data interface consists of an RS-232 port designed to operate either with or without the hardware handshaking lines, Request to Send (RTS), and Clear to Send (CTS). Handshaking Control includes the following options:

- RTS — RTS is asserted during transmissions. CTS is ignored.
- RTS/CTS — RTS is asserted during transmissions. CTS gates transmissions.
- RTS/XON/XOFF — RTS is asserted during transmissions. CTS is ignored. XON and XOFF gate transmissions.
- RTS On/CTS — RTS is always asserted. CTS gates transmissions.
- RTS/CTS Scan Control — RTS is asserted during transmissions. CTS gates transmissions and controls enable and disable state of reader.

★Handshaking Control = RTS

Handshaking Control = RTS/CTS

Handshaking Control = RTS/XON/XOFF

Handshaking Control = RTS On/CTS

Handshaking Control = RTS/CTS Scan Control

Handshaking Control = RTS Off

CONFIGURATION | RS-232/USB-COM INTERFACES

SECTION CONTENTS

- Intercharacter Delay
- Beep On ASCII BEL
- Beep On Not on File
- ACK NAK Options
- ACK Character
- NAK Character
- ACK NAK Timeout Value
- ACK NAK Retry Count
- ACK NAK Error Handling
- Indicate Transmission Failure
- Disable Character
- Enable Character

Standard Factory Settings

Reference Appendix C, for a listing of standard factory settings.

RS-232/USB-COM SETTINGS

Intercharacter Delay

This parameter specifies the intercharacter delay between the end of one character and the beginning of the next. The delay can be set within a range of zero (0) to 990 milliseconds in 10ms increments. A setting of zero specifies no delay. See "Intercharacter Delay" on page 330 for more detailed programming instructions.

Intercharacter Delay = No Delay

Select Intercharacter Delay Setting

To configure this feature, scan the ENTER/EXIT bar code above, then the bar code at left followed by digits from the Alphanumeric characters in Appendix G representing your desired character(s). End by scanning the ENTER/EXIT bar code again.

Make a mistake? Scan the CANCEL bar code to abort and not save the entry string. You can then start again at the beginning.

CANCEL

★00 = No Intercharacter Delay

Beep On ASCII BEL

When this parameter is enabled, the reader issues a beep when a <BEL> character is detected on the RS-232 serial line. <BEL> is issued to gain a user's attention to an illegal entry or other important event.

★Beep On ASCII BEL = Disable

Beep On ASCII BEL = Enable

Beep On Not on File

This option enables/disables the action of the reader to sound a three beep sequence upon receiving a Not-On-File (NOF) host command.

Beep On Not On File = Disable

★Beep On Not On File = Enable

ACK NAK Options

This enables/disables the ability of the reader to support the RS-232 ACK/NAK protocol. When configured, the reader and/or host sends an “ACK” when it receives data properly, and sends “NAK” when the data is in error.

Options are:

- Disable
- Enable for label transmission — The reader expects an ACK/NAK response from the host when a label is sent.
- Enable for host-command acknowledge — The reader will respond with ACK/NAK when the host sends a command.
- Enable for label transmission and host-command acknowledge

★ACK/NAK Protocol = Disable ACK/NAK

ACK/NAK Protocol = Enable for label transmission

ACK/NAK Protocol = Enable for host-command acknowledge

ACK/NAK Protocol = Enable for label transmission and host command acknowledge

ACK Character

This setting specifies an ASCII character or hex value to be used as the ACK character. ASCII characters or any hex value from 0 to 0xFF can be selected. See "ACK Character" on page 331 for more detailed programming instructions.

NOTE: Setting to previously defined characters such as XON, XOFF, or host commands conflicts with normal operation of these characters. 8-bit data is not recognized when the option "Data Bits" on page 49 has been set as 7 Data Bits.

Select ACK Character Setting

Make a mistake? Scan the CANCEL bar code to abort and not save the entry string. You can then start again at the beginning.

CANCEL

★0x06 'ACK' Character

NAK Character

This setting specifies an ASCII character or hex value to be used as the NAK character. ASCII characters or any hex value from 0 to 0xFF can be selected. See "NAK Character" on page 332 for more detailed programming instructions

NOTE: Setting to previously defined characters such as XON, XOFF, or host commands conflicts with normal operation of these characters. 8-bit data is not recognized when the option "Data Bits" on page 49 has been set as 7 Data Bits.

Select NAK Character Setting

Make a mistake? Scan the CANCEL bar code to abort and not save the entry string. You can then start again at the beginning.

CANCEL

★0x15 'NAK' Character

ACK NAK Timeout Value

This option specifies the amount of time the reader waits for an ACK character from the host following label transmission. The selectable timeout range is 200 milliseconds to 15,000ms (15 seconds) in 200ms increments. A selection of 0 disables the timeout. See "ACK NAK Timeout Value" on page 333 for more detailed programming instructions.

Select ACK NAK Timeout Value Setting

To configure this feature, scan the ENTER/EXIT bar code above, then the bar code at left followed by digits from the Alphanumeric characters in Appendix G representing your desired character(s). End by scanning the ENTER/EXIT bar code again.

Make a mistake? Scan the CANCEL bar code to abort and not save the entry string. You can then start again at the beginning.

CANCEL

★01 ACK NAK Timeout value is 200ms

ACK NAK Retry Count

This feature specifies the number of times the reader retries a label transmission due to a retry condition. The selectable range is from 1 to 254 retries. A selection of 0 disables the count, and a selection of 255 specifies unlimited retries. See "ACK NAK Retry Count" on page 334 for more detailed programming instructions.

Select ACK NAK Retry Count Setting

To configure this feature, scan the ENTER/EXIT bar code above, then the bar code at left followed by digits from the Alphanumeric characters in Appendix G representing your desired character(s). End by scanning the ENTER/EXIT bar code again.

Make a mistake? Scan the CANCEL bar code to abort and not save the entry string. You can then start again at the beginning.

CANCEL

★03 = 3 Retries

ACK NAK Error Handling

This feature specifies the method the reader uses to handle receive errors detected while waiting for an ACK character from the host.

Options are:

- Ignore errors detected
- Process error as valid ACK character
- Process error as valid NAK character

★ACK NAK Error Handling = Ignore Errors Detected

ACK NAK Error Handling = Process Error as Valid ACK Character

ACK NAK Error Handling = Process Error as Valid NAK Character

Indicate Transmission Failure

This option enables/disables the reader's ability to sound an error beep to indicate a transmission failure while in ACK/NAK mode.

Indicate Transmission Failure = Disable Indication

★Indicate Transmission Failure = Enable Indication

Disable Character

Specifies the value of the RS-232 host command used to disable the reader.

ASCII characters or any hex value from 0 to 0xFF can be selected. See "Disable Character" on page 335 for more detailed programming instructions.

Setting to previously defined characters such as XON, XOFF, or host commands conflicts with normal operation of these characters.

Select Disable Character Setting

Make a mistake? Scan the CANCEL bar code to abort and not save the entry string. You can then start again at the beginning.

CANCEL

★0x44 = Disable Character is 'D'

Enable Character

Specifies the value of the RS-232 host command used to enable the reader.

ASCII characters or any hex value from 0 to 0xFF can be selected. See "Enable Character" on page 336 for more detailed programming instructions

Setting to previously defined characters such as XON, XOFF, or host commands conflicts with normal operation of these characters.

Select Enable Character Setting

Make a mistake? Scan the CANCEL bar code to abort and not save the entry string. You can then start again at the beginning.

CANCEL

★0x45 = Enable Character is 'E'

CONFIGURATION | KEYBOARD INTERFACE

SECTION CONTENTS

COUNTRY MODE starting on page 62

- Setting Country Mode

OTHER KEYBOARD PARAMETERS starting on page 77

- Encoding Type
- ALT Output Type
- Keyboard Numeric Keypad
- Keyboard Send Control Characters
- Intercode Delay
- USB Keyboard Speed

Use the programming bar codes in this chapter to select options for USB Keyboard. Reference Appendix C, for a listing of standard factory settings. Information about control character emulation which applies to keyboard interfaces is listed in Appendix H, Scan-code Tables.

COUNTRY MODE

This feature specifies the country/language supported by the keyboard.

The Country Mode setting is ignored if the interface uses alternate key encoding.

SETUP ON PC TO USE ALT UNIVERSAL

1. Open Registry Edit

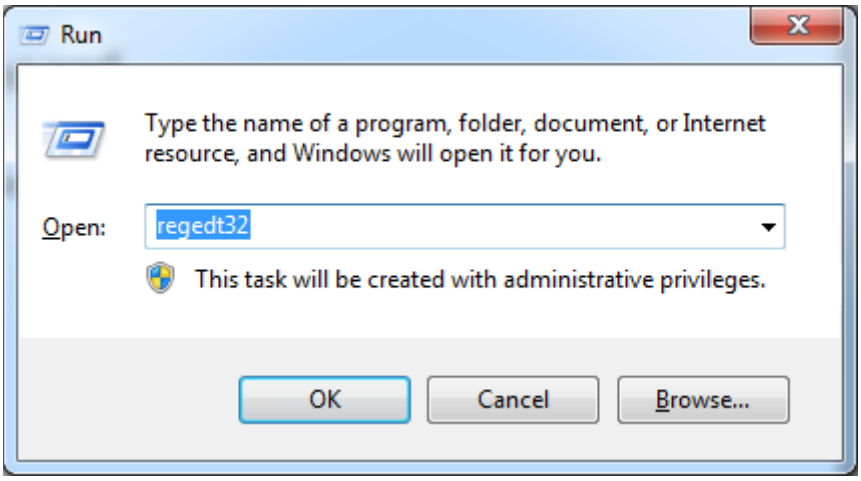

2. Set EnableHexNumpad to 1 as follows:

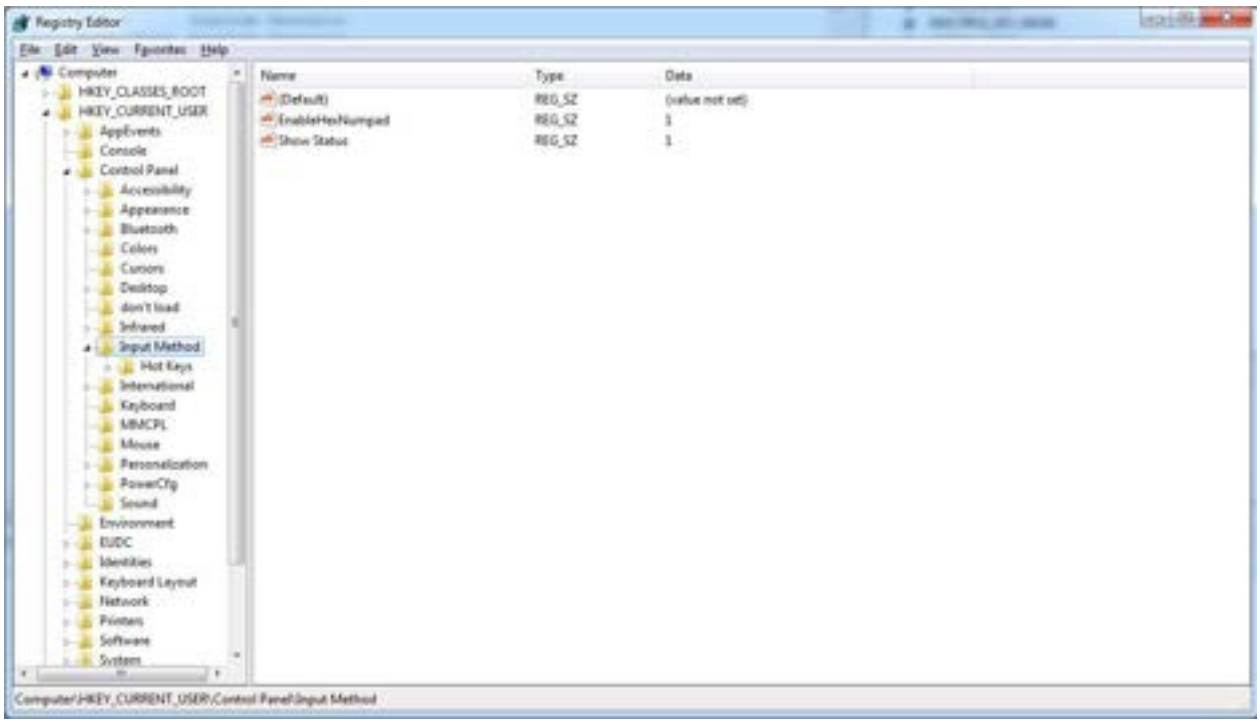

3. Reset the PC.

Setting Country Mode

★United States

French International (Belgian French)

United Kingdom

Danish

French (France)

German

Italian

Setting Country Mode (continued)

Norwegian

Portuguese (Portugal)

Spanish

Swedish

Swiss French

Japanese ASCII

Hungarian

Setting Country Mode (continued)

Czech

Slovak

Romanian

Croatian

Polish_214

French Canadian Win7

Lithuanian

Setting Country Mode (continued)

Vietnamese

Russian

Arabic 101

Chinese ASCII

Thai-Kedmanee

Albanian

Arabic 102

Setting Country Mode (continued)

Arabic 102 AZERTY

Azeri Cyrillic

Azeri Latin

Belarusian

Bosnian Cyrillic

Bosnian Latin

Bulgarian Cyrillic

Setting Country Mode (continued)

Bulgarian Latin

Canadian French (Legacy)

Canadian Multilingual

Chinese (Simplified)

Chinese (Traditional)

Czech Programmers

Czech QWERTY

Setting Country Mode (continued)

Dutch Netherlands

Estonian

Faeroese

Finnish

French (Canada) 2000/XP

French (Canada) 95/98

Galician

Setting Country Mode (continued)

Greek

Greek Latin

Greek Polytonic

Greek220

Greek220 Latin

Greek319

Greek319 Latin

Setting Country Mode (continued)

Hebrew Israel

Hungarian_101KEY

Icelandic

Irish

Italian_142

Japanese (Shift-JIS)

Kazakh

Setting Country Mode (continued)

Korean (Hangul)

Korean ASCII

Kyrgyz Cyrillic

Latin America

Latvian

Latvian QWERTY

Setting Country Mode (continued)

Macedonian -FYROM

Maltese_47KEY

Mongolian-Cyrillic

Polish Programmer

Portuguese Brazil

Portuguese Brazilian ABNT

Portuguese Brazilian ABNT2

Setting Country Mode (continued)

Romanian Legacy

Romanian Programmer

Romanian Standard

Russian Typewriter

Serbian Cyrillic

Serbian Latin

Slovak QWERTY

Setting Country Mode (continued)

Slovenian

Spanish Variation

Swiss German

Tatar

Turkish F

Turkish Q

Ukrainian

Setting Country Mode (continued)

US Dvorak

US Dvorak Left Hand

US Dvorak Right Hand

US English (Mac)

US English (North American)

US International

Uzbek Cyrillic

OTHER KEYBOARD PARAMETERS

Encoding Type

★Encoding Type = Don't Use Encoding

Encoding Type = UTF_8

Encoding Type = Windows 874

Encoding Type = Windows 932

Encoding Type = Windows 936

Encoding Type = Windows 949

Encoding Type = Windows 950

Encoding Type (continued)

Encoding Type = Windows 1250

Encoding Type = Windows 1251

Encoding Type = Windows 1252

Encoding Type = Windows 1253

Encoding Type = Windows 1254

Encoding Type = Windows 1255

Encoding Type = Windows 1256

Encoding Type (continued)

Encoding Type = Windows 1257

Encoding Type = Windows 1258

Encoding Type = Windows 20866

Encoding Type = Windows 54936

Encoding Type = ISO 8859-1

Encoding Type = ISO 8859-2

Encoding Type = ISO 8859-3

Encoding Type (continued)

Encoding Type = ISO 8859-4

Encoding Type = ISO 8859-5

Encoding Type = ISO 8859-6

Encoding Type = ISO 8859-7

Encoding Type = ISO 8859-8

Encoding Type = ISO 8859-9

Encoding Type = ISO 8859-10

Encoding Type (continued)

Encoding Type = ISO 8859-11

Encoding Type = ISO 8859-13

Encoding Type = ISO 8859-14

Encoding Type = ISO 8859-15

Encoding Type = ISO 8859-16

Encoding Type = MS-DOS 437

Encoding Type = MS-DOS 737

Encoding Type (continued)

Encoding Type = MS-DOS 775

Encoding Type = MS-DOS 850

Encoding Type = MS-DOS 852

Encoding Type = MS-DOS 855

Encoding Type = MS-DOS 857

Encoding Type = MS-DOS 860

Encoding Type = MS-DOS 861

Encoding Type (continued)

Encoding Type = MS-DOS 862

Encoding Type = MS-DOS 863

Encoding Type = MS-DOS 865

Encoding Type = MS-DOS 866

Encoding Type = MS-DOS 869

Encoding Type = Mac CP10000

ALT Output Type

This option specifies the encode type of ALT Mode when the reader sends Output Keyboard Data in Alt Mode. (Be aware that the reader may switch automatically between ALT mode & Normal Keyboard Scancode, to correctly display some characters that are not present in the current Keyboard Country).

ALT Output Type = ALT Codepage
(use on non Unicode application: Notepad)

★ALT Output Type = ALT Unicode
(use on Unicode application: Word)

ALT Output Type = ALT Universal
(Use for all)

ALT Output Type = ALT Unicode for Linux

Keyboard Numeric Keypad

This feature specifies if numeric characters will be sent using the standard keys or the numeric keypad.

★Keyboard Numeric Keypad = Standard Keys

Keyboard Numeric Keypad = Numeric Keypad

Keyboard Send Control Characters

This feature is used by USB Keyboard interfaces. It specifies how the reader transmits ASCII control characters to the host. Reference Appendix H Scancode Tables for more information about control characters.

Options are as follows:

Send Ctrl+Key : ASCII characters from 00H to 0x1FH inclusive are transmitted in the format Ctrl+Key. Special keys are available in the range from 81H to A1.

Send Ctrl+Shift+Key : The behavior is the same as above, but control keys are sent in the format Ctrl+Shift+Keys.

Send Special Function Key : Send characters between 00H and 1FH according to the special function key mapping table (see "Interface Type USB-Keyboard Alt Mode" on page 409). This is used to send keys that are not in the normal ASCII set. A unique set is provided for each available scancode set.

★Keyboard Send Control Characters = Send Ctrl+Key

Keyboard Send Control Characters = Send Ctrl+Shift+Key

Keyboard Send Control Characters = Send Special Function Key

Intercode Delay

Specifies the delay between labels transmitted to the host for this interface. The selectable range for this feature is from 0 to 99 seconds. See "Intercode Delay" on page 337 for more detailed programming instructions

Set Intercode Delay

To configure this feature, scan the ENTER/EXIT PROGRAMMING MODE bar code above, then the bar code at left followed by the digits from the Alphanumeric characters in Appendix G, Keypad representing your desired character(s). End by scanning the ENTER/EXIT bar code again.

Make a mistake? Scan the CANCEL bar code to abort and not save the entry string. You can then start again at the beginning.

CANCEL

★00 = No Intercode Delay

USB Keyboard Speed

This option specifies the USB poll rate for a USB Keyboard.

NOTE: This feature applies ONLY to the USB Keyboard interface.

★USB Keyboard Speed = 1ms

USB Keyboard Speed = 2ms

USB Keyboard Speed = 3ms

USB Keyboard Speed = 5ms

USB Keyboard Speed = 7ms

USB Keyboard Speed = 10ms

CONFIGURATION | USB-OEM INTERFACE

SECTION CONTENTS

- USB-OEM Device Usage

USB-OEM Device Usage

The USB-OEM protocol allows for the reader to be identified as one of two different types of bar code reader. Depending on what other reader you may already have connected to a USB-OEM POS, you may need to change this setting to enable all devices to communicate.

Options are:

- Tabletop Scanner
- Handheld Scanner

NOTE: This feature is not compatible with Multiple Labels Reading in a Volume.

USB-OEM Device Usage = Tabletop Scanner

★USB-OEM Device Usage = Handheld Scanner

CONFIGURATION | ETHERNET INTERFACE

The following feature is specific to CM968x. In order to configure the following configuration item, the scanner must be previously set up and configured in Ethernet interface. Then CM968x must be connected.

SECTION CONTENTS

- DHCP
- Static IP Address
- Subnet Mask
- Gateway Address
- DNS1 Address
- DNS2 Address
- Device Name
- Data Socket Port
- Aladdin Socket Port
- Image Socket Port
- LOGGER Socket Port
- DATA Flow Control Selection
- DATA Prefix Counter Selection
- AIDA LED mode
- Scanner Character Terminator
- Controller Input Data Buffer Size
- Controller Output Data Buffer Size
- Host Name
- Connection Role of TCPIP Channel
- Socket Server Address

DHCP

When DHCP is Enabled, the CM968x dynamically obtains an Internet Protocol (IP) address from a Dynamic Host Configuration Protocol (DHCP) server.

Otherwise, static IP address are used.

★DHCP = Disable

DHCP = Enable

Static IP Address

This feature sets a Static IP address for the CM968x. An IP address is a 32-bit number that is noted by using four numbers from 0 through 255, separated by periods. For example: 192.168.1.100.

To add the Cradle to an existing LAN you must specify a unique IP address that is not used elsewhere in the network.

Static IP Address

To configure, scan the ENTER/EXIT PROGRAMMING MODE bar code above, then the bar code at left followed by 8 digits (in hex) from the Alphanumeric characters in Appendix G, Keypad representing your desired character(s). End by scanning the ENTER/EXIT bar code.

Make a mistake? Scan the CANCEL bar code to abort and not save the entry string. You can then start again at the beginning.

CANCEL

★C0A8BB1F = (hex) 192.168.187.031

Subnet Mask

The subnet mask number is combined with the IP address number to identify which network segment the CM968x is on.

A subnet mask is a 32-bit number that is composed by using four numbers from 0 through 255, separated by periods. Typically, default subnet mask numbers use either 0 or 255 as values (such as 255.255.255.0), but other number values can appear.

To connect the device to an existing LAN, specify the Subnet Mask that the LAN uses.

Subnet Mask

To configure, scan the ENTER/EXIT PROGRAMMING MODE bar code above, then the bar code at left followed by 8 digits (in hex) from the Alphanumeric characters in Appendix G, Keypad representing your desired character(s). End by scanning the ENTER/EXIT bar code.

Make a mistake? Scan the CANCEL bar code to abort and not save the entry string. You can then start again at the beginning.

CANCEL

★FFFFFF00 = (hex) 192.168.187.31

Gateway Address

A gateway is a router that connects separate IP network segments. For example, a network segment might need a gateway to connect it to another network segment, a wide area network (WAN), or to the Internet.

This feature specifies the address of a local IP router on the same network as the CM968x, used to forward traffic to destinations beyond the local network. The value in each field must be a number from 0 through 255.

Gateway Address

To configure, scan the ENTER/EXIT PROGRAMMING MODE bar code above, then the bar code at left followed by 8 digits (in hex) from the Alphanumeric characters in Appendix G, Keypad representing your desired character(s). End by scanning the ENTER/EXIT bar code.

Make a mistake? Scan the CANCEL bar code to abort and not save the entry string. You can then start again at the beginning.

CANCEL

★C0A8BBFE = (hex) 192.168.187.254

DNS1 Address

This is the address of the preferred or primary DNS server for the CM968x. This server is used first, to resolve DNS names to IP addresses for DNS names queried by this computer that cannot be resolved by using local name resolution information (such as cached DNS names or names contained in a Hosts file).

DNS1 Address

To configure, scan the ENTER/EXIT PROGRAMMING MODE bar code above, then the bar code at left followed by 8 digits (in hex) from the Alphanumeric characters in Appendix G, Keypad representing your desired character(s). End by scanning the ENTER/EXIT bar code.

Make a mistake? Scan the CANCEL bar code to abort and not save the entry string. You can then start again at the beginning.

CANCEL

★ 00000000 = (hex) 0.0.0.0

DNS2 Address

This is the address of the alternate or secondary DNS server for CM968x. This server is used if the DNS server specified as the preferred DNS server (DNS1) is unreachable or cannot resolve DNS names to IP addresses for DNS names queried by this computer.

DNS2 Address
CETD2

To configure, scan the ENTER/EXIT PROGRAMMING MODE bar code above, then the bar code at left followed by 8 digits (in hex) from the Alphanumeric characters in Appendix G, Keypad representing your desired character(s). End by scanning the ENTER/EXIT bar code.

Make a mistake? Scan the CANCEL bar code to abort and not save the entry string. You can then start again at the beginning.

CANCEL

★ 00000000 = (hex) 0.0.0.0

Device Name

This parameter is used to uniquely identify one CM968x from other Datalogic devices.

Device Name

To configure, scan the ENTER/EXIT PROGRAMMING MODE bar code above, then the bar code at left followed by the digits (in hex) from the Alphanumeric characters in Appendix G, Keypad representing your desired character(s).

If less than the expected string of 64 characters is selected, scan the ENTER/ EXIT bar code to terminate the string. Exit programming mode by scanning the ENTER/EXIT barcode again.

Make a mistake? Scan the CANCEL bar code to abort and not save the entry string. You can then start again at the beginning.

CANCEL

★434D393638302D00 = ASCII "CM96x"

Data Socket Port

This parameter will allow the identification of a network service on an IP network (the Internet). It is a mapping to the underlying TCP-IP socket port number used for data communication:.

Data Socket Port

To configure, scan the ENTER/EXIT PROGRAMMING MODE bar code above, then the bar code at left followed by 5 digits from the Alphanumeric characters in Appendix G, Keypad representing your desired character(s).

Exit programming mode by scanning the ENTER/ EXIT barcode again.

Make a mistake? Scan the CANCEL bar code to abort and not save the entry string. You can then start again at the beginning.

CANCEL

★51000

Aladdin Socket Port

This parameter will allow the identification of a network service on an IP network (the Internet). It is a mapping to the underlying TCP-IP socket port number used for Aladdin Configuration.

Aladdin Socket Port

To configure, scan the ENTER/EXIT PROGRAMMING MODE bar code above, then the bar code at left followed by 5 digits from the Alphanumeric characters in Appendix G, Keypad representing your desired character(s).

Exit programming mode by scanning the ENTER/EXIT barcode again.

Make a mistake? Scan the CANCEL bar code to abort and not save the entry string. You can then start again at the beginning.

CANCEL

★59180

Image Socket Port

This parameter will allow the identification of a network service on an IP network (the Internet). It is a mapping to the underlying TCP-IP socket port number used for image transfer.

Image Socket Port

To configure, scan the ENTER/EXIT PROGRAMMING MODE bar code above, then the bar code at left followed by 5 digits from the Alphanumeric characters in Appendix G, Keypad representing your desired character(s).

Exit programming mode by scanning the ENTER/EXIT barcode again.

Make a mistake? Scan the CANCEL bar code to abort and not save the entry string. You can then start again at the beginning.

CANCEL

★53000

LOGGER Socket Port

This parameter will allow the identification of a network service on an IP network (the Internet). It is a mapping to the underlying TCP-IP socket port number used for monitoring data transfer. This Socket works also for industrial protocol Profinet or EtherNet/IP.

Logger Socket Port

To configure, scan the ENTER/EXIT PROGRAMMING MODE bar code above, then the bar code at left followed by 5 digits from the Alphanumeric characters in Appendix G, Keypad representing your desired character(s).

Exit programming mode by scanning the ENTER/EXIT barcode again.

Make a mistake? Scan the CANCEL bar code to abort and not save the entry string. You can then start again at the beginning.

CANCEL

★52000

DATA Flow Control Selection

The Datalogic Flow Control Mode is a powerful way to manage and optimize the communication with the Fieldbus Master. By enabling the FCM a few bytes of the exchange areas are reserved for driver operations and the rest are used by the application layer.

For more details see DAD/Driver Software Integration Guide.

★Flow Control Disable

Flow Control Enable

Flow control and consistency enable

DATA Prefix Counter Selection

When Enabled, two character representing a decimal counter are added to transmitted label. The counter goes from 00 to 99, then returns to 00.

Ex: when the scanner reads the Label “ABC” multiple times, the result is:

00ABC

01ABC

...

99ABC

00ABC

★Prefix Counter = Disable

Prefix Counter = Enable

AIDA LED mode

This parameter changes the meaning of indication LEDs of CM9600

For details see Appendix D, AIDA LED

AIDA LED = Disable

★AIDA LED = Enable

Scanner Character Terminator

By default CM968x considers a Label transmitted by the scanner 'CR' terminated.

If this format is not possible, for instance when “CR” is present in the middle of the labels, it is possible to change the terminator with one or more different characters.

Scanner Character Terminator

To configure, scan the ENTER/EXIT PROGRAMMING MODE bar code above, then the bar code at left followed by 20 digits (in hex) from the Alphanumeric characters in Appendix G, Keypad representing your desired character(s).

If less than the expected string of 20 characters is selected, scan the ENTER/ EXIT bar code to terminate the string. Exit programming mode by scanning the ENTER/EXIT barcode again.

Make a mistake? Scan the CANCEL bar code to abort and not save the entry string. You can then start again at the beginning.

CANCEL

★0D00...

Controller Input Data Buffer Size

Define the size of the controller input data buffer (only for Profinet protocol).

Controller Input Data Buffer Size = 8 byte

Controller Input Data Buffer Size = 16 byte

Controller Input Data Buffer Size = 32 byte

Controller Input Data Buffer Size = 64 byte

★Controller Input Data Buffer Size = 128 byte

Controller Input Data Buffer Size = 256 byte

Controller Input Data Buffer Size = 512 byte

Controller Input Data Buffer Size = 1024 byte

Controller Output Data Buffer Size

Define the size of the controller input data buffer (only for Profinet protocol).

Controller Output Data Buffer Size = 8 byte

★Controller Output Data Buffer Size = 16 byte

Controller Output Data Buffer Size = 32 byte

Controller Output Data Buffer Size = 64 byte

Controller Output Data Buffer Size = 128 byte

Controller Output Data Buffer Size = 256 byte

Controller Output Data Buffer Size = 512 byte

Controller Output Data Buffer Size = 1024 byte

Host Name

This parameter is used to uniquely identify one CM968x from other Datalogic devices over Standard network.

Host Name

To configure, scan the ENTER/EXIT PROGRAMMING MODE bar code above, then the bar code at left followed by the digits (in hex) from the Alphanumeric characters in Appendix G, Keypad representing your desired character(s).

If less than the expected string of 64 characters is selected, scan the ENTER/ EXIT bar code to terminate the string. Exit programming mode by scanning the ENTER/EXIT barcode again.

Make a mistake? Scan the CANCEL bar code to abort and not save the entry string. You can then start again at the beginning.

CANCEL

★434D3936387800 = ASCII "CM968x"

Connection Role of TCPIP Channel

TCP IP Label Endpoint Connection Role is Client or Server.

Connection Role = Client

★Connection Role = Server

Socket Server Address

This feature specifies the address of a local Data Socket server on the same network as the CM968x. An IP address is a 32-bit number that is notated by using four numbers from 0 through 255, separated by periods. For example: 192.168.187.1.

Socket Server Address

To configure, scan the ENTER/EXIT PROGRAMMING MODE bar code above, then the bar code at left followed by 8 digits (in hex) from the Alphanumeric characters in Appendix G, Keypad representing your desired character(s). End by scanning the ENTER/EXIT bar code.

Make a mistake? Scan the CANCEL bar code to abort and not save the entry string. You can then start again at the beginning.

CANCEL

★C0A8BB01 = (hex) 192.168.187.01

CONFIGURATION | DATA FORMAT

SECTION CONTENTS

GLOBAL SETTINGS starting on page 104

- Global Prefix/Suffix
- Case Conversion
- Character Conversion
- Global AIM ID
- GS1-128 AIM ID

LABEL ID starting on page 107

- Label ID: Pre-loaded Sets
- Label ID: Set Individually Per Symbology
- Label ID Control
- Label ID Symbology Selection

GLOBAL SETTINGS

Global Prefix/Suffix

Up to 20 ASCII characters may be added as a prefix (in a position before the bar code data) and/or as a suffix (in a position following the bar code data). See page 339 in "References" for more detailed programming instructions.

To configure, scan the ENTER/EXIT PROGRAMMING MODE bar code above, then the bar code at right followed by the digits from the Alphanumeric characters in Appendix G, Keypad representing your desired character(s). End by scanning the ENTER/EXIT bar code.

Set Global Prefix

Set Global Suffix

To configure, scan the ENTER/EXIT PROGRAMMING MODE bar code above, then the bar code at left followed by the digits from the Alphanumeric characters in Appendix G, Keypad representing your desired character(s). End by scanning the ENTER/EXIT bar code.

Make a mistake? Scan the CANCEL bar code to abort and not save the entry string. You can then start again at the beginning.

CANCEL

★No Global Prefix

★Global Suffix = 0x0D(CR)

Case Conversion

This feature allows conversion of the case of all alphabetic characters to upper or lower case.

NOTE: Case conversion affects ONLY scanned bar code data, and does not affect Label ID, Prefix, Suffix, or other appended data.

★Case Conversion = Disable (no case conversion)

Case Conversion = Convert to upper case

Case Conversion = Convert to lower case

Character Conversion

Character conversion is an eight byte configuration item. The eight bytes are 4 character pairs represented in hexadecimal ASCII values. The first character in the pair is the character that will be converted. The second character in the pair is the character to convert to. If the character to convert in a pair is FF, then no conversion is done. See page 345 in "References" for more detailed programming instructions.

Configure Character Conversion

To configure, scan the ENTER/EXIT PROGRAMMING MODE bar code above, then the bar code at left followed by the digits from the Alphanumeric characters in Appendix G, Keypad representing your desired character(s). End by scanning the ENTER/EXIT bar code.

Make a mistake? Scan the CANCEL bar code to abort and not save the entry string. You can then start again at the beginning.

CANCEL

★0xFFFFFFFFFFFFFFFF
(no character conversion)

Global AIM ID

NOTE: This feature enables/disables addition of AIM IDs for all symbology types.

AIM label identifiers (as opposed to custom characters you select yourself as with label identifiers) can be included with scanned bar code data. See page 340 for more detailed programming instructions.

★Global AIM ID = Disable

Global AIM ID = Enable

GS1-128 AIM ID

If Global AIM ID is disabled, the AIM ID for GS1-128 can be enabled/disabled independently. The AIM ID for GS1-128 is a]C1,]C2.

AIM IDs for other symbologies can be enabled/disabled independently as well. Contact Customer Support for assistance.

Global AIM ID = Disable

★Global AIM ID = Enable

LABEL ID

A Label ID is a customizable code of up to three ASCII characters (each can be one of hex 0x01-0xFF), used to identify a bar code (symbology) type. It can be appended previous to or following the transmitted bar code data depending upon how this option is enabled. This feature provides options for configuring custom Label IDs as a pre-loaded set (see Label ID: Pre-loaded Sets below) or individually per symbology (see "Label ID: Set Individually Per Symbology" on page 108). If you wish to program the reader to always include an industry standard label identifier for ALL symbology types, see the previous feature "Global AIM ID" on page 106.

Label ID: Pre-loaded Sets

The reader supports two pre-loaded sets of Label IDs, the USA set and the EU set. See "Label ID: Pre-loaded Sets" on page 341 for more information concerning the pre-loaded sets that are provided.

CAUTION: When changing from one Label ID set to another, all other reader configuration settings, including the host interface type, will be erased and set to the factory defaults. Any custom configuration or custom defaults will be lost.

★Label ID Pre-loaded Set = USA Set

Label ID Pre-loaded Set = EU Set

Label ID: Set Individually Per Symbology

This feature configures a Label ID individually for a single symbology.

NOTE: This setting requires the scanning of bar codes from multiple sections. See "Label ID: Set Individually Per Symbology" on page 343 **for more detailed programming instructions.**

Label ID Control

This option controls whether a Label ID is disabled, or sent as a prefix or suffix for a given symbology type.

★Label ID Transmission = Disable

Label ID Transmission = Enable as Prefix

Label ID Transmission = Enable as Suffix

Label ID Symbology Selection

This option selects the symbology for which a Label ID is to be configured. See "Label ID: Set Individually Per Symbology" on page 343 for full instructions.

Make a mistake? Scan the CANCEL bar code to abort and not save the entry string. You can then start again at the beginning.

CANCEL

Set UPC-A Label ID Character(s)

Set UPC-A/P2 Label ID Character(s)

Set UPC-A/P5 Label ID Character(s)

Set UPC-E Label ID Character(s)

Set UPC-E/P2 Label ID Character(s)

Set UPC-E/P5 Label ID Character(s)

Set EAN-13 Label ID Character(s)

Label ID Symbology Selection (continued)

Set EAN-13/P2 Label ID Character(s)

Set EAN-13/P5 Label ID Character(s)

Set ISBN Label ID Character(s)

Set ISSN Label ID Character(s)

Set EAN-8 Label ID Character(s)

Set EAN-8 Label ID Character(s)

Set EAN-8 Label ID Character(s)

Set GS1 DataBar Omnidirectional Label ID Character(s)

Label ID Symbology Selection (continued)

Set GS1 DataBar Expanded Label ID Character(s)

Set GS1 DataBar Limited Label ID Character(s)

Set Code 39 Label ID Character(s)

Set Code 32 Label ID Character(s)

Set Code 39 CIP HR Label ID Character(s)

Set Code 128 Label ID Character(s)

Set Code GS1-128 Label ID Character(s)

Set Interleaved 2 of 5 Label ID Character(s)

Label ID Symbology Selection (continued)

Set Interleaved 2 of 5 CIP HR Label ID Character(s)

Datalogic 2 of 5 Label ID Character(s)

Standard 2 of 5 Label ID Character(s)

Industrial 2 of 5 Label ID Character(s)

IATA Label ID Character(s)

Codabar Label ID Character(s)

ABC Codabar Label ID Character(s)

ISBT 128 Label ID Character(s)
(single and concatenated)

Label ID Symbology Selection (continued)

Code 11 Label ID Character(s)

MSI Label ID Character(s)

Plessey Label ID Character(s)

Anker Plessey Label ID Character(s)

Set Matrix 2 of 5 Label ID Character(s)

CONFIGURATION | POWER OPTIMIZATION

SECTION CONTENTS

- Power Optimization

Power Optimization

Optimize for power consumption or performance. When it is set to consumption, the power peaks are reduced.

NOTE: These parameters refer to PD9600 models only.

★Power Optimization = Performance

Power Optimization = Consumption

CONFIGURATION | READING PARAMETERS

SECTION CONTENTS

SCANNING FEATURES starting on page 117

- Scan Mode
- Scanning Active Time
- Flash On Time
- Flash Off Time
- Double Read Timeout
- Stand Detection Behavior (Desk only)
- Stand Mode/Object Detection Indication (Stand Mode Flash)
- Stand Mode/Object Detection Sensitivity
- Stand Mode/Object Detection Illumination Off Time
- Corded Stand Mode
- Dock Detection Beep

LED AND BEEPER INDICATORS starting on page 125

- Power On Alert
- Good Read Beep Type
- Good Read Beep Frequency
- Good Read Beep Length
- Good Read Beeper Volume / Vibration
- Vibration Feedback for Good Read
- RGB Good Read Enable
- RGB Good Read Color
- Good Read LED Duration
- Good Read: When to Indicate
- Green Spot Duration

CAMERA CONTROL starting on page 132

- Aiming Pointer
- Pick Mode
- Illumination Power Level (only for STD, HP, DC models)
- Mobile Phone Mode
- Image Capture
- Multiple Labels Ordering by Code Symbology
- Multiple Labels Ordering by Code Length

DPM STRATEGY (DPX ONLY) starting on page 135

Set DPM Strategy

SCANNING FEATURES

Scan Mode

Selects the reader's scan operating mode. See page 346 in "References" for descriptions.

★Scan Mode = Trigger Single

Scan Mode = Trigger Hold Multiple

Scan Mode = Trigger Pulse Multiple

Scan Mode = Flashing

Scan Mode = Always On[a]

Scan Mode = Stand Mode/Object Detection[a]

Scan Mode = Retained Trigger hold multiple

a. Not available for AR model.

Scanning Active Time

This setting specifies the amount of time that the reader stays in scan ON state once the state is entered. The range for this setting is from 1 to 255 seconds in 1-second increments. See page 348 in “References” for further description of this feature.

Scanning Active Time = 3 seconds

★Scanning Active Time = 5 seconds

Scanning Active Time = 8 seconds

Flash On Time

This feature specifies the ON time for the indicator LED while in Flash Mode. The selectable range is 100 to 9,900 milliseconds (0.1 to 9.9 seconds), in 100 millisecond increments. See page 350 in “References” for detailed information on setting this feature.

Select Flash ON Time Setting

To configure this feature, scan the ENTER/EXIT PROGRAMMING MODE bar code above, then the bar code at left followed by the digits from the Alphanumeric characters in Appendix G, Keypad representing your desired character(s). End by scanning the ENTER/EXIT bar code again.

Make a mistake? Scan the CANCEL bar code to abort and not save the entry string. You can then start again at the beginning.

CANCEL

★10 = Flash is ON for 1 Second

Flash Off Time

This feature specifies the OFF time for the indicator LED while in Flash Mode. The selectable range is 100 to 9,900 milliseconds (0.1 to 9.9 seconds), in 100 millisecond increments. See page 351 in “References” for detailed information on setting this feature.

Select Flash OFF Time Setting

To configure this feature, scan the ENTER/EXIT PROGRAMMING MODE bar code above, then the bar code at left followed by the digits from the Alphanumeric characters in Appendix G, Keypad representing your desired character(s). End by scanning the ENTER/EXIT bar code again.

Make a mistake? Scan the CANCEL bar code to abort and not save the entry string. You can then start again at the beginning.

CANCEL

★06 = Flash is OFF for 600ms

Double Read Timeout

Double Read Timeout prevents a double read of the same label by setting the minimum time allowed between reads of labels of the same symbology and data. If the unit reads a label and sees the same label again within the specified timeout, the second read is ignored. Double Read Timeout does not apply to scan modes that require a trigger pull for each label read.

Double Read Timeout = 0.1 Second

Double Read Timeout = 0.2 Second

Double Read Timeout = 0.4 Second

Double Read Timeout (continued)

★Double Read Timeout = 0.6 Second

Double Read Timeout = 0.8 Second

Double Read Timeout = 1 Second

Stand Detection Behavior (Desk only)

Specifies the behavior of the reader when stationary in a stand.

Below are further options concerning Stand Operation.

Ignore Autorecognition: Disables mode switching when the reader is placed in a stand.

Switch to Stand Mode/Object Detection: Automatically switches the reader to Stand Mode/Object Detection when the reader is placed in the stand.

Switch to Always On: Automatically switches the reader to Always On mode when the reader is placed in the stand.

Switch to Flashing: Automatically switches the reader to Flash Mode when the reader is placed in the stand.

★Stand/Base Detection Behavior = Ignore Autorecognition (do not change behavior)

Stand/Base Detection Behavior = Switch to Stand Mode/Object Detection

Stand/Base Detection Behavior = Switch to Always On

Stand/Base Detection Behavior = Switch to Flashing

Stand Mode/Object Detection Indication (Stand Mode Flash)

This operation is useful for indicating when the reader is in Stand Mode. If enabled, the blue indicator will blink when Stand Mode scanning is active.

★Stand Mode/Object Detection Indication = Disable

Stand Mode/Object Detection Indication = Enable

Stand Mode/Object Detection Sensitivity

Sets the sensitivity level for stand mode/object detection wakeup. Choices are low, medium and high.

Stand/Base Detection Sensitivity = Low

★Stand/Base Detection Sensitivity = Medium

Stand/Base Detection Sensitivity = High

Stand Mode/Object Detection Illumination Off Time

Specifies the amount of time reader illumination stays off after pulling the trigger when in Stand Mode/Object Detection. The configurable range is 01 to 32 by 01 in increments of 500ms (500ms to 16 seconds).

Set Illumination OFF Time

To configure, scan the ENTER/EXIT PROGRAMMING MODE bar code above, then the bar code at left followed by the digits from the Alphanumeric characters in Appendix G, Keypad representing your desired character(s). End by scanning the ENTER/EXIT bar code.

Make a mistake? Scan the CANCEL bar code to abort and not save the entry string. You can then start again at the beginning.

CANCEL

★04 = Illumination OFF Time 1 second

Corded Stand Mode

This parameter sets the Stand Mode operation for corded models only.

★Corded Stand Mode = Disable

Corded Stand Mode = Generic Stand

Dock Detection Beep

If enabled, when the Handheld reader is placed in a dock (base station or corded stand), it will beep.

★Dock Detection Beep = Disable

Dock Detection Beep = Enable

LED AND BEEPER INDICATORS

Power On Alert

Disables or enables the indication (from the Beeper) that the reader is receiving power.

Power On Alert = Disable (No Audible Indication)

★Power On Alert = Power-up Beep

Good Read Beep Type

Specifies whether the good read beep has a mono or bitonal beep sound.

★Good Read Beep Type = Mono

Good Read Beep Type = Bitonal

Good Read Beep Frequency

Adjusts the good read beep to sound at a selectable low, medium or high frequency, selectable from the list below. (Controls the beeper's pitch/tone.)

Good Read Beep Frequency = Low

★Good Read Beep Frequency = Medium

Good Read Beep Frequency = High

Good Read Beep Length

Good Read Beep Length = 60 msec

★Good Read Beep Length = 80 msec

Good Read Beep Length = 100 msec

Good Read Beep Length = 120 msec

Good Read Beep Length = 140 msec

Good Read Beep Length = 160 msec

Good Read Beep Length = 180 msec

Good Read Beep Length = 200 msec

Good Read Beeper Volume / Vibration

Selects the beeper volume (loudness) upon a good read beep. There are three selectable volume levels.

In addition to three selectable volume levels, the user can also activate a vibration feedback for good read.

Good Read Beeper Volume = Beeper Off

Good Read Beeper Volume = Low

Good Read Beeper Volume = Medium

★Good Read Beeper Volume = High

Vibration Feedback for Good Read

★Vibration Feedback for Good Read = Enable Vibration

Vibration Feedback for Good Read = Disable Vibration

RGB Good Read Enable

Specifies whether the RGB good read indicator is enabled or disabled.

RGB Good Read = Disable

★RGB Good Read = Enable

RGB Good Read Color

Selects the good read LED color.

RGB Good Read Color = RED

★RGB Good Read Color = GREEN

RGB Good Read Color = BLUE

Good Read LED Duration

This feature specifies the amount of time that the Good Read LED remains on following a good read. The good read LED on time can be set within a range of 100 milliseconds to 25,500 milliseconds (0.1 to 25.5 seconds) in 100ms increments. A setting of 00 keeps the LED on until the next trigger pull.

See page 352 in “References” for detailed instructions and examples for setting this feature.

Good Read LED Duration Setting = Keep LED on until next trigger pull

Select Good Read LED Duration Setting

To configure this feature, scan the ENTER/EXIT PROGRAMMING MODE bar code above, then the bar code at left followed by three digits from the Alphanumeric characters in Appendix G, Keypad representing your desired character(s). End by scanning the ENTER/EXIT bar code again.

Make a mistake? Scan the CANCEL bar code to abort and not save the entry string. You can then start again at the beginning.

CANCEL

★003 = Good Read LED stays on for 300 msec.

NOTE: Indicators are dimmed during sleep.

Good Read: When to Indicate

This feature specifies when the reader will provide indication (beep and/or flash its green LED) upon successfully reading a bar code.

★Indicate Good Read = After Decode

Indicate Good Read = After Transmit

Indicate Good Read =
After CTS goes inactive then active

Green Spot Duration

Specifies the duration of the good read pointer beam after a good read.

Green Spot Duration = Disable (Green Spot is Off)

★Green Spot Duration = Short (300 msec)

Green Spot Duration = Medium (500 msec)

Green Spot Duration = Long (800 msec)

CAMERA CONTROL

Aiming Pointer

Enables/disables the aiming pointer for all symbologies.

Aiming Pointer = Disable

★Aiming Pointer = Enable

Aiming Pointer = Green Spot

Pick Mode

Specifies the ability of the reader to decode labels only when they are close to the center of the aiming pattern. This allows the reader to accurately target labels when they are placed close together, such as on a pick sheet.

★Pick Mode = Disable

Pick Mode = Enable

Illumination Power Level (only for STD, HP, DC models)

With this parameter you can reduce the power of the illuminator. Beware that if there is no alternative light source, this setting can worsen reading performance.

★Illumination Power Level = 100%

Illumination Power Level = Medium

Illumination Power Level = Low

Illumination Power Level = Off

Mobile Phone Mode

This mode is useful for scanning bar codes displayed on a mobile phone. Other options for this feature can be configured using the Datalogic Aladdin application.

Mobile Phone Mode = Disable

★Mobile Phone Mode = Enable

Mobile Phone Mode = Enhanced

Image Capture

For information and a list of options for Image Capture, use the Datalogic Aladdin configuration application, available for free download from the Datalogic Scanning website.

Multiple Labels Ordering by Code Symbology

This feature allows you to specify the order multiple labels are transmitted by symbology type. This parameter is applied when the reader is configured in “Retained Trigger hold multiple” (see page 117). For detailed information on setting this feature, see page 346 in “References”.

Select Symbologies for Multiple Labels Ordering

To configure, scan the ENTER/EXIT PROGRAMMING MODE bar code above, then the bar code at left followed by Hex values from the table on page 347 corresponding to the desired code symbologies. End by scanning the ENTER/EXIT bar code.

Make a mistake? Scan the CANCEL bar code to abort and not save the entry string. You can then start again at the beginning.

CANCEL

★000000000000 = Random order

Multiple Labels Ordering by Code Length

Specifies the transmission ordering by code length, when Multiple Labels per Frame is enabled.

★Multiple Labels Ordering = Disable

Multiple Labels Ordering = Transmit Increasing Length Order

Multiple Labels Ordering = Transmit Decreasing Length Order

DPM STRATEGY (DPX ONLY)

Set DPM Strategy

- Auto: The scanner automatically detects the best reading configuration.
- Machined Surface: The machined surface configuration supports most use cases. Keep the target 5 cm from the reader. The red and white illuminator is used to read the codes.
- Dot Peen: Ideal for reading dot peen codes or codes on damaged/rusty surfaces. Keep the target around 3 cm from the reader. The white illuminator is used to read the codes.
- Shiny Metal: Ideal for reading laser etched codes on shiny metal surfaces. Keep the target 2 cm from the reader. The blue illuminator is used to read the codes.
- Cylindrical: Ideal for laser etched labels on shiny cylindrical metal surfaces. Keep the target 2 cm from the reader. The blue illuminator is used to read the labels.

★DPM Strategy = Auto

DPM Strategy = Machined Surface

DPM Strategy = Dot Peen

DPM Strategy = Shiny Metal

DPM Strategy = Cylindrical

NOTES

CONFIGURATION | MOTION FEATURES

SECTION CONTENTS

MOTION FEATURES starting on page 137

- Motionless Timeout
- Motion Sensitivity
- Motion Aiming Control

Use this chapter to configure motion settings for the handheld.

Reference Appendix C, Standard Defaults, for a listing of standard factory settings.

Motionless Timeout

The period of time that must expire without detecting any motion, before the reader is assumed to be in a motionless condition. The selectable setting is from 500 to 25,500 milliseconds in 100 millisecond increments. This option relates to such features as Aimer On and Stand Mode/Object Detection scanning with respect to motion.

Select Motionless Timeout

To configure this feature, scan the ENTER/EXIT PROGRAMMING MODE bar code above, then the bar code at left followed by the digits from the Alphanumeric characters in Appendix G, Keypad representing your desired character(s). End by scanning the ENTER/EXIT bar code again.

Make a mistake? Scan the CANCEL bar code to abort and not save the entry string. You can then start again at the beginning.

CANCEL

★020 = Motionless Timeout = 2 seconds

Motion Sensitivity

Sets the sensitivity level for motion detection wakeup. Choices are low, medium and high.

Motion Sensitivity = Low

★Motion Sensitivity = Medium

Motion Sensitivity = High

Motion Aiming Control

Enables/Disables the Aiming system when motion is detected.

Motion Aiming Control = Disable

★Motion Aiming Control = Enable

CONFIGURATION | 1D SYMBOLOGIES

SECTION CONTENTS

- **Disable All Symbologies** starting on page 141
- **Coupon Control** starting on page 143
- **UPC-A** starting on page 144
- **UPC-E** starting on page 146
- **EAN-13** starting on page 149
- **EAN-8** starting on page 152
- **UPC/EAN Global Settings** starting on page 154
- **GS1 DataBar™ Omnidirectional** starting on page 158
- **GS1 DataBar™ Expanded** starting on page 159
- **GS1 DataBar™ Limited** starting on page 162
- **Code 39** starting on page 163
- **Trioptic Code** starting on page 168
- **Code 39 Danish PPT** starting on page 168
- **Code 39 PZN** starting on page 169
- **Code 39 La Poste** starting on page 169
- **Code 32 (Italian Pharmaceutical)** starting on page 170
- **Code 39 CIP HR (French Pharmaceutical)** starting on page 171
- **Code 128** starting on page 172
- **GS1-128** starting on page 176
- **1D Global Feature** starting on page 141
- **Interleaved 2 of 5 (I 2 of 5)** starting on page 177
- **Interleaved 2 of 5, Febraban** starting on page 181
- **Interleaved 2 of 5 CIP HR** starting on page 181
- **Matrix 2 of 5** starting on page 182
- **Standard 2 of 5** starting on page 185
- **Compressed 2 of 5** starting on page 188
- **Datalogic 2 of 5** starting on page 191
- **Industrial 2 of 5** starting on page 194
- **IATA** starting on page 197
- **Follett 2 of 5** starting on page 198
- **Codabar** starting on page 199
- **ABC Codabar** starting on page 205
- **ISBT 128** starting on page 207
- **Code 11** starting on page 210
- **Code 93** starting on page 213
- **MSI** starting on page 217
- **Pharmacode** starting on page 220
- **Plessey** starting on page 223
- **BC412** starting on page 226

DISABLE ALL SYMBOLOGIES

Scan this label to disable all symbologies.

Disable All Symbologies

1D GLOBAL FEATURE

Default settings are indicated at each feature/option with a star. Also reference Appendix C, Standard Defaults for a listing of the most widely used set of standard factory settings. That section also provides space to record any custom settings needed or implemented for your system.

To set most features:

1. Scan the ENTER/EXIT PROGRAMMING bar code at the top of applicable programming pages.
2. Scan the correct bar code to set the desired programming feature or parameter. You may need to cover unused bar codes on the page, and possibly the facing page, to ensure that the reader reads only the bar code you intend to scan.
3. If additional input parameters are needed, go to Appendix G, Keypad, and scan the appropriate characters from the keypad.

NOTE: Additional information about many features can be found in the "References" chapter.

If you make a mistake before the last character, scan the CANCEL bar code to abort and not save the entry string. You can then start again at the beginning.

Complete the programming sequence by scanning the ENTER/EXIT PROGRAMMING bar code to exit Programming Mode.

1D Normal/Inverse Symbol Control

Specifies the options available for decoding normal/negative printed symbols for 1D barcodes.

★Allow only Normal 1D Barcode

Allow only Inverse 1D Barcode

Allow both Normal and Inverse 1D Barcode

COUPON CONTROL

Coupon Control

This feature is used to control the method of processing coupon labels.

Options are:

- Allow all — allow all coupon bar codes to be decoded
- Enable only UPC/EAN — enables only UPC/EAN coupon decoding
- Enable only GS1 DataBar — enables only GS1 DataBar coupon decoding

To set this feature:

1. Scan the Enter/Exit bar code.
2. Scan either the enable or disable bar code below. You'll need to cover any unused bar codes on this and the facing page to ensure that the reader sees only the bar code you intend to scan.
3. Complete the programming sequence by scanning the Enter/Exit bar code.

Coupon Control = Allow all

★Coupon Control = Enable only UPC/EAN

Coupon Control = Enable only GS1 DataBar

UPC-A

The following options apply to the UPC-A symbology.

UPC-A Enable/Disable

When disabled, the reader will not read UPC-A bar codes.

UPC-A = Disable

★UPC-A = Enable

UPC-A Check Character Transmission

Enable this option to transmit the check character along with UPC-A bar code data.

UPC-A Check Character Transmission = Don't Send

★UPC-A Check Character Transmission = Send

Expand UPC-A to EAN-13

Expands UPC-A data to the EAN-13 data format. Selecting this feature also changes the symbology ID to match those required for EAN-13.

★UPC-A to EAN-13 = Don't Expand

UPC-A to EAN-13 = Expand

UPC-A Number System Character Transmission

This feature enables/disables transmission of the UPC-A number system character.

UPC-A Number System Character = Do not transmit

★UPC-A Number System Character = Transmit

UPC-E

The following options apply to the UPC-E symbology.

UPC-E Enable/Disable

When disabled, the reader will not read UPC-E bar codes.

UPC-E = Disable

★UPC-E = Enable

UPC-E Check Character Transmission

Enable this option to transmit the check character along with UPC-E bar code data.

UPC-E Check Character Transmission = Don't Send

★UPC-E Check Character Transmission = Send

Expand UPC-E to EAN-13

Expands UPC-E data to the EAN-13 data format. Selecting this feature also changes the symbology ID to match those required for EAN-13.

★UPC-E to EAN-13 = Don't Expand

UPC-E to EAN-13 = Expand

Expand UPC-E to UPC-A

Expands UPC-E data to the UPC-A data format. Selecting this feature also changes the symbology ID to match those required for UPC-A.

★UPC-E to UPC-A = Don't Expand

UPC-E to UPC-A = Expand

UPC-E Number System Character Transmission

This feature enables/disables transmission of the UPC-E number system character.

UPC-E Number System Character = Do not transmit

★UPC-E Number System Character = Transmit

GTIN Formatting

This feature enables/disables the ability to convert UPC-E, UPC-A, EAN-8, and EAN-13 labels into the GTIN 14-character format.

★GTIN Formatting = Disable

GTIN Formatting = Enable

EAN-13

The following options apply to the EAN-13 symbology.

EAN-13 Enable/Disable

When disabled, the reader will not read EAN-13 bar codes.

EAN-13 = Disable

★EAN-13 = Enable

EAN-13 Check Character Transmission

Enable this option to transmit the check character along with EAN-13 bar code data.

EAN-13 Check Character Transmission = Don't Send

★EAN-13 Check Character Transmission = Send

EAN-13 Flag 1 Character

Enables/disables transmission of an EAN/JAN-13 Flag1 character. The Flag 1 character is the first character of the label

EAN-13 Flag 1 Char = Don't transmit

★EAN-13 Flag 1 Char = Transmit

EAN-13 to ISBN Conversion

This option enables/disables conversion of EAN-13/JAN-13 Bookland labels starting with 978 to ISBN labels.

★EAN-13 ISBN Conversion = Disable

EAN-13 ISBN Conversion = Enable

EAN-13 to ISSN Conversion

Enables/disables conversion of EAN/JAN-13 Bookland labels starting with 977 to ISSN labels.

★ISSN = Disable

ISSN = Enable

EAN-8

The following options apply to the EAN-8 symbology.

EAN-8 Enable/Disable

When disabled, the reader will not read EAN-8 bar codes.

EAN-8 = Disable

★EAN-8 = Enable

EAN-8 Check Character Transmission

Enable this option to transmit the check character along with EAN-8 bar code data.

EAN-8 Check Character Transmission = Don't Send

★EAN-8 Check Character Transmission = Send

Expand EAN-8 to EAN-13

Enable this option to expand EAN-8/JAN-8 labels to EAN-13/JAN-13.

★EAN-8 to EAN-13 = Don't Expand

EAN-8 to EAN-13 = Expand

UPC/EAN GLOBAL SETTINGS

This section provides configuration settings for UPC-A, UPC-E, EAN 13 and EAN 8 symbologies, and affects all of these unless otherwise marked for each feature description.

UPC/EAN Price Weight Check

This feature enables/disables calculation and verification of price/weight check digits.

Options are

- Disabled
- Enable 4-digit price-weight check-digit calculation
- Enable 5-digit price-weight check-digit calculation
- Enable European 4-digit price-weight check-digit calculation
- Enable European 5-digit price-weight check-digit calculation

★Price Weight Check = Disable

Price Weight Check = 4-digit price-weight check

Price Weight Check = 5-digit price-weight check

Price Weight Check = European 4-digit price-weight check

Price Weight Check = European 5-digit price-weight check

UPC/EAN Quiet Zones

This feature specifies the number of quiet zones for UPC/EAN labels. Quiet zones are blank areas at the ends of a bar code, typically 10 times the width of the narrowest bar or space in the label. The property applies to all EAN-UPC symbologies globally and to the ADD-ONs.

UPC/EAN Quiet Zones = Two Modules

★UPC/EAN Quiet Zones = Five Modules

Add-Ons

The following features apply to optional add-ons.

NOTE: Contact Customer Support for advanced programming of optional and conditional add-ons.

Optional Add-ons

The reader can be enabled to optionally read the following add-ons (supplementals):

- P2
- P5

NOTE: If a UPC/EAN base label and a an add-on are both decoded, the reader will transmit the base label and add-on. If a UPC/EAN base label is decoded without an add-on, the base label will be transmitted without an add-on.

Conditional add-on settings (if enabled) are considered by the reader before optional add-on settings.

★Optional Add-Ons = Disable P2

Optional Add-Ons = Enable P2

★Optional Add-Ons = Disable P5

Optional Add-Ons = Enable P5

Optional Add-On Timer

This option sets the time the reader will look for an add-on when an add-on fragment has been seen and optional add-ons are enabled.

Optional Add-on Timer = 10ms

Optional Add-on Timer = 20ms

Optional Add-on Timer = 30ms

Optional Add-on Timer = 50ms

★Optional Add-on Timer = 70ms

Optional Add-on Timer = 100ms

Optional Add-on Timer = 160ms

GS1 DATABAR™ OMNIDIRECTIONAL

The following options apply to the GS1 DataBar Omnidirectional (formerly RSS-14) symbology.

GS1 DataBar Omnidirectional Enable/Disable

When disabled, the reader will not read GS1 DataBar Omnidirectional bar codes.

★GS1 DataBar Omnidirectional = Disable

GS1 DataBar Omnidirectional = Enable

GS1 DataBar Omnidirectional to GS1-128 Emulation

When enabled, GS1 DataBar Omnidirectional bar codes will be translated to the GS1-128 label data format.

★GS1 DataBar Omnidirectional to GS1-128 Emulation = Disable

GS1 DataBar Omnidirectional to GS1-128 Emulation = Enable

GS1 DATABAR™ EXPANDED

The following options apply to the GS1 DataBar Expanded (formerly RSS Expanded) symbology.

GS1 DataBar Expanded Enable/Disable

When disabled, the reader will not read GS1 DataBar Expanded bar codes.

★GS1 DataBar Expanded = Disable

GS1 DataBar Expanded = Enable

GS1 DataBar Expanded to GS1-128 Emulation

When enabled, GS1 DataBar Expanded bar codes will be translated to the GS1-128 label data format.

★GS1 DataBar Expanded to GS1-128 Emulation = Disable

GS1 DataBar Expanded to GS1-128 Emulation = Enable

GS1 DataBar Expanded Length Control

This feature specifies either variable length decoding or fixed length decoding for the GS1 DataBar Expanded symbology.

Variable Length: For variable-length decoding, a minimum length may be set.

Fixed Length: For fixed-length decoding, two different lengths may be set.

★GS1 DataBar Expanded Length Control = Variable Length

GS1 DataBar Expanded Length Control = Fixed Length

GS1 DataBar Expanded Set Length 1

This feature specifies one of the bar code lengths for "GS1 DataBar Expanded Length Control" on page 160. Length 1 is the minimum label length if in Variable Length Mode, or the first fixed length if in Fixed Length Mode. Length includes the bar code's data characters only.

The length can be set from 1 to 74 characters. See "Set Length 1" on page 355 for more detailed programming instructions.

Select GS1 DataBar Expanded Set Length 1 Setting

To configure this feature, scan the ENTER/EXIT PROGRAMMING MODE bar code above, then the bar code at left followed by the digits from the Alphanumeric characters in Appendix G, Keypad representing your desired character(s). End by scanning the ENTER/EXIT bar code again.

Make a mistake? Scan the CANCEL bar code to abort and not save the entry string. You can then start again at the beginning.

CANCEL

★Length 1 = 01 (one character)

GS1 DataBar Expanded Set Length 2

This feature specifies one of the bar code lengths for "GS1 DataBar Expanded Length Control" on page 160. Length 2 is the maximum label length if in Variable Length Mode, or the second fixed length if in Fixed Length Mode. Length includes the bar code's data characters only.

The length can be set from 1 to 74 characters. A setting of 00 specifies to ignore this length (only one fixed length). See "Set Length 2" on page 356 for more detailed programming instructions.

Select GS1 DataBar Expanded Set Length 2 Setting

To configure this feature, scan the ENTER/EXIT PROGRAMMING MODE bar code above, then the bar code at left followed by the digits from the Alphanumeric characters in Appendix G, Keypad representing your desired character(s). End by scanning the ENTER/EXIT bar code again.

Make a mistake? Scan the CANCEL bar code to abort and not save the entry string. You can then start again at the beginning.

CANCEL

★Length 2 = 74 (74 characters)

GS1 DATABAR™ LIMITED

The following options apply to the GS1 DataBar Limited (formerly RSS Limited) symbology.

GS1 DataBar Limited Enable/Disable

When disabled, the reader will not read GS1 DataBar Limited bar codes.

★GS1 DataBar Limited = Disable

GS1 DataBar Limited = Enable

GS1 DataBar Limited to GS1-128 Emulation

When enabled, GS1 DataBar Limited bar codes will be translated to the GS1-128 label data format.

★GS1 DataBar Limited to GS1-128 Emulation = Disable

GS1 DataBar Limited to GS1-128 Emulation = Enable

CODE 39

The following options apply to the Code 39 symbology.

Code 39 Enable/Disable

When disabled, the reader will not read Code 39 bar codes.

Code 39 = Disable

★Code 39 = Enable

Code 39 Check Character Calculation

Enable this option to enable/disable calculation and verification of an optional Code 39 check character. When disabled, any check character in the label is treated as a data character.

★Code 39 Check Character Calculation = Don't Calculate

Code 39 Check Character Calculation = Calculate Std Check

Code 39 Check Character Calculation = Calculate Mod 7 Check

Code 39 Check Character Calculation = Enable Italian Post Check

Code 39 Check Character Calculation = Enable Daimler Chrysler Check

Code 39 Check Character Transmission

Enable this option to transmit the check character along with Code 39 bar code data.

Code 39 Check Character Transmission = Don't Send

★Code 39 Check Character Transmission = Send

Code 39 Start/Stop Character Transmission

Enable this option to enable/disable transmission of Code 39 start and stop characters.

★Code 39 Start/Stop Character Transmission = Don't Transmit

Code 39 Start/Stop Character Transmission = Transmit

Code 39 Full ASCII

In Code 39 decoding, this enables/disables the translation of Code 39 characters to Code 39 full-ASCII characters.

★Code 39 Full ASCII = Disable

Code 39 Full ASCII = Enable

Code 39 Quiet Zones

This feature specifies the number of quiet zones for Code 39 labels. Quiet zones are blank areas at the ends of a bar code and are typically 10 times the width of the narrowest bar or space in the label.

Code 39 Quiet Zones = Quiet Zone on one side

Code 39 Quiet Zones = Quiet Zones on two sides

Code 39 Quiet Zones = Auto

Code 39 Quiet Zones = Virtual Quiet Zones on two sides

★Code 39 Quiet Zones =
Small Quiet Zones on two sides

Code 39 Length Control

This feature specifies either variable length decoding or fixed length decoding for the Code 39 symbology.

Variable Length: For variable-length decoding, a minimum length may be set.

Fixed Length: For fixed-length decoding, two different lengths may be set.

★Code 39 Length Control = Variable Length

Code 39 Length Control = Fixed Length

Code 39 Set Length 1

This feature specifies one of the bar code lengths for "Code 39 Length Control" on page 166. Length 1 is the minimum label length if in Variable Length Mode, or the first fixed length if in Fixed Length Mode. Length includes the bar code's check, data, and full-ASCII shift characters. The length does not include start/stop characters.

The length can be set from 0 to 50 characters. See "Set Length 1" on page 355 for more detailed programming instructions.

Select Code 39 Set Length 1 Setting

To configure this feature, scan the ENTER/EXIT PROGRAMMING MODE bar code above, then the bar code at left followed by the digits from the Alphanumeric characters in Appendix G, Keypad representing your desired character(s). End by scanning the ENTER/EXIT bar code again.

Make a mistake? Scan the CANCEL bar code to abort and not save the entry string. You can then start again at the beginning.

CANCEL

★Length 1 = 02 (2 characters)

Code 39 Set Length 2

This feature specifies one of the bar code lengths for "Code 39 Length Control" on page 166. Length 2 is the maximum label length if in Variable Length Mode, or the second fixed length if in Fixed Length Mode. Length includes the bar code's check, data, and full-ASCII shift characters. The length does not include start/stop characters.

The length can be set from 1 to 50 characters. A setting of 00 specifies to ignore this length (only one fixed length). See "Set Length 2" on page 356 for more detailed programming instructions.

Select Code 39 Set Length 2 Setting

To configure this feature, scan the ENTER/EXIT PROGRAMMING MODE bar code above, then the bar code at left followed by the digits from the Alphanumeric characters in Appendix G, Keypad representing your desired character(s). End by scanning the ENTER/EXIT bar code again.

Make a mistake? Scan the CANCEL bar code to abort and not save the entry string. You can then start again at the beginning.

CANCEL

★Length 2 = 50 (50 characters)

TRIOPTIC CODE

The following options apply to the trioptic symbology.

Trioptic Code Enable/Disable

When disabled, the reader will not read Trioptic Code bar codes.

★Trioptic Code = Disable

Trioptic Code = Enable

CODE 39 DANISH PPT

The following options apply to the Code 39 Danish PPT symbology.

Code 39 Danish PPT Enable/Disable

When disabled, the reader will not read Code 39 Danish PPT bar codes.

★Code 39 Danish PPT = Disable

Code 39 Danish PPT = Enable

CODE 39 PZN

The following options apply to the Code 39 PZN symbology.

Code 39 PZN Enable/Disable

When disabled, the reader will not read Code 39 PZN bar codes.

★Code 39 PZN = Disable

Code 39 PZN = Enable

CODE 39 LA POSTE

The following options apply to the Code 39 La Poste symbology.

Code 39 La Poste Enable/Disable

When disabled, the reader will not read Code 39 La Poste bar codes.

★Code 39 La Poste = Disable

Code 39 La Poste = Enable

CODE 32 (ITALIAN PHARMACEUTICAL)

The following options apply to the Code 32 symbology.

Code 32 Enable/Disable

When disabled, the reader will not read Code 32 bar codes.

★Code 32 = Disable

Code 32 = Enable

Code 32 Feature Setting Exceptions

NOTE: The following features are set for Code 32 by using these Code 39 settings:

"Code 39 Quiet Zones" on page 165

"Code 39 Length Control" on page 166

Code 32 Check Character Transmission

Enable this option to transmit the check character along with Code 32 bar code data.

★Code 32 Check Character Transmission = Don't Send

Code 32 Check Character Transmission = Send

Code 32 Start/Stop Character Transmission

Enable this option to enable/disable transmission of Code 32 start and stop characters.

★Code 32 Start/Stop Character Transmission = Don't Transmit

Code 32 Start/Stop Character Transmission = Transmit

CODE 39 CIP HR (FRENCH PHARMACEUTICAL)

The following options apply to the Code 39 CIP HR symbology.

Code 39 CIP HR Enable/Disable

Enables/Disables ability of the reader to decode Code 39 CIP HR labels.

★Code 39 CIP HR = Disable

Code 39 CIP HR = Enable

CODE 128

The following options apply to the Code 128 symbology.

Code 128 Enable/Disable

Enables/Disables ability of the reader to decode Code 128 labels.

Code 128 = Disable

★Code 128 = Enable

Expand Code 128 to Code 39

This feature enables/disables expansion of Code 128 labels to Code 39 labels. When enabled, the label identifier for a Code 128 label shall be set to Code 39 and all Code 39 formatting control shall be applied to the label.

★Code 128 to Code 39 = Don't Expand

Code 128 to Code 39 = Expand

Code 128 Check Character Transmission

Enable this option to transmit the check character along with Code 128 bar code data.

★Code 128 Check Character Transmission = Don't Send

Code 128 Check Character Transmission = Send

Code 128 Function Character Transmission

Enables/disables transmission of Code128 function characters 1, 2, 3, and 4.

★Code 128 Function Character Transmission = Don't Send

Code 128 Function Character Transmission = Send

Code 128 Quiet Zones

This feature specifies the number of quiet zones for Code 128 labels. Quiet zones are blank areas at the ends of a bar code and are typically 10 times the width of the narrowest bar or space in the label.

Code 128 Quiet Zones = No Quiet Zones

Code 128 Quiet Zones = Quiet Zone on one side

Code 128 Quiet Zones = Quiet Zones on two sides

★Code 128 Quiet Zones = Auto

Code 128 Quiet Zones = Virtual Quiet Zones on two sides

Code 128 Length Control

This feature specifies either variable length decoding or fixed length decoding for the Code 128 symbology.

Variable Length: For variable-length decoding, a minimum length may be set.

Fixed Length: For fixed-length decoding, two different lengths may be set.

★Code 128 Length Control = Variable Length

Code 128 Length Control = Fixed Length

Code 128 Set Length 1

This feature specifies one of the bar code lengths for "Code 128 Length Control" on page 174. Length 1 is the minimum label length if in Variable Length Mode, or the first fixed length if in Fixed Length Mode. Length includes the bar code's data characters only.

The length can be set from 1 to 80 characters. See "Set Length 1" on page 355 for more detailed programming instructions.

Select Code 128 Set Length 1 Setting

To configure this feature, scan the ENTER/EXIT PROGRAMMING MODE bar code above, then the bar code at left followed by the digits from the Alphanumeric characters in Appendix G, Keypad representing your desired character(s). End by scanning the ENTER/EXIT bar code again.

Make a mistake? Scan the CANCEL bar code to abort and not save the entry string. You can then start again at the beginning.

CANCEL

★Length 1 = 01 (one character)

Code 128 Set Length 2

This feature specifies one of the bar code lengths for "Code 128 Length Control" on page 174. Length 2 is the maximum label length if in Variable Length Mode, or the second fixed length if in Fixed Length Mode. Length includes the bar code's data characters only.

The length can be set from 1 to 80 characters. A setting of 00 specifies to ignore this length (only one fixed length). See "Set Length 2" on page 356 for more detailed programming instructions.

Select Code 128 Set Length 2 Setting

To configure this feature, scan the ENTER/EXIT PROGRAMMING MODE bar code above, then the bar code at left followed by the digits from the Alphanumeric characters in Appendix G, Keypad representing your desired character(s). End by scanning the ENTER/EXIT bar code again.

Make a mistake? Scan the CANCEL bar code to abort and not save the entry string. You can then start again at the beginning.

CANCEL

★Length 2 = 80 (80 characters)

GS1-128

The following options apply to the GS1-128 symbology. (Also known as USS-128, GTIN-128, UCC-128.)

GS1-128 Enable

This option enables/disables the ability of the reader to translate GS1-128 labels to the GS1-128 data format. Options are:

- Transmit GS1-128 labels in Code 128 data format.
- Transmit GS1-128 labels in GS1-128 data format.
- Do not transmit GS1-128 labels.

GS1-128 = Transmit in Code 128 data format

★GS1-128 = Transmit in GS1-128 data format

GS1-128 = Do not transmit GS1-128 labels

INTERLEAVED 2 OF 5 (I 2 OF 5)

The following options apply to the I 2 of 5 symbology.

CAUTION: When reading this symbology, the settings for I 2 of 5 Length Control AND I 2 of 5 Check Character Calculation MUST be enabled to increase decoding safety.

I 2 of 5 Enable/Disable

When disabled, the reader will not read I 2 of 5 bar codes.

★I 2 of 5 = Disable

I 2 of 5 = Enable

I 2 of 5 Check Character Calculation

This option enables/disables calculation and verification of an optional I 2 of 5 check character.

★I 2 of 5 Check Character Calculation = Disable

I 2 of 5 Check Character Calculation
= Calculate Std Check (Modulo 10 no AR)

I 2 of 5 Check Character Calculation
= Calculate German Parcel Check

I 2 of 5 Check Character Calculation (continued)

I 2 of 5 Check Character Calculation
= Calculate DHL Check

I 2 of 5 Check Character Calculation
= Calculate Daimler Chrysler Check

I 2 of 5 Check Character Calculation
= Calculate Bosch Check

I 2 of 5 Check Character Calculation
= Calculate Italian Post Check

I 2 of 5 Check Character Transmission

Enable this option to transmit the check character along with I 2 of 5 bar code data.

NOTE: This feature is valid only when I 2 of 5 Check Character Calculation is enabled.

I 2 of 5 Check Character Transmission = Don't Send

★I 2 of 5 Check Character Transmission = Send

I 2 of 5 Length Control

This feature specifies either variable length decoding or fixed length decoding for the I 2 of 5 symbology.

Variable Length: For variable-length decoding, a minimum length may be set.

Fixed Length: For fixed-length decoding, two different lengths may be set.

★I 2 of 5 Length Control = Variable Length

I 2 of 5 Length Control = Fixed Length

I 2 of 5 Set Length 1

This feature specifies one of the bar code lengths for "I 2 of 5 Length Control" on page 179. Length 1 is the minimum label length if in Variable Length Mode, or the first fixed length if in Fixed Length Mode. The length includes the bar code's check and data characters. The length can be set from 2 to 50 characters in increments of two. See "Set Length 1" on page 355 for more detailed programming instructions.

Select I 2 of 5 Set Length 1 Setting

To configure this feature, scan the ENTER/EXIT PROGRAMMING MODE bar code above, then the bar code at left followed by the digits from the Alphanumeric characters in Appendix G, Keypad representing your desired character(s). End by scanning the ENTER/EXIT bar code again.

Make a mistake? Scan the CANCEL bar code to abort and not save the entry string. You can then start again at the beginning.

CANCEL

★Length 1 = 06 (6 characters)

I 2 of 5 Set Length 2

This feature specifies one of the bar code lengths for "I 2 of 5 Length Control" on page 179. Length 2 is the maximum label length if in Variable Length Mode, or the second fixed length if in Fixed Length Mode. The length includes the bar code's check and data characters. The length can be set from 2 to 50 characters in increments of two. A setting of 00 specifies to ignore this length (only one fixed length). See "Set Length 2" on page 356 for more detailed programming instructions.

Select I 2 of 5 Set Length 2 Setting

To configure this feature, scan the ENTER/EXIT PROGRAMMING MODE bar code above, then the bar code at left followed by the digits from the Alphanumeric characters in Appendix G, Keypad representing your desired character(s). End by scanning the ENTER/EXIT bar code again.

Make a mistake? Scan the CANCEL bar code to abort and not save the entry string. You can then start again at the beginning.

CANCEL

★Length 2 = 50 (50 characters)

INTERLEAVED 2 OF 5, FEBRABAN

Interleaved 2 of 5, Febraban format Enable / Disable

NOTE: Interleaved 2 of 5 shall be enabled before enabling Febraban variant.

Enables/Disables ability of reader to decode Interleaved 2 of 5, Febraban format.

★2 of 5, Febraban format = Disable

2 of 5, Febraban format = Enable

INTERLEAVED 2 OF 5 CIP HR

The following options apply to the Interleaved 2 of 5 CIP HR symbology.

Interleaved 2 of 5 CIP HR Enable/Disable

Enables/Disables ability of the reader to decode Interleaved 2 of 5 CIP HR labels.

★Interleaved 2 of 5 CIP HR = Disable

Interleaved 2 of 5 CIP HR = Enable

MATRIX 2 OF 5

The following options apply to the Matrix 2 of 5 symbology.

Matrix 2 of 5 Enable/Disable

When disabled, the reader will not read Matrix 2 of 5 bar codes.

★Matrix 2 of 5 = Disable

Matrix 2 of 5 = Enable

Matrix 2 of 5 Check Character Calculation

This option enables/disables calculation and verification of an optional Matrix 2 of 5 check character.

★Matrix 2 of 5 Check Character Calculation = Disable

Matrix 2 of 5 Check Character Calculation = Enable

Matrix 2 of 5 Check Character Transmission

This feature enables/disables transmission of an optional Matrix 2 of 5 check character.

Matrix 2 of 5 Check Character Transmission = Don't Send

★Matrix 2 of 5 Check Character Transmission = Send

Matrix 2 of 5 Length Control

This feature specifies either variable length decoding or fixed length decoding for the Matrix 2 of 5 symbology.

Variable Length: For variable-length decoding, a minimum length may be set.

Fixed Length: For fixed-length decoding, two different lengths may be set.

★Matrix 2 of 5 Length Control = Variable Length

Matrix 2 of 5 Length Control = Fixed Length

Matrix 2 of 5 Set Length 1

This feature specifies one of the bar code lengths for "Standard 2 of 5 Length Control" on page 186. Length 1 is the minimum label length if in Variable Length Mode, or the first fixed length if in Fixed Length Mode. The length includes the bar code's check and data characters.

The length can be set from 1 to 50 characters. See "Set Length 1" on page 355 for more detailed programming instructions.

Select Matrix 2 of 5 Length 1 Setting

To configure this feature, scan the ENTER/EXIT PROGRAMMING MODE bar code above, then the bar code at left followed by the digits from the Alphanumeric characters in Appendix G, Keypad representing your desired character(s). End by scanning the ENTER/EXIT bar code again.

Make a mistake? Scan the CANCEL bar code to abort and not save the entry string. You can then start again at the beginning.

CANCEL

★Length 1 = 01 (1 character)

Matrix 2 of 5 Set Length 2

This feature specifies one of the bar code lengths for "Standard 2 of 5 Length Control" on page 186. Length 2 is the maximum label length if in Variable Length Mode, or the second fixed length if in Fixed Length Mode. The length includes the bar code's check and data characters.

The length can be set from 1 to 50 characters. A setting of 00 specifies to ignore this length (only one fixed length). See "Set Length 2" on page 356 for more detailed programming instructions.

Select Matrix 2 of 5 Set Length 2 Setting

To configure this feature, scan the ENTER/EXIT PROGRAMMING MODE bar code above, then the bar code at left followed by the digits from the Alphanumeric characters in Appendix G, Keypad representing your desired character(s). End by scanning the ENTER/EXIT bar code again.

Make a mistake? Scan the CANCEL bar code to abort and not save the entry string. You can then start again at the beginning.

CANCEL

★Length 2 = 50 (50 characters)

STANDARD 2 OF 5

The following options apply to the Standard 2 of 5 symbology.

Standard 2 of 5 Enable/Disable

When disabled, the reader will not read Standard 2 of 5 bar codes.

★Standard 2 of 5 = Disable

Standard 2 of 5 = Enable

Standard 2 of 5 Check Character Calculation

This option enables/disables calculation and verification of an optional Standard 2 of 5 check character.

★Standard 2 of 5 Check Character Calculation = Disable

Standard 2 of 5 Check Character Calculation = Enable

Standard 2 of 5 Check Character Transmission

This feature enables/disables transmission of an optional Standard 2 of 5 check character.

Standard 2 of 5 Check Character Transmission = Don't Send

★Standard 2 of 5 Check Character Transmission = Send

Standard 2 of 5 Length Control

This feature specifies either variable length decoding or fixed length decoding for the Standard 2 of 5 symbology.

Variable Length: For variable-length decoding, a minimum length may be set.

Fixed Length: For fixed-length decoding, two different lengths may be set.

★Standard 2 of 5 Length Control = Variable Length

Standard 2 of 5 Length Control = Fixed Length

Standard 2 of 5 Set Length 1

This feature specifies one of the bar code lengths for "Standard 2 of 5 Length Control" on page 186. Length 1 is the minimum label length if in Variable Length Mode, or the first fixed length if in Fixed Length Mode. The length includes the bar code's check and data characters.

The length can be set from 1 to 50 characters. See "Set Length 1" on page 355 for more detailed programming instructions.

Select Standard 2 of 5 Length 1 Setting

To configure this feature, scan the ENTER/EXIT PROGRAMMING MODE bar code above, then the bar code at left followed by the digits from the Alphanumeric characters in Appendix G, Keypad representing your desired character(s). End by scanning the ENTER/EXIT bar code again.

Make a mistake? Scan the CANCEL bar code to abort and not save the entry string. You can then start again at the beginning.

CANCEL

★Length 1 = 08 (8 characters)

Standard 2 of 5 Set Length 2

This feature specifies one of the bar code lengths for "Standard 2 of 5 Length Control" on page 186. Length 2 is the maximum label length if in Variable Length Mode, or the second fixed length if in Fixed Length Mode. The length includes the bar code's check and data characters.

The length can be set from 1 to 50 characters. A setting of 00 specifies to ignore this length (only one fixed length). See "Set Length 2" on page 356 for more detailed programming instructions.

Select Standard 2 of 5 Set Length 2 Setting

To configure this feature, scan the ENTER/EXIT PROGRAMMING MODE bar code above, then the bar code at left followed by the digits from the Alphanumeric characters in Appendix G, Keypad representing your desired character(s). End by scanning the ENTER/EXIT bar code again.

Make a mistake? Scan the CANCEL bar code to abort and not save the entry string. You can then start again at the beginning.

CANCEL

★Length 2 = 50 (50 characters)

COMPRESSED 2 OF 5

The following options apply to the Compressed 2 of 5 symbology.

Compressed 2 of 5 Enable/Disable

When disabled, the reader will not read Compressed 2 of 5 bar codes.

★Compressed 2 of 5 = Disable

Compressed 2 of 5 = Enable

Compressed 2 of 5 Check Character Calculation

This option enables/disables calculation and verification of an optional Compressed 2 of 5 check character.

★Compressed 2 of 5 Check Character Calculation = Disable

Compressed 2 of 5 Check Character Calculation = Enable

Compressed 2 of 5 Check Character Transmission

This feature enables/disables transmission of an optional Compressed 2 of 5 check character.

Compressed 2 of 5 Check Character Transmission = Don't Send

★Compressed 2 of 5 Check Character Transmission = Send

Compressed 2 of 5 Length Control

This feature specifies either variable length decoding or fixed length decoding for the Compressed 2 of 5 symbology.

Variable Length: For variable-length decoding, a minimum length may be set.

Fixed Length: For fixed-length decoding, two different lengths may be set.

★Compressed 2 of 5 Length Control = Variable Length

Compressed 2 of 5 Length Control = Fixed Length

Compressed 2 of 5 Set Length 1

This feature specifies one of the bar code lengths for "Compressed 2 of 5 Length Control" on page 189. Length 1 is the minimum label length if in Variable Length Mode, or the first fixed length if in Fixed Length Mode. The length includes the bar code's check and data characters.

The length can be set from 1 to 50 characters. See "Set Length 1" on page 355 for more detailed programming instructions.

Select Compressed 2 of 5 Length 1 Setting

To configure this feature, scan the ENTER/EXIT PROGRAMMING MODE bar code above, then the bar code at left followed by the digits from the Alphanumeric characters in Appendix G, Keypad representing your desired character(s). End by scanning the ENTER/EXIT bar code again.

Make a mistake? Scan the CANCEL bar code to abort and not save the entry string. You can then start again at the beginning.

CANCEL

★Length 1 = 01 (one character)

Compressed 2 of 5 Set Length 2

This feature specifies one of the bar code lengths for "Compressed 2 of 5 Length Control" on page 189. Length 2 is the maximum label length if in Variable Length Mode, or the second fixed length if in Fixed Length Mode. The length includes the bar code's check and data characters.

The length can be set from 1 to 50 characters. A setting of 00 specifies to ignore this length (only one fixed length). See "Set Length 2" on page 356 for more detailed programming instructions.

Select Compressed 2 of 5 Set Length 2 Setting

To configure this feature, scan the ENTER/EXIT PROGRAMMING MODE bar code above, then the bar code at left followed by the digits from the Alphanumeric characters in Appendix G, Keypad representing your desired character(s). End by scanning the ENTER/EXIT bar code again.

Make a mistake? Scan the CANCEL bar code to abort and not save the entry string. You can then start again at the beginning.

CANCEL

★Length 2 = 50 (50 characters)

DATALOGIC 2 OF 5

The following options apply to the Datalogic 2 of 5 symbology.

Datalogic 2 of 5 Enable/Disable

When disabled, the reader will not read Datalogic 2 of 5 bar codes.

★Datalogic 2 of 5 = Disable

Datalogic 2 of 5 = Enable

Datalogic 2 of 5 Check Character Calculation

This option enables/disables calculation and verification of an optional Datalogic 2 of 5 check character.

★Datalogic 2 of 5 Check Character Calculation = Disable

Datalogic 2 of 5 Check Character Calculation = Enable

Datalogic 2 of 5 Check Character Transmission

Enable this option to transmit the check character along with Datalogic 2 of 5 bar code data.

Datalogic 2 of 5 Check Character Transmission = Don't Send

★Datalogic 2 of 5 Check Character Transmission = Send

Datalogic 2 of 5 Length Control

This feature specifies either variable length decoding or fixed length decoding for the Datalogic 2 of 5 symbology.

Variable Length: For variable-length decoding, a minimum length may be set.

Fixed Length: For fixed-length decoding, two different lengths may be set.

★Datalogic 2 of 5 Length Control = Variable Length

Datalogic 2 of 5 Length Control = Fixed Length

Datalogic 2 of 5 Set Length 1

This feature specifies one of the bar code lengths for "Datalogic 2 of 5 Length Control" on page 192. Length 1 is the minimum label length if in Variable Length Mode, or the first fixed length if in Fixed Length Mode. The length includes the bar code's check and data characters. The length can be set from 2 to 50 characters in increments of two. See "Set Length 1" on page 355 for more detailed programming instructions.

Select Datalogic 2 of 5 Length 1 Setting

To configure this feature, scan the ENTER/EXIT PROGRAMMING MODE bar code above, then the bar code at left followed by the digits from the Alphanumeric characters in Appendix G, Keypad representing your desired character(s). End by scanning the ENTER/EXIT bar code again.

Make a mistake? Scan the CANCEL bar code to abort and not save the entry string. You can then start again at the beginning.

CANCEL

★Length 1 = 06 (6 characters)

Datalogic 2 of 5 Set Length 2

This feature specifies one of the bar code lengths for "Datalogic 2 of 5 Length Control" on page 192. Length 2 is the maximum label length if in Variable Length Mode, or the second fixed length if in Fixed Length Mode. The length includes the bar code's check and data characters. The length can be set from 2 to 50 characters. A setting of 00 specifies to ignore this length (only one fixed length). See "Set Length 2" on page 356 for more detailed programming instructions.

Select Datalogic 2 of 5 Set Length 2 Setting

To configure this feature, scan the ENTER/EXIT PROGRAMMING MODE bar code above, then the bar code at left followed by the digits from the Alphanumeric characters in Appendix G, Keypad representing your desired character(s). End by scanning the ENTER/EXIT bar code again.

Make a mistake? Scan the CANCEL bar code to abort and not save the entry string. You can then start again at the beginning.

CANCEL

★Length 2 = 50 (50 characters)

INDUSTRIAL 2 OF 5

The following options apply to the Industrial 2 of 5 symbology.

Industrial 2 of 5 Enable/Disable

When disabled, the reader will not read Industrial 2 of 5 bar codes.

★Industrial 2 of 5 = Disable

Industrial 2 of 5 = Enable

Industrial 2 of 5 Check Character Calculation

Enables/Disables calculation and verification of an optional Industrial 2 of 5 check character.

★Industrial 2 of 5 Check Character Calculation = Disable

Industrial 2 of 5 Check Character Calculation = Enable

Industrial 2 of 5 Check Character Transmission

Enables/disables transmission of an Industrial 2 of 5 check character.

Industrial 2 of 5 Check Character Transmission
= Don't Send

★Industrial 2 of 5 Check Character Transmission
= Send

Industrial 2 of 5 Length Control

This feature specifies either variable length decoding or fixed length decoding for the Industrial 2 of 5 symbology.

Variable Length: For variable-length decoding, a minimum length may be set.

Fixed Length: For fixed-length decoding, two different lengths may be set.

★Industrial 2 of 5 Length Control = Variable Length

Industrial 2 of 5 Length Control = Fixed Length

Industrial 2 of 5 Set Length 1

This feature specifies one of the bar code lengths for "Industrial 2 of 5 Length Control" on page 195. Length 1 is the minimum label length if in Variable Length Mode, or the first fixed length if in Fixed Length Mode. The length includes the bar code's check and data characters.

The length can be set from 1 to 50 characters. See "Set Length 1" on page 355 for more detailed programming instructions.

Select Industrial 2 of 5 Length 1 Setting

To configure this feature, scan the ENTER/EXIT PROGRAMMING MODE bar code above, then the bar code at left followed by the digits from the Alphanumeric characters in Appendix G, Keypad representing your desired character(s). End by scanning the ENTER/EXIT bar code again.

Make a mistake? Scan the CANCEL bar code to abort and not save the entry string. You can then start again at the beginning.

CANCEL

★Length 1 = 06 (6 characters)

Industrial 2 of 5 Set Length 2

This feature specifies one of the bar code lengths for "Industrial 2 of 5 Length Control" on page 195. Length 2 is the maximum label length if in Variable Length Mode, or the second fixed length if in Fixed Length Mode. The length includes the bar code's check and data characters.

The length can be set from 1 to 50 characters. A setting of 00 specifies to ignore this length (only one fixed length). See "Set Length 2" on page 356 for more detailed programming instructions.

Select Industrial 2 of 5 Set Length 2 Setting

To configure this feature, scan the ENTER/EXIT PROGRAMMING MODE bar code above, then the bar code at left followed by the digits from the Alphanumeric characters in Appendix G, Keypad representing your desired character(s). End by scanning the ENTER/EXIT bar code again.

Make a mistake? Scan the CANCEL bar code to abort and not save the entry string. You can then start again at the beginning.

CANCEL

★Length 2 = 50 (50 characters)

IATA

The following options apply to the IATA symbology.

IATA Enable/Disable

Enables/Disables the ability of the reader to decode IATA labels.

★IATA = Disable

IATA = Enable

IATA Check Character Transmission

Enables/Disables calculation and verification of an optional IATA check character.

IATA Check Character Transmission = Don't Send

★IATA Check Character Transmission = Send

FOLLETT 2 OF 5

The following options apply to the Follett 2 of 5 symbology.

Follett 2 of 5 Enable/Disable

Enables/Disables ability of reader to decode Follett 2 of 5 labels.

★Follett 2 of 5 = Disable

Follett 2 of 5 = Enable

CODABAR

The following options apply to the Codabar symbology.

Codabar Enable/Disable

When disabled, the reader will not read Codabar bar codes.

★Codabar = Disable

Codabar = Enable

Codabar Check Character Calculation

This option enables/disables calculation and verification of an optional Codabar check character. When disabled, any check characters in the label are treated as data characters.

★Codabar Check Character Calculation = Disable

Codabar Check Character Calculation
= Calculate AIM Std Check

Codabar Check Character Calculation
= Calculate Modulo 10 Check

Codabar Check Character Calculation
= Calculate NW-7 Check

Codabar Check Character Transmission

Enable this option to transmit the check character along with Codabar bar code data.

NOTE: This feature is valid only when Codabar Check Character Calculation is enabled.

Codabar Check Character Transmission
= Don't Send

★Codabar Check Character Transmission
= Send

Codabar Start/Stop Character Transmission

This option enables/disables transmission of Codabar start and stop characters.

Codabar Start/Stop Character Transmission
= Don't Transmit

★Codabar Start/Stop Character Transmission
= Transmit

Codabar Start/Stop Character Set

This option specifies the format of transmitted Codabar start/stop characters.

Codabar Check Character Set = ABCD/TN*E

Codabar Check Character Set = ABCD/ABCD

Codabar Check Character Set = abcd/tn*e

★Codabar Check Character Set = abcd/abcd

Codabar Start/Stop Character Match

When enabled, this option requires that start and stop characters match

★Codabar Start/Stop Character Match = Don't Require Match

Codabar Start/Stop Character Match = Require Match

Codabar Quiet Zones

This feature specifies the number of quiet zones for Codabar labels. Quiet zones are blank areas at the ends of a bar code and are typically 10 times the width of the narrowest bar or space in the label.

Codabar Quiet Zones = Quiet Zone on one side

★Codabar Quiet Zones = Quiet Zones on two sides

Codabar Quiet Zones = Auto

Codabar Quiet Zones = Virtual Quiet Zones on two sides

Codabar Quiet Zones = Small Quiet Zones on two sides

Codabar Length Control

This feature specifies either variable length decoding or fixed length decoding for the Codabar symbology.

Variable Length: For variable-length decoding, a minimum length may be set.

Fixed Length: For fixed-length decoding, two different lengths may be set.

★Codabar Length Control = Variable Length

Codabar Length Control = Fixed Length

Codabar Set Length 1

This feature specifies one of the bar code lengths for "Codabar Length Control" on page 203. Length 1 is the minimum label length if in Variable Length Mode, or the first fixed length if in Fixed Length Mode. Length includes the bar code's start, stop, check and data characters. The length must include at least one data character.

The length can be set from 3 to 50 characters. See "Set Length 1" on page 355 for more detailed programming instructions.

Select Codabar Length 1 Setting

To configure this feature, scan the ENTER/EXIT PROGRAMMING MODE bar code above, then the bar code at left followed by the digits from the Alphanumeric characters in Appendix G, Keypad representing your desired character(s). End by scanning the ENTER/EXIT bar code again.

Make a mistake? Scan the CANCEL bar code to abort and not save the entry string. You can then start again at the beginning.

CANCEL

★Length 1 = 03 (3 characters)

Codabar Set Length 2

This feature specifies one of the bar code lengths for "Codabar Length Control" on page 203. Length 2 is the maximum label length if in Variable Length Mode, or the second fixed length if in Fixed Length Mode. The length includes the bar code's start, stop, check and data characters. The length must include at least one data character.

The length can be set from 3 to 50 characters. A setting of 00 specifies to ignore this length (only one fixed length). See "Set Length 2" on page 356 for more detailed programming instructions.

Select Codabar Length 2 Setting

To configure this feature, scan the ENTER/EXIT PROGRAMMING MODE bar code above, then the bar code at left followed by the digits from the Alphanumeric characters in Appendix G, Keypad representing your desired character(s). End by scanning the ENTER/EXIT bar code again.

Make a mistake? Scan the CANCEL bar code to abort and not save the entry string. You can then start again at the beginning.

CANCEL

★Length 2 = 50 (50 characters)

ABC CODABAR

The following options apply to the ABC Codabar symbology.

ABC Codabar Enable/Disable

Enables/Disables ability of reader to decode ABC Codabar labels.

★ABC Codabar = Disable

ABC Codabar = Enable

ABC Codabar Concatenation Mode

Specifies the concatenation mode between Static and Dynamic.

★ABC Codabar Contatenation Mode = Static

ABC Codabar Concatenation Mode = Dynamic

ABC Codabar Dynamic Concatenation Timeout

This parameter specifies the timeout in 10-millisecond ticks used by the ABC Codabar Dynamic Concatenation Mode. The timeout can be set within a range of 05 to 255 in 10ms increments. A setting of zero specifies no delay.

Select ABC Codabar Dynamic Concatenation Timeout Setting

To configure this feature, scan the ENTER/EXIT PROGRAMMING MODE bar code above, then the bar code at left followed by the digits from the Alphanumeric characters in Appendix G, Keypad representing your desired character(s). End by scanning the ENTER/EXIT bar code again.

Make a mistake? Scan the CANCEL bar code to abort and not save the entry string. You can then start again at the beginning.

CANCEL

★Timeout = 20 (200 msec)

ABC Codabar Force Concatenation

When ABC Codabar Concatenation is enabled and Force Concatenation is disabled, both Codabar stand alone labels and ABC Codabar concatenated labels are transmitted. When ABC Codabar Concatenation is enabled and Force Concatenation is enabled only ABC Codabar concatenated labels are transmitted while Codabar stand alone labels are not transmitted.

Force Concatenation has no effect if the ABC Codabar Concatenation is disabled. The Force Concatenation mode has effect both in Static and Dynamic Concatenation Modes.

★ABC Codabar Force Contatenation = Disable

ABC Codabar Force Concatenation = Enable

ISBT 128

The following options apply to the ISBT 128 symbology.

ISBT 128 Concatenation

Enables/disables ISBT 128 concatenation of 2 labels.

★ISBT 128 Concatenation = Disable

ISBT 128 Concatenation = Enable

ISBT 128 Concatenation Mode

Specifies the concatenation mode between Static and Dynamic.

★ISBT 128 Contatenation Mode = Static

ISBT 128 Concatenation Mode = Dynamic

ISBT 128 Dynamic Concatenation Timeout

Specifies the timeout used by the ISBT 128 Dynamic Concatenation Mode.

ISBT 128 Dynamic Concatenation Timeout = 50 msec

ISBT 128 Dynamic Concatenation Timeout = 100 msec

★ISBT 128 Dynamic Concatenation Timeout = 200 msec

ISBT 128 Dynamic Concatenation Timeout = 500 msec

ISBT 128 Dynamic Concatenation Timeout = 750 msec

ISBT 128 Dynamic Concatenation Timeout = 1 second

ISBT 128 Force Concatenation

When enabled, this feature forces all ISBT 128 labels to be concatenated.

NOTE: This option is only valid when "ISBT 128 Concatenation" on page 207 **is enabled.**

★ISBT 128 Force Contatenation = Disable

ISBT 128 Force Concatenation = Enable

ISBT 128 Advanced Concatenation Options

NOTE: Use the Datalogic Aladdin configuration application or Contact Customer Support to set up pairs of label types for concatenation.

CODE 11

The following options apply to the Code 11 symbology.

Code 11 Enable/Disable

When disabled, the reader will not read Code 11 bar codes.

★Code 11 = Disable

Code 11 = Enable

Code 11 Check Character Calculation

This option enables/disables calculation and verification of optional Code 11 check character.

Code 11 Check Character Calculation = Disable

Code 11 Check Character Calculation = Calculate Check C

Code 11 Check Character Calculation = Calculate Check K

★Code 11 Check Character Calculation = Calculate Check C and K

Code 11 Check Character Transmission

This feature enables/disables transmission of an optional Code 11 check character.

Code 11 Check Character Transmission = Don't Send

★Code 11 Check Character Transmission = Send

Code 11 Length Control

This feature specifies either variable length decoding or fixed length decoding for the Code 11 symbology.

Variable Length: For variable-length decoding, a minimum length may be set.

Fixed Length: For fixed-length decoding, two different lengths may be set.

★Code 11 Length Control = Variable Length

Code 11 Length Control = Fixed Length

Code 11 Set Length 1

This feature specifies one of the bar code lengths for "Code 11 Length Control" on page 211. Length 1 is the minimum label length if in Variable Length Mode, or the first fixed length if in Fixed Length Mode. Length includes the bar code's check and data characters.

The length can be set from 2 to 50 characters. See "Set Length 1" on page 355 for more detailed programming instructions.

Select Code 11 Length 1 Setting

To configure this feature, scan the ENTER/EXIT PROGRAMMING MODE bar code above, then the bar code at left followed by the digits from the Alphanumeric characters in Appendix G, Keypad representing your desired character(s). End by scanning the ENTER/EXIT bar code again.

Make a mistake? Scan the CANCEL bar code to abort and not save the entry string. You can then start again at the beginning.

CANCEL

★Length 1 = 04 (4 characters)

Code 11 Set Length 2

This feature specifies one of the bar code lengths for "Code 11 Length Control" on page 211. Length 2 is the maximum label length if in Variable Length Mode, or the second fixed length if in Fixed Length Mode. Length includes the bar code's check and data characters.

The length can be set from 2 to 50 characters. A setting of 00 specifies to ignore this length (only one fixed length). See "Set Length 2" on page 356 for more detailed programming instructions.

Select Code 11 Length 2 Setting

To configure this feature, scan the ENTER/EXIT PROGRAMMING MODE bar code above, then the bar code at left followed by the digits from the Alphanumeric characters in Appendix G, Keypad representing your desired character(s). End by scanning the ENTER/EXIT bar code again.

Make a mistake? Scan the CANCEL bar code to abort and not save the entry string. You can then start again at the beginning.

CANCEL

★Length 2 = 50 (50 characters)

CODE 93

The following options apply to the Code 93 symbology.

Code 93 Enable/Disable

Enables/Disables ability of reader to decode Code 93 labels.

★Code 93 = Disable

Code 93 = Enable

Code 93 Check Character Calculation

This option enables/disables calculation and verification of optional Code 93 check character.

Code 93 Check Character Calculation = Disable

Code 93 Check Character Calculation = Calculate Check C

Code 93 Check Character Calculation
= Calculate Check K

★Code 93 Check Character Calculation
= Calculate Check C and K

Code 93 Check Character Transmission

This feature enables/disables transmission of an optional Code 93 check character.

★Code 93 Check Character Transmission = Don't Send

Code 93 Check Character Transmission = Send

Code 93 Length Control

This feature specifies either variable length decoding or fixed length decoding for the Code 93 symbology.

Variable Length: For variable-length decoding, a minimum length may be set.

Fixed Length: For fixed-length decoding, two different lengths may be set.

★Code 93 Length Control = Variable Length

Code 93 Length Control = Fixed Length

Code 93 Set Length 1

This feature specifies one of the bar code lengths for "Code 93 Length Control" on page 214. Length 1 is the minimum label length if in Variable Length Mode, or the first fixed length if in Fixed Length Mode. Length includes the bar code's check and data characters.

The length can be set from 1 to 50 characters. See "Set Length 1" on page 355 for more detailed programming instructions.

Select Code 93 Length 1 Setting

To configure this feature, scan the ENTER/EXIT PROGRAMMING MODE bar code above, then the bar code at left followed by the digits from the Alphanumeric characters in Appendix G, Keypad representing your desired character(s). End by scanning the ENTER/EXIT bar code again.

Make a mistake? Scan the CANCEL bar code to abort and not save the entry string. You can then start again at the beginning.

CANCEL

★Length 1 = 01 (one character)

Code 93 Set Length 2

This feature specifies one of the bar code lengths for "Code 93 Length Control" on page 214. Length 2 is the maximum label length if in Variable Length Mode, or the second fixed length if in Fixed Length Mode. The length includes the bar code's check and data characters.

The length can be set from 1 to 50 characters. A setting of 00 specifies to ignore this length (only one fixed length). See "Set Length 2" on page 356 for more detailed programming instructions.

Select Code 93 Length 2 Setting

To configure this feature, scan the ENTER/EXIT PROGRAMMING MODE bar code above, then the bar code at left followed by the digits from the Alphanumeric characters in Appendix G, Keypad representing your desired character(s). End by scanning the ENTER/EXIT bar code again.

Make a mistake? Scan the CANCEL bar code to abort and not save the entry string. You can then start again at the beginning.

CANCEL

★Length 2 = 50 (50 characters)

Code 93 Quiet Zones

This feature specifies the number of quiet zones for Code 93 labels. Quiet zones are blank areas at the ends of a bar code and are typically 10 times the width of the narrowest bar or space in the label.

Code 93 Quiet Zones = No Quiet Zones

Code 93 Quiet Zones = Quiet Zone on one side

Code 93 Quiet Zones = Quiet Zones on two sides

★Code 93 Quiet Zones = Auto

Code 93 Quiet Zones = Virtual Quiet Zones on two sides

MSI

The following options apply to the MSI symbology.

MSI Enable/Disable

Enables/Disables ability of reader to decode MSI labels.

★MSI = Disable

MSI = Enable

MSI Check Character Calculation

Enables/Disables calculation and verification of an optional MSI check character.

MSI Check Character Calculation = Disable

★MSI Check Character Calculation = Calculate Mod 10

MSI Check Character Calculation
= Calculate Mod 11/10

MSI Check Character Calculation
= Calculate Mod 10/10

MSI Check Character Transmission

Enables/disables transmission of an MSI check character.

MSI Check Character Transmission = Don't Send

★MSI Check Character Transmission = Send

MSI Length Control

This feature specifies either variable length decoding or fixed length decoding for the MSI symbology.

Variable Length: For variable-length decoding, a minimum length may be set.

Fixed Length: For fixed-length decoding, two different lengths may be set.

★MSI Length Control = Variable Length

MSI Length Control = Fixed Length

MSI Set Length 1

This feature specifies one of the bar code lengths for "MSI Length Control" on page 218. Length 1 is the minimum label length if in Variable Length Mode, or the first fixed length if in Fixed Length Mode. Length includes the bar code's data characters only.

The length can be set from 1 to 50 characters. See "Set Length 1" on page 355 for more detailed programming instructions.

Select MSI Length 1 Setting

To configure this feature, scan the ENTER/EXIT PROGRAMMING MODE bar code above, then the bar code at left followed by the digits from the Alphanumeric characters in Appendix G, Keypad representing your desired character(s). End by scanning the ENTER/EXIT bar code again.

Make a mistake? Scan the CANCEL bar code to abort and not save the entry string. You can then start again at the beginning.

CANCEL

★Length 1 = 01 (one character)

MSI Set Length 2

This feature specifies one of the bar code lengths for "MSI Length Control" on page 218. Length 2 is the maximum label length if in Variable Length Mode, or the second fixed length if in Fixed Length Mode. The length includes the bar code's data characters only.

The length can be set from 1 to 50 characters. A setting of 00 specifies to ignore this length (only one fixed length). See "Set Length 2" on page 356 for more detailed programming instructions.

Select MSI Length 2 Setting

To configure this feature, scan the ENTER/EXIT PROGRAMMING MODE bar code above, then the bar code at left followed by the digits from the Alphanumeric characters in Appendix G, Keypad representing your desired character(s). End by scanning the ENTER/EXIT bar code again.

Make a mistake? Scan the CANCEL bar code to abort and not save the entry string. You can then start again at the beginning.

CANCEL

★Length 2 = 50 (50 characters)

PHARMACODE

The following options apply to the Pharmacode symbology.

Pharmacode Enable/Disable

Enables/Disables ability of reader to decode Pharmacode labels.

★Pharmacode = Disable

Pharmacode = Enable

Pharmacode Label Direction

This feature specifies the direction in which labels are decoded.

★Pharmacode Label Direction = Horizontal left to righ

Pharmacode Label Direction = Horizontal right to left

Pharmacode Label Direction =
=Vertical top down

Pharmacode Label Direction =
Vertical bottom up

Pharmacode Length Control

This feature specifies either variable length decoding or fixed length decoding for the Pharmacode symbology.

Variable Length: For variable-length decoding, a minimum length may be set.

Fixed Length: For fixed-length decoding, two different lengths may be set.

★Pharmacode Length Control = Variable Length

Pharmacode Length Control = Fixed Length

Pharmacode Set Length 1

This feature specifies one of the bar code lengths for "Pharmacode Length Control" on page 221. Length 1 is the minimum label length if in Variable Length Mode, or the first fixed length if in Fixed Length Mode. Length includes the bar code's data characters only.

The length can be set from 2 to 6 characters. See "Set Length 1" on page 355 for more detailed programming instructions.

Select Pharmacode Length 1 Setting

To configure this feature, scan the ENTER/EXIT PROGRAMMING MODE bar code above, then the bar code at left followed by the digits from the Alphanumeric characters in Appendix G, Keypad representing your desired character(s). End by scanning the ENTER/EXIT bar code again.

Make a mistake? Scan the CANCEL bar code to abort and not save the entry string. You can then start again at the beginning.

CANCEL

★Length 1 = 02 (two characters)

Pharmacode Set Length 2

This feature specifies one of the bar code lengths for "Pharmacode Length Control" on page 221. Length 2 is the maximum label length if in Variable Length Mode, or the second fixed length if in Fixed Length Mode. The length includes the bar code's data characters only.

The length can be set from 2 to 6 characters. A setting of 00 specifies to ignore this length (only one fixed length). See "Set Length 2" on page 356 for more detailed programming instructions.

Select Pharmacode Length 2 Setting

To configure this feature, scan the ENTER/EXIT PROGRAMMING MODE bar code above, then the bar code at left followed by the digits from the Alphanumeric characters in Appendix G, Keypad representing your desired character(s). End by scanning the ENTER/EXIT bar code again.

Make a mistake? Scan the CANCEL bar code to abort and not save the entry string. You can then start again at the beginning.

CANCEL

★Length 2 = 6 (six characters)

PLESSEY

The following options apply to the Plessey symbology.

Plessey Enable/Disable

Enables/Disables ability of reader to decode Plessey labels.

★Plessey = Disable

Plessey = Enable

Plessey Check Character Calculation

Enables/Disables calculation and verification of a Plessey check character.

Plessey Check Character Calculation = Disable

★Plessey Check Character Calculation
= Plessey std check char. verification

Plessey Check Character Calculation
= Anker check char. verification

Plessey Check Character Calculation
= Plessey std and Anker check char. verification

Plessey Check Character Transmission

Enables/disables transmission of a Plessey check character.

Plessey Check Character Transmission = Don't Send

★Plessey Check Character Transmission = Send

Plessey Length Control

This feature specifies either variable length decoding or fixed length decoding for the Plessey symbology.

Variable Length: For variable-length decoding, a minimum length may be set.

Fixed Length: For fixed-length decoding, two different lengths may be set.

★Plessey Length Control = Variable Length

Plessey Length Control = Fixed Length

Plessey Set Length 1

This feature specifies one of the bar code lengths for "Plessey Length Control" on page 224. Length 1 is the minimum label length if in Variable Length Mode, or the first fixed length if in Fixed Length Mode. The length includes the bar code's check and data characters.

The length can be set from 1 to 50 characters. See "Set Length 1" on page 355 for more detailed programming instructions.

Select Plessey Length 1 Setting

To configure this feature, scan the ENTER/EXIT PROGRAMMING MODE bar code above, then the bar code at left followed by the digits from the Alphanumeric characters in Appendix G, Keypad representing your desired character(s). End by scanning the ENTER/EXIT bar code again.

Make a mistake? Scan the CANCEL bar code to abort and not save the entry string. You can then start again at the beginning.

CANCEL

★Length 1 = 01 (one character)

Plessey Set Length 2

This feature specifies one of the bar code lengths for "Plessey Length Control" on page 224. Length 2 is the maximum label length if in Variable Length Mode, or the second fixed length if in Fixed Length Mode. The length includes the bar code's check and data characters.

Length can be set from 1 to 50 characters. A setting of 00 specifies to ignore this length (only one fixed length). See "Set Length 2" on page 356 for more detailed programming instructions.

Select Plessey Length 2 Setting

To configure this feature, scan the ENTER/EXIT PROGRAMMING MODE bar code above, then the bar code at left followed by the digits from the Alphanumeric characters in Appendix G, Keypad representing your desired character(s). End by scanning the ENTER/EXIT bar code again.

Make a mistake? Scan the CANCEL bar code to abort and not save the entry string. You can then start again at the beginning.

CANCEL

★Length 2 = 50 (50 characters)

BC412

The following options apply to the BC412 symbology.

BC412 Enable/Disable

Enables/Disables ability of reader to decode BC412 labels.

★BC412 = Disable

BC412 = Enable

BC412 Check Character Calculation

Enable this option to enable/disable calculation and verification of an optional BC412 check character. When disabled, any check character in the label is treated as a data character.

BC412 Check Character Calculation = Disable

★BC412 Check Character Calculation = Calculate

BC412 Length Control

This feature specifies either variable length decoding or fixed length decoding for the BC412 symbology.

Variable Length: For variable-length decoding, a minimum length may be set.

Fixed Length: For fixed-length decoding, two different lengths may be set.

★BC412 Length Control = Variable Length

BC412 Length Control = Fixed Length

BC412 Set Length 1

This feature specifies one of the bar code lengths for "BC412 Length Control" on page 227. Length 1 is the minimum label length if in Variable Length Mode, or the first fixed length if in Fixed Length Mode. Length includes the bar code's data characters only.

The length can be set from 01 to 50 characters. See "Set Length 1" on page 355 for more detailed programming instructions.

Select BC412 Length 1 Setting

To configure this feature, scan the ENTER/EXIT PROGRAMMING MODE bar code above, then the bar code at left followed by the digits from the Alphanumeric characters in Appendix G, Keypad representing your desired character(s). End by scanning the ENTER/EXIT bar code again.

Make a mistake? Scan the CANCEL bar code to abort and not save the entry string. You can then start again at the beginning.

CANCEL

★Length 1 = 01 (one character)

BC412 Set Length 2

This feature specifies one of the bar code lengths for "BC412 Length Control" on page 227. Length 2 is the maximum label length if in Variable Length Mode, or the second fixed length if in Fixed Length Mode. Length includes the bar code's data characters only.

The length can be set from 01 to 50 characters. A setting of 00 specifies to ignore this length (only one fixed length). See "Set Length 2" on page 356 for more detailed programming instructions.

Select BC412 Length 2 Setting

To configure this feature, scan the ENTER/EXIT PROGRAMMING MODE bar code above, then the bar code at left followed by the digits from the Alphanumeric characters in Appendix G, Keypad representing your desired character(s). End by scanning the ENTER/EXIT bar code again.

Make a mistake? Scan the CANCEL bar code to abort and not save the entry string. You can then start again at the beginning.

CANCEL

★Length 2 = 50 (50 characters)

CONFIGURATION | 2D SYMBOLOGIES

SECTION CONTENTS

- **2D GLOBAL FEATURES** starting on page 230
- **AZTEC CODE** starting on page 234
- **CHINA SENSIBLE CODE** starting on page 236
- **DATA MATRIX** starting on page 238
- **GS1 DOTCODE** starting on page 241
- **MAXICODE** starting on page 243
- **PDF417** starting on page 246
- **PDF417** starting on page 246
- **DIGIMARC** starting on page 258
- **MICRO PDF417** starting on page 248
- **QR CODE** starting on page 251
- **MICRO QR CODE** starting on page 253
- **UCC COMPOSITE** starting on page 255
- **PDF417** starting on page 246

The reader supports the following 2D symbologies (bar code types). Symbology-dependent options for each symbology are included in this chapter.
See 1D Symbologies, starting on page 140 for configuration of 1D bar codes.

2D GLOBAL FEATURES

The following features are common to all, or in some cases, most of the available 2D symbologies. Default settings are indicated at each feature/option with a star. Also reference Appendix C, Standard Defaults for a listing of the most widely used set of standard factory settings. That section also provides space to record any custom settings needed or implemented for your system.

To set most features:

1. Scan the ENTER/EXIT PROGRAMMING bar code at the top of applicable programming pages.
2. Scan the correct bar code to set the desired programming feature or parameter. You may need to cover unused bar codes on the page, and possibly the facing page, to ensure that the reader reads only the bar code you intend to scan.
3. If additional input parameters are needed, go to Appendix G, Keypad, and scan the appropriate characters from the keypad.

NOTE: Additional information about many features can be found in the "References" chapter.

If you make a mistake before the last character, scan the CANCEL bar code to abort and not save the entry string. You can then start again at the beginning.

Complete the programming sequence by scanning the ENTER/EXIT PROGRAMMING bar code to exit Programming Mode.

2D Maximum Decoding Time

This feature specifies the maximum amount of time the software will spend attempting to decode a 2D label. The selectable range is 10 milliseconds to 2.55 milliseconds.

2D Maximum Decoding Time = Unlimited

2D Maximum Decoding Time = Shortest

2D Maximum Decoding Time = Short

★2D Maximum Decoding Time = Normal

2D Maximum Decoding Time = Long

2D Maximum Decoding Time = Longest

2D Structured Append

Enables/disables ability of reader to append multiple 2D Codes labels in a structured format. The structured append property is globally applied to the following symbologies, if these are enabled:

- Data Matrix
- Aztec
- QR Code
- PDF 417

★Structured Append = Disable

Structured Append = Enable

2D Normal/Inverse Symbol Control

Specifies the options available for decoding normal/negative printed 2D symbols. This configuration item applies globally to all the 2D symbologies that support that feature according to Standard AIM Specification: Data Matrix, QR, MicroQR, Aztec and Chinese Sensible Code.

Normal/Inverse Symbol Control = Normal

★Normal/Inverse Symbol Control = Both Normal and Inverse

Decoding Normal/Mirrored Labels

Specifies the options available for decoding normal/mirrored labels on one of the two axes. This feature pertains mainly to 2D barcodes: Data Matrix, Maxicode, QR Code Aztec and PDF-417. All 1D codes can be read backwards without changing settings.

NOTE: Unlike some programming features and options, Mirror Reading Mode requires that you scan only one programming bar code label. DO NOT scan an ENTER/EXIT bar code prior to scanning a Mirror Reading Mode bar code.

CAUTION: When this feature is enabled, you will be unable to read other programming labels in this manual.

★Mirror Reading Mode = Disable

Mirror Reading Mode = Read only Mirrored barcodes

Mirror Reading Mode =
Read both Normal and Mirrored barcodes

AZTEC CODE

Aztec Code Enable / Disable

Enables/disables the ability of the reader to decode Aztec Code labels.

Aztec Code = Disable

★Aztec Code = Enable

Aztec Code Length Control

This feature specifies either variable length decoding or fixed length decoding for this symbology.

Variable Length: For variable length decoding, a minimum and maximum length may be set.

Fixed Length: For fixed length decoding, two different lengths may be set.

★Aztec Code Length Control = Variable Length

Aztec Code Length Control = Fixed Length

Aztec Code Set Length 1

Specifies one of the bar code lengths for "Aztec Code Length Control" on page 234.

Length 1 is the minimum label length if in Variable Length Mode, or the first fixed length if in Fixed Length Mode. Characters can be set from 0001 to 3,832 characters in increments of 0001 (pad with zeroes).

See "Set Length 1" on page 355 for detailed instructions on setting this feature.

Select Aztec Code Length 1 Setting

To configure this feature, scan the ENTER/EXIT PROGRAMMING MODE bar code above, then the bar code at left followed by the digits from the Alphanumeric characters in Appendix G, Keypad representing your desired character(s). End by scanning the ENTER/EXIT bar code again.

Make a mistake? Scan the CANCEL bar code to abort and not save the entry string. You can then start again at the beginning.

CANCEL

★0001 = Length 1 is 1 Character

Aztec Code Set Length 2

Specifies one of the bar code lengths for "Aztec Code Length Control" on page 234.

Length 2 is the minimum label length if in Variable Length Mode, or the first fixed length if in Fixed Length Mode. Characters can be set from 0001 to 3,832 characters in increments of 0001 (pad with zeroes).

See "Set Length 2" on page 356 for detailed instructions on setting this feature.

Select Aztec Code Length 2 Setting

To configure this feature, scan the ENTER/EXIT PROGRAMMING MODE bar code above, then the bar code at left followed by the digits from the Alphanumeric characters in Appendix G, Keypad representing your desired character(s). End by scanning the ENTER/EXIT bar code again.

Make a mistake? Scan the CANCEL bar code to abort and not save the entry string. You can then start again at the beginning.

CANCEL

★Length 2 is 3,832 Characters

CHINA SENSIBLE CODE

China Sensible Code Enable / Disable

Enables/disables the ability of the reader to decode China Sensible Code labels.

★China Sensible Code = Disable

China Sensible Code = Enable

China Sensible Code Length Control

This feature specifies either variable length decoding or fixed length decoding for this symbology.

Variable Length: For variable length decoding, a minimum and maximum length may be set.

Fixed Length: For fixed length decoding, two different lengths may be set.

★China Sensible Code Length Control = Variable Length

China Sensible Code Length Control = Fixed Length

China Sensible Code Set Length 1

Specifies one of the bar code lengths for "China Sensible Code Length Control" on page 236. Length 1 is the minimum label length if in Variable Length Mode, or the first fixed length if in Fixed Length Mode. Characters can be set from 0001 to 7,827 characters in increments of 0001 (pad with zeroes).

See "Set Length 1" on page 355 for detailed instructions on setting this feature.

Select China Sensible Code Length 1 Setting

To configure this feature, scan the ENTER/EXIT PROGRAMMING MODE bar code above, then the bar code at left followed by the digits from the Alphanumeric characters in Appendix G, Keypad representing your desired character(s). End by scanning the ENTER/EXIT bar code again.

Make a mistake? Scan the CANCEL bar code to abort and not save the entry string. You can then start again at the beginning.

CANCEL

★0001 = Length 1 is 1 Character

China Sensible Code Set Length 2

This feature specifies one of the bar code lengths for "China Sensible Code Length Control" on page 236. Length 2 is the maximum label length if in Variable Length Mode, or the second fixed length if in Fixed Length Mode. Characters can be set from 0001 to 7,827 characters in increments of 0001 (pad with zeroes).

See "Set Length 2" on page 356 for detailed instructions on setting this feature.

Select China Sensible Code Length 2 Setting

To configure this feature, scan the ENTER/EXIT PROGRAMMING MODE bar code above, then the bar code at left followed by the digits from the Alphanumeric characters in Appendix G, Keypad representing your desired character(s). End by scanning the ENTER/EXIT bar code again.

Make a mistake? Scan the CANCEL bar code to abort and not save the entry string. You can then start again at the beginning.

CANCEL

★Length 2 is 7,827 Characters

DATA MATRIX

Data Matrix Enable / Disable

Enables/disables ability of reader to decode Data Matrix labels.

Data Matrix = Disable

★Data Matrix = Enable

Data Matrix Square/Rectangular Style

Specifies the options available when reading Data Matrix with different form factors. Choices are:

- Square Style
- Rectangular Style
- Both Square and Rectangular Style

The configuration item can also be configured as a bit mask to filter one or more Data Matrix labels with different symbol size and shape styles.

Data Matrix Dimensions Mask = Square Style

Data Matrix Dimensions Mask = Rectangular Style

★Data Matrix Dimensions Mask = Both Square and Rectangular Style

Data Matrix Length Control

This feature specifies either variable length decoding or fixed length decoding for this symbology.

Variable Length: For variable length decoding, a minimum and maximum length may be set.

Fixed Length: For fixed length decoding, two different lengths may be set.

★Data Matrix Length Control = Variable Length

Data Matrix Length Control = Fixed Length

Data Matrix Set Length 1

This feature specifies one of the bar code lengths for "Data Matrix Length Control" on page 239. Length 1 is the minimum label length if in Variable Length Mode, or the first fixed length if in Fixed Length Mode. Characters can be set from 0001 to 3,116 characters in increments of 0001 (pad with zeroes).

See "Set Length 1" on page 355 for detailed instructions on setting this feature.

Select Data Matrix Length 1 Setting

To configure this feature, scan the ENTER/EXIT PROGRAMMING MODE bar code above, then the bar code at left followed by the digits from the Alphanumeric characters in Appendix G, Keypad representing your desired character(s). End by scanning the ENTER/EXIT bar code again.

Make a mistake? Scan the CANCEL bar code to abort and not save the entry string. You can then start again at the beginning.

CANCEL

★0001 = Length 1 is 1 Character

Data Matrix Set Length 2

This feature specifies one of the bar code lengths for "Data Matrix Length Control" on page 239. Length 2 is the maximum label length if in Variable Length Mode, or the second fixed length if in Fixed Length Mode. Characters can be set from 0001 to 3,116 characters in increments of 0001 (pad with zeroes).

See "Set Length 2" on page 356 for detailed instructions on setting this feature.

Select Data Matrix Length 2 Setting

To configure this feature, scan the ENTER/EXIT PROGRAMMING MODE bar code above, then the bar code at left followed by the digits from the Alphanumeric characters in Appendix G, Keypad representing your desired character(s). End by scanning the ENTER/EXIT bar code again.

Make a mistake? Scan the CANCEL bar code to abort and not save the entry string. You can then start again at the beginning.

CANCEL

★Length 2 is 3,116 Characters

GS1 DOTCODE

The following options apply for the DotCode barcode decoding

DotCode Enable

This options enables/disables the ability of the reader to decode DotCode barcodes.

DotCode = Enable

★DotCode = Disable

DotCode High Resolution Enable

This options improves the decoding performance for very small module size barcodes, e.g. tobacco products.

★DotCode High Resolution = Enable

DotCode High Resolution = Disable

DotCode Position-based Decoding

This option can improve the decoding performance when the next barcode to be decoded is approximately shown in the same position as the previous one.

DotCode Position-based Decoding = Enable

★DotCode Position-based Decoding = Disable

Additional Options

To improve performances the following additional settings are available using Aladdin configuration utility, downloadable from www.datalogic.com.

- Dot Size
- Fixed Length or Variable Length
- Min and Max barcode size

MAXICODE

Maxicode Enable / Disable

Enables/disables ability of reader to decode Maxicode labels.

★Maxicode = Disable

Maxicode = Enable

Maxicode Primary Message Transmission

Enables/disables the transmission of only the Primary Message when the Secondary Message is not readable.

★Maxicode Primary Message Transmission = Disable

Maxicode Primary Message Transmission = Enable

Maxicode Length Control

This feature specifies either variable length decoding or fixed length decoding for this symbology.

Variable Length: For variable length decoding, a minimum and maximum length may be set.

Fixed Length: For fixed length decoding, two different lengths may be set.

★Maxicode Length Control = Variable Length

Maxicode Length Control = Fixed Length

Maxicode Set Length 1

Specifies one of the bar code lengths for "Maxicode Length Control" on page 244. Length 1 is the minimum label length if in Variable Length Mode, or the first fixed length if in Fixed Length Mode. Characters can be set from 0001 to 0145 characters in increments of 0001 (pad with zeroes).

See "Set Length 1" on page 355 for detailed instructions on setting this feature.

Select Maxicode Length 1 Setting

To configure this feature, scan the ENTER/EXIT PROGRAMMING MODE bar code above, then the bar code at left followed by the digits from the Alphanumeric characters in Appendix G, Keypad representing your desired character(s). End by scanning the ENTER/EXIT bar code again.

Make a mistake? Scan the CANCEL bar code to abort and not save the entry string. You can then start again at the beginning.

CANCEL

★0001 = Length 1 is 1 Character

Maxicode Set Length 2

This feature specifies one of the bar code lengths for "Maxicode Length Control" on page 244. Length 2 is the maximum label length if in Variable Length Mode, or the second fixed length if in Fixed Length Mode. Characters can be set from 0001 to 0145 characters in increments of 0001 (pad with zeroes).

See "Set Length 2" on page 356 for detailed instructions on setting this feature.

Select Maxicode Length 2 Setting

To configure this feature, scan the ENTER/EXIT PROGRAMMING MODE bar code above, then the bar code at left followed by the digits from the Alphanumeric characters in Appendix G, Keypad representing your desired character(s). End by scanning the ENTER/EXIT bar code again.

Make a mistake? Scan the CANCEL bar code to abort and not save the entry string. You can then start again at the beginning.

CANCEL

★Length 2 is 0145 Characters

PDF417

PDF417 Enable / Disable

Enables/disables the ability of the reader to decode PDF417 labels.

PDF417 = Disable

★PDF417 = Enable

PDF417 Length Control

This feature specifies either variable length decoding or fixed length decoding for this symbology.

Variable Length: For variable length decoding, a minimum and maximum length may be set.

Fixed Length: For fixed length decoding, two different lengths may be set.

★PDF417 Length Control = Variable Length

PDF417 Length Control = Fixed Length

PDF417 Set Length 1

Specifies one of the bar code lengths for "PDF417 Length Control" on page 246. Length 1 is the minimum label length if in Variable Length Mode, or the first fixed length if in Fixed Length Mode. Length includes the bar code's data characters only. Characters can be set from 0001 to 2,710 characters (pad with zeroes) in increments of 01. Any value greater than 2,710 will be considered to be 2,710.

See"Set Length 1" on page 355 for detailed instructions on setting this feature.

Select PDF417 Length 1 Setting

To configure this feature, scan the ENTER/EXIT PROGRAMMING MODE bar code above, then the bar code at left followed by the digits from the Alphanumeric characters in Appendix G, Keypad representing your desired character(s). End by scanning the ENTER/EXIT bar code again.

Make a mistake? Scan the CANCEL bar code to abort and not save the entry string. You can then start again at the beginning.

CANCEL

★0001 = Length 1 is 1 Character

PDF417 Set Length 2

This feature specifies one of the bar code lengths for "PDF417 Length Control" on page 246. Length 2 is the maximum label length if in Variable Length Mode, or the second fixed length if in Fixed Length Mode. Length includes the bar code's check, data, and full-ASCII shift characters. The length does not include start/stop characters. Characters can be set from 01 to 2,710 characters (pad with zeroes) in increments of 01. Any value greater than 2,710 will be considered to be 2,710.

See "Set Length 2" on page 356 for detailed instructions on setting this feature.

Select PDF417 Length 2 Setting

To configure this feature, scan the ENTER/EXIT PROGRAMMING MODE bar code above, then the bar code at left followed by the digits from the Alphanumeric characters in Appendix G, Keypad representing your desired character(s). End by scanning the ENTER/EXIT bar code again.

Make a mistake? Scan the CANCEL bar code to abort and not save the entry string. You can then start again at the beginning.

CANCEL

★Length 2 is 2,710 Characters

MICRO PDF417

Micro PDF417 Enable / Disable

Enables/disables the ability of the reader to decode Micro PDF417 labels.

Micro PDF417 = Disable

★Micro PDF417 = Enable

Micro PDF417 Code 128 GS1-128 Emulation

Specifies which AIM ID to use for Micro PDF labels when doing Code 128 or GS1-128 emulation.

Emulation choices are:

- Micro PDF AIM ID and label type
- Code 128 / EAN128 AIM Id and label type.

★Micro PDF417 Code 128 GS1-128 Emulation = Micro PDF AIM ID and label type

Micro PDF417 Code 128 GS1-128 Emulation = Code 128 / EAN128 AIM ID and label type

Micro PDF417 Length Control

This feature specifies either variable length decoding or fixed length decoding for this symbology.

Variable Length: For variable length decoding, a minimum and maximum length may be set.

Fixed Length: For fixed length decoding, two different lengths may be set.

★Micro PDF417 Length Control = Variable Length

Micro PDF417 Length Control = Fixed Length

Micro PDF417 Set Length 1

Specifies one of the bar code lengths for "Micro PDF417 Length Control" on page 249. Length 1 is the minimum label length if in Variable Length Mode, or the first fixed length if in Fixed Length Mode. Length includes the bar code's data characters only. Characters can be set from 0001 to 0366 characters (pad with zeroes) in increments of 01. Any value greater than 0366 will be considered to be 0366.

See "Set Length 1" on page 355 for detailed instructions on setting this feature.

Select Micro PDF417 Length 1 Setting

To configure this feature, scan the ENTER/EXIT PROGRAMMING MODE bar code above, then the bar code at left followed by the digits from the Alphanumeric characters in Appendix G, Keypad representing your desired character(s). End by scanning the ENTER/EXIT bar code again.

Make a mistake? Scan the CANCEL bar code to abort and not save the entry string. You can then start again at the beginning.

CANCEL

★0001 = Length 1 is 1 Character

Micro PDF417 Set Length 2

This feature specifies one of the bar code lengths for "Micro PDF417 Length Control" on page 249. Length 2 is the maximum label length if in Variable Length Mode, or the second fixed length if in Fixed Length includes the bar code's data characters only. Characters can be set from 0001 to 0366 characters (pad with zeroes) in increments of 01. Any value greater than 0366 will be considered to be 0366.

See "Set Length 2" on page 356 for detailed instructions on setting this feature.

Select Micro PDF417 Length 2 Setting

To configure this feature, scan the ENTER/EXIT PROGRAMMING MODE bar code above, then the bar code at left followed by the digits from the Alphanumeric characters in Appendix G, Keypad representing your desired character(s). End by scanning the ENTER/EXIT bar code again.

Make a mistake? Scan the CANCEL bar code to abort and not save the entry string. You can then start again at the beginning.

CANCEL

★Length 2 i s 0366 Characters

QR CODE

QR Code Enable / Disable

Enables/disables the ability of the reader to decode QR Code labels.

QR Code = Disable

★QR Code = Enable

QR Code Length Control

This feature specifies either variable length decoding or fixed length decoding for this symbology.

Variable Length: For variable length decoding, a minimum and maximum length may be set.

Fixed Length: For fixed length decoding, two different lengths may be set.

★QR Code Length Control = Variable Length

QR Code Length Control = Fixed Length

QR Code Set Length 1

This feature specifies one of the bar code lengths for "QR Code Length Control" on page 251. Length 1 is the minimum label length if in Variable Length Mode, or the first fixed length if in Fixed Length Mode. Characters can be set from 0001 to 7,089 characters in increments of 0001 (pad with zeroes).

See "Set Length 1" on page 355 for detailed instructions on setting this feature.

Select QR Code Length 1 Setting

To configure this feature, scan the ENTER/EXIT PROGRAMMING MODE bar code above, then the bar code at left followed by the digits from the Alphanumeric characters in Appendix G, Keypad representing your desired character(s). End by scanning the ENTER/EXIT bar code again.

Make a mistake? Scan the CANCEL bar code to abort and not save the entry string. You can then start again at the beginning.

CANCEL

★0001 = Length 1 is 1 Character

QR Code Set Length 2

This feature specifies one of the bar code lengths for "QR Code Length Control" on page 251. Length 2 is the maximum label length if in Variable Length Mode, or the second fixed length if in Fixed Length Mode. Characters can be set from 0001 to 7,089 characters in increments of 0001 (pad with zeroes).

See "Set Length 2" on page 356 for detailed instructions on setting this feature.

Select QR Code Length 2 Setting

To configure this feature, scan the ENTER/EXIT PROGRAMMING MODE bar code above, then the bar code at left followed by the digits from the Alphanumeric characters in Appendix G, Keypad representing your desired character(s). End by scanning the ENTER/EXIT bar code again.

Make a mistake? Scan the CANCEL bar code to abort and not save the entry string. You can then start again at the beginning.

CANCEL

★Length 2 i s 7,089 Characters

MICRO QR CODE

Micro QR Code Enable / Disable

Enables/disables the ability of the reader to decode Micro QR Code labels.

★Micro QR Code = Disable

Micro QR Code = Enable

Micro QR Code Length Control

This feature specifies either variable length decoding or fixed length decoding for this symbology.

Variable Length: For variable length decoding, a minimum and maximum length may be set.

Fixed Length: For fixed length decoding, two different lengths may be set.

★Micro QR Code Length Control = Variable Length

Micro QR Code Length Control = Fixed Length

Micro QR Code Set Length 1

This feature specifies one of the bar code lengths for "Micro QR Code Length Control" on page 253. Length 1 is the minimum label length if in Variable Length Mode, or the first fixed length if in Fixed Length Mode. Characters can be set from 0001 to 0035 characters in increments of 0001 (pad with zeroes).

See "Set Length 1" on page 355 for detailed instructions on setting this feature.

Select Micro QR Code Length 1 Setting

To configure this feature, scan the ENTER/EXIT PROGRAMMING MODE bar code above, then the bar code at left followed by the digits from the Alphanumeric characters in Appendix G, Keypad representing your desired character(s). End by scanning the ENTER/EXIT bar code again.

Make a mistake? Scan the CANCEL bar code to abort and not save the entry string. You can then start again at the beginning.

CANCEL

★0001 = Length 1 is 1 Character

Micro QR Code Set Length 2

This feature specifies one of the bar code lengths for "Micro QR Code Length Control" on page 253. Length 2 is the maximum label length if in Variable Length Mode, or the second fixed length if in Fixed Length Mode. Characters can be set from 0001 to 0035 characters in increments of 0001 (pad with zeroes).

See "Set Length 2" on page 356 for detailed instructions on setting this feature.

Select Micro QR Code Length 2 Setting

To configure this feature, scan the ENTER/EXIT PROGRAMMING MODE bar code above, then the bar code at left followed by the digits from the Alphanumeric characters in Appendix G, Keypad representing your desired character(s). End by scanning the ENTER/EXIT bar code again.

Make a mistake? Scan the CANCEL bar code to abort and not save the entry string. You can then start again at the beginning.

CANCEL

★Length 2 i s 0035 Characters

UCC COMPOSITE

UCC Optional Composite Timer

Specifies the amount of time the system will wait for the stacked part of a UCC Composite label before transmitting the linear label without an add-on.

UCC Optional Composite Timer = Timer Disabled

★UCC Optional Composite Timer = 70 msec

UCC Optional Composite Timer = 100 msec

UCC Optional Composite Timer = 200 msec

UCC Optional Composite Timer = 300 msec

Postal Code Selection

Enables/disables the ability of the reader to decode labels of a specific postal symbology.

- Disable All Postal Codes
- Postnet
- Planet
- Royal Mail
- Kix
- Australia Post
- Japan Post
- IMB
- Sweden Post
- Portugal Post

★Postal Code Selection = Disable All Postal Codes

Postal Code Selection = Enable Postnet

Postal Code Selection = Enable Planet

Postal Code Selection = Enable Royal Mail

Postal Code Selection = Enable Kix

Postal Code Selection = Enable Australia Post

Postal Code Selection = Enable Japan Post

Postal Code Selection (continued)

Postal Code Selection = Enable IMB

Postal Code Selection = Enable Sweden Post

Postal Code Selection = Enable Portugal Post

Postnet BB Control

Controls the ability of the reader to decode B and B' fields of Postnet labels.

★Postnet BB Control = Disable

Postnet BB Control = Enable

DIGIMARC

Digimarc

★Digimarc = Disable

Digimarc = Compatible

Digimarc = Enhanced

Digimarc = Native

Set Digimarc Scale Parameter

Set the Digimarc Scale Parameter from 001 to 255.

Set Digimarc Scale Parameter

To configure, scan the ENTER/EXIT PROGRAMMING MODE bar code above, then the bar code at left followed by 3 digits from the Alphanumeric characters in Appendix G, Keypad. End by scanning the ENTER/EXIT bar code.

Make a mistake? Scan the CANCEL bar code to abort and not save the entry string. You can then start again at the beginning.

CANCEL

★003

CONFIGURATION | OCR DECODING

The PowerScan™ PD/PM/PBT9600 family is equipped with an Optical Character Recognition feature.

This section describes how to configure the Datalogic bar code reader to enable OCR decoding.

The PowerScan™ PD/PM/PBT9600 models support the following OCR font types:

- OCR-A
- OCR-B
- MICR E13B.

In most OCR applications a suitable usage of check digits and the addition of constraints on sub-strings types (e.g. digits-only or letter-only) reduces misdecoding probabilities.

The user can choose between a set of predefined templates (already optimized for decoding) and customizable free templates.

For free templates, as OCR decoding is less reliable than traditional barcode decoding, the reader provides tools to minimize misdecoded labels. As a result, particular care shall be dedicated to the setup of free custom templates to reduce incorrect output.

For more information on how to customize the user templates for your needs, please contact Datalogic Technical Support.

Use one of the following labels to enable one of the predefined templates for OCR decoding.

OCR Decoding Predefined Templates

The following selections are exclusive, enabling one template automatically disables the others.

★OCR Predefined Template = Disable OCR Function

OCR Predefined Template = EU Identity Card OCR

OCR Predefined Template = IATA Passport OCR

OCR Predefined Template = Italian Post OCR Payment

OCR Predefined Template = Italian Bank Freccia Bank Payment form

OCR Predefined Template = Swiss Driving License OCR

CONFIGURATION | DISPLAY AND KEYBOARD FEATURES

SECTION CONTENTS

Display and Keyboard Features starting on page 262

- Display Operating Mode
- Display Off Timeout
- Backlight Enable
- Font Size
- Show no printable characters
- Set the Display Append State for Host Message
- Enable/disable buttons
- Arrow Keys Mode (4-key models only)
- Arrow Up String (4-key models only)
- Arrow Down String (4-key models only)
- Legend for Arrow UP (4-key models only)
- Legend for Arrow DOWN (4-key models only)
- Custom String for Display Legend

Configure Actions for Function Keys starting on page 270

- Function Keys Configuration for 16-key Models Only
- Function Keys Configuration for 4-key Models Only
- Define Strings

Additional Features for 16-key Models starting on page 278

- Last Code Shown Timeout
- Display Time Stamping Mode
- Time Stamping Mode can be applied when entering data from either a barcode, from the keyboard, or both.
- Mode Selection
- Quantity Field
- Quantity/Code Send Mode
- Quantity/Code Separator
- Interkey Timeout
- Append Code
- Echo
- Keypress Sound
- Lower Case
-
- Set Function Key Labels

Barcode/Key Different Data Format starting on page 286

- Set Barcode Header
- Set Barcode Terminator
- Set Key Sequence ID
- Set Key Sequence Header
- Set Key Sequence Terminator
- Set String ID
- Set String Header
- Set String Terminator
- Barcode/Key Different Data Format

DISPLAY AND KEYBOARD FEATURES

Two keyboard models are available, the 4-key model and the 16-key model. The following section contains configuration parameters that are common and applicable to both keypad models, unless specifically labeled as “4-key models only” or “16-key models only”.

For more items for the 16-key model, see Additional Features for 16-key Models, starting on page 278.

Display Operating Mode

Select the operating mode of the display. Options are:

- **Normal Mode**: Display not cleared, no echo of the code on Display.
- **Local Echo**: Display cleared after decode, echo of the code on display.
- **Clear display after decode**: Display is cleared after decode, no echo.

Normal Mode = Display not cleared

★Local echo mode

Clear display after decode

Display Off Timeout

Sets the timeout for display, backlight and keyboard.

Set Display Off Timeout

To configure this feature, scan the ENTER/EXIT PROGRAMMING MODE bar code above, then the bar code at left followed by two digits (01-99 sec.) from the Alphanumeric characters in Appendix G, Keypad representing your desired character(s). End by scanning the ENTER/EXIT bar code again.

Make a mistake? Scan the CANCEL bar code to abort and not save the entry string. You can then start again at the beginning.

CANCEL

★08 = 8 second delay

Backlight Enable

Enables/Disables the keyboard backlight.

★Backlight Disabled

Backlight Enabled

Font Size

Select the font size.

★Font Size = Small

Font Size = Medium

Font Size = Large

Show no printable characters

★ASCII under 0x20 are ignored

ASCII under 0x20 are displayed

Set the Display Append State for Host Message

It defines if host message on display has to be appended to the previous or not.

★Disable the Append State

Enable the Append State

Enable/disable buttons

This feature offers the ability to enable or disable the keypad.

It is possible to set values between 0x0000 to 0xFFFF. Each bit corresponds to the enabling (value 1) or disabling (value 0) of a key [the values are a mask associated with each key 1111 1111 1111 1111].

For 4-key models, the valid range for enabling/disabling the keys is from 0x0000 to 0xF000.

The association between the bits and the keys is illustrated in the following table:

BIT	15	14	13	12	11	10	9	8	7	6	5	4	3	2	1	0
16 Keys	**Shift**	**F4**	**4**	**8**	**F1**	**1**	**5**	**9**	**F2**	**2**	**6**	**0**	**F3**	**3**	**7**	**Enter**
4 Keys	**Up**	**F2**	**F1**	**Down**												

Figure 12 - PM9600 4-key and 16-key Models

Key Programming

★All keys enabled

All keys disabled

Enable a combination of keys

To configure this feature, scan the ENTER/EXIT PROGRAMMING MODE bar code above, then the bar code at left followed by 4 digits from the Alphanumeric characters in Appendix G, Keypad.

Make a mistake? Scan the CANCEL bar code to abort and not save the entry string. You can then start again at the beginning.

CANCEL

In the following table an example of key programming:

Enable only "Shift", "1", e **"F1"**:

BIT	15	14	13	12	11	10	9	8	7	6	5	4	3	2	1	0
16 Keys	**Shift**	**F4**	**4**	**8**	**F1**	**1**	**5**	**9**	**F2**	**2**	**6**	**0**	**F3**	**3**	**7**	**Enter**
Binary	1	0	0	0	1	1	0	0	0	0	0	0	0	0	0	0
Hex	8				C				0				0			

The desired characters are: **8 C 0 0**

Arrow Keys Mode (4-key models only)

Configure the Arrow Keys functionality type. Two options are available:

Function Keys Action Select mode: When in this mode, arrow keys are used to select one of the 3 possible actions associated to the Function Keys. To associate actions to the Function keys, see Configure Actions for Function Keys, starting on page 270.

String Association Mode: When in this mode, each one of the arrow keys can be programmed to display and transmit a pre-defined string.

SHIFT Mode

★STRING Mode

Arrow Up String (4-key models only)

Associate a pre-defined string to the Arrow Up key

Set string for Arrow Up Key

To configure this feature, scan the ENTER/EXIT PROGRAMMING MODE bar code above, then the bar code at left. Define the label string by further scanning 32 digits from the Alphanumeric characters in Appendix G, Keypad.

The digits must be the hexadecimal ASCII representation of the desired characters; if less than the expected string of 16 characters are selected, scan the ENTER/EXIT bar code to terminate the string.

End by scanning the ENTER/EXIT bar code again.

Make a mistake? Scan the CANCEL bar code to abort and not save the entry string. You can then start again at the beginning.

CANCEL

★0x3D00000000000000000000000000000000

Arrow Down String (4-key models only)

Associate a pre-defined string to the Arrow Down key

Set string for Arrow Down Key

To configure this feature, scan the ENTER/EXIT PROGRAMMING MODE bar code above, then the bar code at left. Define the label string by further scanning 32 digits from the Alphanumeric characters in Appendix G, Keypad.

The digits must be the hexadecimal ASCII representation of the desired characters; if less than the expected string of 16 characters are selected, scan the ENTER/EXIT bar code to terminate the string.

End by scanning the ENTER/EXIT bar code again.

Make a mistake? Scan the CANCEL bar code to abort and not save the entry string. You can then start again at the beginning.

CANCEL

Legend for Arrow UP (4-key models only)

Set the string to be shown in display legend for arrow up Key

Set legend for Arrow Up Key

To configure this feature, scan the ENTER/EXIT PROGRAMMING MODE bar code above, then the bar code at left followed by 4 couples of digits from the Alphanumeric characters in Appendix G, Keypad. End by scanning the ENTER/EXIT bar code again.

Make a mistake? Scan the CANCEL bar code to abort and not save the entry string. You can then start again at the beginning.

CANCEL

★3D00

Legend for Arrow DOWN (4-key models only)

Set the string to be shown in display legend for arrow down key.

Set Legend for Arrow Down

To configure this feature, scan the ENTER/EXIT PROGRAMMING MODE bar code above, then the bar code at left followed by 4 couples of digits from the Alphanumeric characters in Appendix G, Keypad.

End by scanning the ENTER/EXIT bar code again.

Make a mistake? Scan the CANCEL bar code to abort and not save the entry string. You can then start again at the beginning.

CANCEL

★3D00

Custom String for Display Legend

Define a string of up to 16 characters that will be displayed instead of the menu.

Set a Custom String for Display Legend

To configure this feature, scan the ENTER/EXIT PROGRAMMING MODE bar code above, then the bar code at left. Define the label string by further scanning 16 couples of digits from the Alphanumeric characters in Appendix G, Keypad.

End by scanning the ENTER/EXIT bar code again.

Make a mistake? Scan the CANCEL bar code to abort and not save the entry string. You can then start again at the beginning.

CANCEL

CONFIGURE ACTIONS FOR FUNCTION KEYS

Each of the function keys can be programmed to perform a user-assigned function. This is done by associating a function key with either a predefined command or your own custom string. See the "Define Strings" on page 274 command to define customized strings.

Each function key has an associated label which shows in the display when active. The default labels are shown in the table below. To program the function key labels, see "Set String ID" on page 288

The following table shows the list of predefined commands and available strings.

Table 5 - Keyboard Programming

CMD_ID	NAME	FUNCTION	DEFAULT LABEL	16K	4K
00	Not configured	Not configured action. If a key must be kept enabled but isn't required in normal mode, this function can be selected to keep it ineffective. Whenever an unconfigured function key is pressed, an error message appears on the display and an error beep is emitted.	<None>	✓	✓
01	Enter CMD	Same as ENTER_KEY.		✓	✗
02	String 1	Display and transmit string 1.	T1.	✓	✓
03	String 2	Display and transmit string 2.	T2.	✓	✓
04	String 3	Display and transmit string 3.	T3.	✓	✓
05	String 4	Display and transmit string 4.	T4.	✓	✓
06	String 5	Display and transmit string 5.	T5.	✓	✓
07	Backlight CMD	Toggle backlight on/off.		✓	✓
08	Clear CMD	Clears the screen.		✓	✓
09	Backspace CMD	Same as Backspace key.		✓	✗
0A	Recall	If pressed once, it recalls the last code sent out. If pressed twice, resends the last code.		✓	✓
0B	Show Date/Time	Display the internal date, time.		✓	✓
0C	Scroll Up	Scroll up display content by row.		✓	✓
0D	Scroll Down	Scroll down display content by row.		✓	✓
0E	Dot char	Display dot [.] char.	[.]	✓	✗
0F	Dynamic Quantity	Dynamic Quantity Code function.		✓	✗
10	Shift action	Switch between numeric and alphanumeric mode		✓	✗

ACTION CONFIGURATION FOR FUNCTION KEYS

Configure actions for the function keys.

Table 6 - Default Action Keys

	16K	4K
F1	07 Backlight	02 String 1
F2	0E Dot char	03 String 2
F3	09 Backspace CMD	N.A.
F4	08 Clear	N.A.
Shift	10 Shift	N.A.

To configure the following features, follow the procedure below:

1. Scan the ENTER/EXIT PROGRAMMING MODE bar code above.
2. Scan the bar code for the Function Key you want to program.
3. Determine the CMD_ID number from Table 5 on page 270.
4. Scan the corresponding 2 digits from the Alphanumeric characters in Appendix G, Keypad.
5. End the procedure by scanning the ENTER/EXIT bar code again.

Configures Action for F1

Configures Action for F2

Make a mistake? Scan the CANCEL bar code to abort and not save the entry string. You can then start again at the beginning.

CANCEL

Function Keys Configuration for 16-key Models Only

Function Keys F3 through Shift are available on 16-key models only. For more 16-key programming, see "Additional Features for 16-key Models" on page 278.

Configures Action for F3

Configures Action for F4

Configures Action for Shift

Make a mistake? Scan the CANCEL bar code to abort and not save the entry string. You can then start again at the beginning.

CANCEL

Function Keys Configuration for 4-key Models Only

The following settings are available only for 4-key models when configured in **Function Keys Action Select mode** on page 267.

Configure 2nd Action for F1

Configure 3rd Action for F1

Configure 2nd Action for F2

Configure 3rd Action for F2

Make a mistake? Scan the CANCEL bar code to abort and not save the entry string. You can then start again at the beginning.

CANCEL

DEFINE STRINGS

Configure string 1-5.

To configure this feature, scan the ENTER/EXIT PROGRAMMING MODE bar code at the top of the page, then the bar code for the String you want to set. Define the label string by scanning 32 digits from the Alphanumeric characters in Appendix G, Keypad.

The digits must be the hexadecimal ASCII representation of the desired characters; if less than the expected string of 16 characters are selected, scan the ENTER/EXIT bar code to terminate the string.

End by scanning the ENTER/EXIT bar code again.

Set String 1

Set String 2

Set String 3

Set String 4

Set String 5

Make a mistake? Scan the CANCEL bar code to abort and not save the entry string. You can then start again at the beginning.

CANCEL

FUNCTION KEYS FOR BATCH CONTEXT

The following configuration items allow to change the function keys for the batch context. This is done by associating a function key with a predefined command.

The following table shows the list of available function keys for the batch context.

For the default labels, see Table 8 on page 275:

Table 7 - Function Keys for Batch Context

CMD_ID	NAME
0x00	Not configured
0x01	Move to top element of the queue
0x02	Scroll up
0x03	Scroll down
0x04	Delete the current element
0x05	Erase the entire queue
0x06	Send the entire queue
0x07	Send the entire queue without erasing it
0x08	Shift
0xFF	Default

Table 8 - Default labels

KEY	DEFAULT
F1	01
F2	FF
F3 (Arrow up 4k)	FF
F4 (Arrow down 4k)	FF
Shift (16k)	08

Set Action for F1 in Batch Context

Set Action for F1 in Batch Context

To configure this feature, scan the ENTER/EXIT PROGRAMMING MODE bar code above, then the bar code at left. Choose two digits representing the value in Table 7 on page 275 from the Alphanumeric characters in Appendix G, Keypad.

End by scanning the ENTER/EXIT bar code again.

Make a mistake? Scan the CANCEL bar code to abort and not save the entry string. You can then start again at the beginning.

CANCEL

Set Action for F2 in Batch Context

Set Action for F2 in Batch Context

To configure this feature, scan the ENTER/EXIT PROGRAMMING MODE bar code above, then the bar code at left. Choose two digits representing the value in Table 7 on page 275from the Alphanumeric characters in Appendix G, Keypad.

End by scanning the ENTER/EXIT bar code again.

Make a mistake? Scan the CANCEL bar code to abort and not save the entry string. You can then start again at the beginning.

CANCEL

Set Action for F3 (Arrow up in 4K Model) in Batch context

Set Action for F3(Arrow up in 4K Model) in Batch context

To configure this feature, scan the ENTER/EXIT PROGRAMMING MODE bar code above, then the bar code at left. Choose two digits representing the value in Table 7 on page 275 from the Alphanumeric characters in Appendix G, Keypad.

End by scanning the ENTER/EXIT bar code again.

Make a mistake? Scan the CANCEL bar code to abort and not save the entry string. You can then start again at the beginning.

CANCEL

Set Action for F4 (Arrow Down in 4K Model) in Batch context

Set Action for F4 (Arrow Down in 4K Model) in Batch context

To configure this feature, scan the ENTER/EXIT PROGRAMMING MODE bar code above, then the bar code at left. Choose two digits representing the value in Table 7 on page 275 from the Alphanumeric characters in Appendix G, Keypad.

End by scanning the ENTER/EXIT bar code again.

Make a mistake? Scan the CANCEL bar code to abort and not save the entry string. You can then start again at the beginning.

CANCEL

Set Action for Shift (16K Model) in Batch context

Set Action for Shift (16K Model) in Batch context

$CKFB5

To configure this feature, scan the ENTER/EXIT PROGRAMMING MODE bar code above, then the bar code at left. Choose two figures representing the value in Table 7 on page 275 from the Alphanumeric characters in Appendix G, Keypad.

End by scanning the ENTER/EXIT bar code again.

Make a mistake? Scan the CANCEL bar code to abort and not save the entry string. You can then start again at the beginning.

CANCEL

ADDITIONAL FEATURES FOR 16-KEY MODELS

See also "Function Keys Configuration for 16-key Models Only" on page 272.

Last Code Shown Timeout

After the code transmission, the last code read will be shown on the display for a configurable timeout. If it is set to 00 it means that the code is not deleted from the display even at the Display Off Timeout.

NOTE: The standard DISPLAY OFF TIMEOUT (see page 262) has a higher priority than the LAST CODE SHOWN TIMEOUT, so the two parameters should be combined to get the desired result.

Last Code Shown Timeout

To configure this feature, scan the ENTER/EXIT PROGRAMMING MODE bar code above, then the bar code at left followed by 2 digits (00-99 sec. by 01) from the Alphanumeric characters in Appendix G, Keypad.

End by scanning the ENTER/EXIT bar code again.

Make a mistake? Scan the CANCEL bar code to abort and not save the entry string. You can then start again at the beginning.

CANCEL

★ 2 seconds

Display Time Stamping Mode

Time Stamping Mode can be applied when entering data from either a barcode, from the keyboard, or both.

★Applied to both

Applied only to barcode data

Applied only to keyboard data

Mode Selection

This feature allows the PowerScan 16K model to operate in one of two basic operative modes:

- Normal Mode — data entered, either on the keypad or read via barcode, is transmitted to the host once the enter key is pressed, following the configured formatting.
- Quantity/Code Mode — Can be further configured. See the next sections for Qty/Code operations.

★Set Normal Mode

Set Qty Code Mode

Quantity Field

This feature defines the behavior of the scanner if no data is entered in the QTY field so that it is left empty. Options are:

- code is transmitted with default QTY ('1')
- code is transmitted alone (without any quantity information)
- code is discarded and an error beep is generated

★Transmit code with default qty ('1')

Transmit Code only

Discard Code

Quantity/Code Send Mode

This feature defines the rules that will be used to send a QTY/CODE pair:

0. Code is transmitted with QTY field (and its predefined format) preceding CODE field (and its predefined format)
1. Code is transmitted with CODE field (and its predefined format) preceding QTY field (and its predefined format)
2. Code in CODE field is sent out for the number of times defined in the QTY field

★Qty precedes Code

Code precedes Qty

Code transmitted Qty times

Quantity/Code Separator

This feature allows the insertion of a separator between Qty/Code pairs.

★No separator

Set Qty/Code string separator

To configure this feature, scan the ENTER/EXIT PROGRAMMING MODE bar code above, then the barcode at left. Next scan 1 digit from Appendix G, Keypad (in the range 1-8) representing the number of characters to be used as separator.

Finally, define the separator string by reading the desired characters from the ASCII table at the back of this manual, expressed in hexadecimal form. End by scanning the ENTER/EXIT bar code again.

Interkey Timeout

The 16-key keypad has a multi-tap access to alpha characters on numeric keys. In alphabetic mode (entered by toggling the SHIFT key), the keys must be pressed once, twice, or more to obtain the desired letter.

This command allows you to specify the time which occurs between a key press, and the confirmation of the letter by the scanner (when in alpha mode). The timeout can be configured in increments of 0.5 second.

0.5 seconds

★1.0 seconds

1.5 seconds

2.0 seconds

Append Code

This function defines how a scanned barcode interacts with a pre-edited CODE field, or with a string entered by a preprogrammed FUNC KEY.

Options are:

0. Barcode data overwrites what is written in the CODE field by keyboard and the code is transmitted;
1. Barcode data is appended to any text in the CODE field and the code is transmitted;
2. Barcode data is appended to any text in the CODE field but the code IS NOT transmitted. Data is transmitted when the enter key is pressed.
3. Barcode data is appended to any text in the CODE field and the code is transmitted if Function Key's string has CR.

★Overwrite always

Append and transmit

Append and don't transmit

Append and transmit if Function Key's string has CR

Echo

This function enables/disables the keypad echo. It works only when the scanner is in simple data input mode (no QTY/CODE).

★Full Keypad echo

No echo on function key

No echo on any key

Keypress Sound

Enables/disables the KEY press sound ('click').

★Disable

Enable

Lower Case

This function enables/disables the capability to use the SHIFT key to switch to Lower Case (alphanumeric) mode. When enabled, the indication in the upper right corner of display is ‘ab’.

★Disable Lower Case

Enable Lower Case

Enable Legend

.

Hide display legend row

★Show display legend row

Set Function Key Labels

This item allows the user to change the default mnemonic label associated to each individual function key. This is done by programming a short acronym 4-character string to be shown in the bottom of the display. The purpose of the label is to serve as an indication of the programmed function of the Function Key below it.

For 16-Key models and all function keys, only characters from 1 to 4 are considered.

For 4-Key models, characters from 5 to 8 and from 9 to 12 are used for “Set F1 label” and “Set F2 label” only if the scanner has been configured with "Function Keys Action Select mode:" on page 267. Characters from 5 to 8 are used to set the string that will be displayed in the legend for 2nd Action for F1 and 2nd Action for F2. Characters from 9 to 12 are used to set the 3rd Action string for F1 and the 3rd Action string for F2.

For all the parameters below, read the command followed by up to 24 digits representing 12 ASCII characters from Appendix G, Keypad.

When these parameters are set to default the device displays an icon as shown in Table 5 on page 270.

Set F1 label

★0x000000000000000000000000

Set F2 label

★0x000000000000000000000000

Set F3 label

★0x000000000000000000000000

Set F4 label

★0x000000000000000000000000

BARCODE/KEY DIFFERENT DATA FORMAT

If this parameter is enabled, barcode and keyboard entered data can be formatted separately. More specifically: if this parameter is disabled, barcode and keyboard data will share the same Header and Terminator defined using “Set Barcode Header” and “Set Barcode Terminator” below. If this parameter is enabled, keyboard entered data are treated differently, as their format must be programmed through the parameters Set String Header, Set String Terminator, Set Key Sequence Header and Set Key Sequence Terminator.

★Disable

Enable

Set Barcode Header

Sets the header for barcode and keyboard composed strings.

Set barcode header

To configure this feature, scan the ENTER/EXIT PROGRAMMING MODE bar code above, then the bar code at left followed by 32 digits from the Alphanumeric characters in Appendix G, Keypad. The digits must be the hexadecimal ASCII representation of the desired characters.

If less than the expected string of 16 characters are selected, scan the ENTER/EXIT bar code to terminate the string. If the first 2 digits are 0, the feature is disabled. End by scanning the ENTER/EXIT bar code again.

Set Barcode Terminator

Sets the terminator for barcode and keyboard composed strings.

Set barcode terminator

To configure this feature, scan the ENTER/EXIT PROGRAMMING MODE bar code above, then the bar code at left followed by 32 digits from the Alphanumeric characters in Appendix G, Keypad. The digits must be the hexadecimal ASCII representation of the desired characters.

If less than the expected string of 16 characters are selected, scan the ENTER/EXIT bar code to terminate the string. If the first 2 digits are 0, the feature is disabled. End by scanning the ENTER/EXIT bar code again.

Set Key Sequence ID

Sets the identifier for keyboard composed strings.

Set keys sequence ID

To configure this feature, scan the ENTER/EXIT PROGRAMMING MODE bar code above, then the bar code at left followed by 6 digits from Appendix G, Keypad.

The ID characters must be represented by their hexadecimal ASCII code; if the first 2 digits are 0, this feature is disabled. End by scanning the ENTER/EXIT bar code again.

Set Key Sequence Header

Sets the header for keyboard composed strings.

Set key sequence header

To configure this feature, scan the ENTER/EXIT PROGRAMMING MODE bar code above, then the bar code at left followed by 32 digits from the Alphanumeric characters in Appendix G, Keypad. The digits must be the hexadecimal ASCII representation of the desired characters.

If less than the expected string of 16 characters are selected, scan the ENTER/EXIT bar code to terminate the string.

If the first 2 digits are 0, the feature is disabled. End by scanning the ENTER/EXIT bar code again.

Set Key Sequence Terminator

Sets the terminator for keyboard composed strings.

Set key sequence terminator

To configure this feature, scan the ENTER/EXIT PROGRAMMING MODE bar code above, then the bar code at left followed by 32 digits from the Alphanumeric characters in Appendix G, Keypad. The digits must be the hexadecimal ASCII representation of the desired characters.

If less than the expected string of 16 characters are selected, scan the ENTER/EXIT bar code to terminate the string.

If the first 2 digits are 0, the feature is disabled. End by scanning the ENTER/EXIT bar code again.

Set String ID

Sets the identifier of the predefined strings.

Set String ID

To configure this feature, scan the ENTER/EXIT PROGRAMMING MODE bar code above, then scan the bar code at left and then read 6 digits representing 3 ASCII characters from the Appendix G, Keypad.

Make a mistake? Scan the CANCEL bar code to abort and not save the entry string. You can then start again at the beginning.

CANCEL

★0x000000000000000000000000000000000

Set String Header

Sets the header of the predefined strings.

Set String Header

To configure this feature, scan the ENTER/EXIT PROGRAMMING MODE bar code above, then the bar code at left, and then read 32 digits representing 16 ASCII characters in Appendix G, Keypad.

The digits must be the hexadecimal ASCII representation of the desired characters. If less than the expected string of 16 characters are selected, scan the ENTER/EXIT bar code to terminate the string.

If the first 2 digits are 0, the feature is disabled. End by scanning the ENTER/EXIT bar code again.

Make a mistake? Scan the CANCEL bar code to abort and not save the entry string. You can then start again at the beginning.

CANCEL

★0x000000000000000000000000000000000

Set String Terminator

Sets the terminator of the predefined strings.

Set String Terminator

To configure this feature, scan the ENTER/EXIT PROGRAMMING MODE bar code above, then the bar code at left, and then read 32 digits representing 16 ASCII characters in Appendix G, Keypad.

The digits must be the hexadecimal ASCII representation of the desired characters. If less than the expected string of 16 characters are selected, scan the ENTER/EXIT bar code to terminate the string.

If the first 2 digits are 0, the feature is disabled. End by scanning the ENTER/EXIT bar code again.

Make a mistake? Scan the CANCEL bar code to abort and not save the entry string. You can then start again at the beginning.

CANCEL

★0x00000000000000000000000000000000

CONFIGURATION | POWER MANAGEMENT

SECTION CONTENTS

POWER SAVE starting on page 291

- Powerdown Timeout

BATTERY PROFILES starting on page 292

- Battery Profiles
- Battery Information

These parameters refer to Mobile units only (PM/PBT9600 models).

POWER SAVE

Powerdown Timeout

The Powerdown Timeout feature sets the time for automatically switching the unit off when the imager has been idle.

Powerdown Timeout = Disable

Powerdown Timeout = 10 minutes

Powerdown Timeout = 20 minutes

★Powerdown Timeout = 30 minutes

Powerdown Timeout = 60 minutes (1 hour)

Powerdown Timeout = 120 minutes (2 hours)

BATTERY PROFILES

Battery Profiles

PowerScan PM/PBT9600 provides the user the ability to select different usage profiles to better configure the reader with respect to specific needs. By default, the Maximum Performance profile is selected and provides high snappiness and max reading capability. The user can then decide to exploit specific features when others are considered less important, for instance: fast battery recharge instead of battery health, maximum reading performance instead of battery autonomy, etc.

The following Battery Profiles are described with associated benefits and limitations:

★Battery Profile = Maximum Performance

Battery Profile = Maximum Battery Health

Battery Profile = Maximum Autonomy

Battery Profile = Fast Charge

Maximum Performance (default)

- Reader autonomy for heavy workload
- Motionix™ enabled
- Max radio communication performances

Maximum Battery Health

- Battery capacity is preserved
- Reduced max charging current
- Reduced battery capacity by ~20%
- Increased recharge time: +20% on average (it depends on the specific reader configuration)

Maximum Autonomy

- Max reader autonomy
- Motionix™ disabled
- Vibro motor disabled
- Reduced Radio Star™ responsiveness[a]

Fast Charge

- Reduced recharge time
- Motionix™ disabled
- Vibro motor disabled

a. Host commands from cradle, asynchronous data from cradle, paging button will not be received; out-of-range signaling will not work, configuration exchange will not be executed automatically (only after trigger pressure).
Host download of the hand-held not placed on the base will not work.

Battery Information

By using Datalogic Aladdin utility, additional battery data can be retrieved, i.e.:

- HH Serial Number
- Charge %
- Health %
- Full Charge Capacity
- Designed Capacity
- Nominal Capacity
- Remaining Capacity
- Discharging Counter
- Charging Status
- Battery Voltage
- Battery Current
- Manufacturer Date
- Battery Serial Number
- Battery Model Number

If more than one reader is connected to a base station, battery data will be retrieved for each reader.

CONFIGURATION | WIRELESS FEATURES

SECTION CONTENTS

WIRELESS BEEPER FEATURES starting on page 296

- Good Transmission Beep
- Beep Frequency
- Beep Duration
- Beep Volume
- Disconnect Beep
- Docking (Connecting) Beep
- Leash Alarm
- Base Button Enable
- Battery level indication with Double TAP

CONFIGURATION UPDATES starting on page 302

- Automatic Configuration Update
- Copy Configuration to Reader
- Copy Configuration to Base Station

BATCH FEATURES starting on page 303

- Batch Mode
- Send Batch
- Erase Batch Memory
- Send but do not Erase Batch Memory
- RF Batch Mode Transmit Delay

DIRECT RADIO AUTOLINK starting on page 305

- Direct Radio Autolink

RF ADDRESS STAMPING starting on page 306

- Source Radio Address Transmission
- Source Radio Address Delimiter Character
- Extended Statistics
- Hand Held Statistic Frequency

REAL TIME CLOCK (RTC) CONFIGURATION starting on page 308

- Time Tx Format
- Date Transmission Format
- Date-Time Separator
- Date-Time Transmission Order

BLUETOOTH-ONLY FEATURES starting on page 311

- Bluetooth Security Level
- Bluetooth Radio Output Power
- Wi-Fi Channels Exclusion
- Bluetooth Discoverable Mode Timeout
- Bluetooth Friendly Name

BLUETOOTH HID FEATURES starting on page 320

- Bluetooth HID Alt Mode

FEATURES FOR STAR MODELS ONLY starting on page 321

- STAR Radio Protocol Timeout
- STAR Radio Transmit Mode
- 4 Digit Address Stamping
- Assign Unique Address to the Gun
- 4 Digit Cradle Address Stamping
- Cradle Address Stamping
- Cradle Address Delimiter
- STAR System Speed
- STAR Frequency Agility

WIRELESS BEEPER FEATURES

Several options are available to configure beeper behavior for RF operation.

Good Transmission Beep

Enables/disables the Good Transmission Beep indication. When enabled, a beep occurs when a Label is correctly transmitted to the base.

Good Transmission Beep = Disable

★Good Transmission Beep = Enable

Beep Frequency

Adjusts radio-specific beep indications to sound at a low, medium or high frequency, selectable from the list below (controls the beeper's pitch/tone).

Beep Frequency = Low

Beep Frequency = Medium

★Beep Frequency = High

Beep Duration

This feature controls the duration of radio-specific beep indications.

Beep Duration = 60 msec

★Beep Duration = 80 msec

Beep Duration = 100 msec

Beep Duration = 120 msec

Beep Duration = 140 msec

Beep Duration = 160 msec

Beep Duration = 180 msec

Beep Duration = 200 msec

Beep Volume

Selects the beeper volume (loudness) of radio-specific beep indications. There are three selectable volume levels.

Beep Volume = Low

Beep Volume = Medium

★Beep Volume = High

Disconnect Beep

Enables/disables the beep indication that a handheld has become disconnected from a Base Station.

Disconnect Beep = Disable

★Disconnect Beep = Enable

Docking (Connecting) Beep

Enables/disables a beep indication when the handheld is placed in the Base Station.

Docking Beep = Disable

★Docking Beep = Enable

Leash Alarm

This setting specifies the number of seconds to sound the Leash Mode beeps (three per second) when the handheld goes out of range. This is especially useful in instances where the reader might inadvertently have been placed in a bag or cart.

For this mode to be effective, the reader must be linked to the Base Station. If the reader is asleep or disconnected from the Base Station, there is no way for it to know where it is relative to the Base Station because communication is not active between the devices.

★Leash Alarm = Disable

Leash Alarm = 1 Second

Leash Alarm = 2 Seconds

Leash Alarm = 3 Seconds

Leash Alarm (continued)

Leash Alarm = 4 Seconds

Leash Alarm = 5 Seconds

Leash Alarm = 10 Seconds

Leash Alarm = 25 Seconds

Leash Alarm = 30 Seconds

Base Button Enable

Enables/disables the base button.

Base button = Disable

★Base Button = Enable

Battery level indication with Double TAP

If enabled, when you double tap the scanner, the battery level status is shown for a few seconds via the LED on the back.

Battery level status:

- Green: >50%
- Yellow: between 50% and 2%
- Red: <2%

Battery level indication with double tap = Disable

★Battery level indication with double tap = Enable

CONFIGURATION UPDATES

Automatic Configuration Update

When this feature is enabled, a reader and its linked Base Station can automatically ensure they stay in sync with regard to application hardware and/or configuration. See page 353 for more information on this feature.

Automatic Configuration Update = Disable

★Automatic Configuration Update = Enable

Copy Configuration to Reader

Scan the following label to copy the current Base Station configuration to the reader. Use this method when the Auto Configuration Update feature is disabled and you want a one-time configuration update to be performed on the reader.

NOTE: Do not scan an ENTER/EXIT PROGRAMMING MODE label in conjunction with this bar code.

Copy Configuration to Reader

Copy Configuration to Base Station

Scan the following label to copy the current reader configuration to the Base Station. Use this method when the Auto Configuration Update feature is disabled and you want a one-time configuration update to be performed on the Base Station.

NOTE: Do not scan an ENTER/EXIT PROGRAMMING MODE label in conjunction with this bar code.

Copy Configuration to Base Station

BATCH FEATURES

Batch Mode

This option specifies whether to store labels in the handheld while disconnected from the base. Options are as follows:

- Disabled — The handheld will not store/batch labels.
- Automatic — The handheld will store labels to RAM when the handheld goes out of range and is disconnected from the remote device.
- Manual — The handheld will always store labels to Flash memory. The user must manually send the stored labels to the remote device using a special “batch send” label. When the handheld is powered off, the labels read in batch mode will remain stored. Data retention is not guaranteed when the handheld is powered off by removing the battery.

★Batch Mode = Disable

Batch Mode = Automatic

Batch Mode = Manual

Send Batch

When the reader is configured in Manual Batch Mode, use the following bar code to initiate sending of labels stored in batch memory.

NOTE: Do not scan an ENTER/EXIT PROGRAMMING MODE label in conjunction with this bar code.

Send Batch

Erase Batch Memory

When the reader is configured in Manual Batch Mode, use the following bar code to erase any labels stored in batch memory.

NOTE: Do not scan an ENTER/EXIT PROGRAMMING MODE label in conjunction with this bar code.

Erase Batch Memory

Send but do not Erase Batch Memory

When the reader is configured in Manual Batch Mode, use the following bar code to send any labels stored in batch memory.

NOTE: Do not scan an ENTER/EXIT PROGRAMMING MODE label in conjunction with this bar code.

Send Batch Memory

RF Batch Mode Transmit Delay

Specifies the delay in 10 msec increments between transmitting labels stored in batch memory.

★RF Batch Mode Transmit Delay = No Delay

RF Batch Mode Transmit Delay = 50 msec

RF Batch Mode Transmit Delay =100 msec

RF Batch Mode Transmit Delay (continued)

RF Batch Mode Transmit Delay = 0.5 seconds

RF Batch Mode Transmit Delay = 1 second

RF Batch Mode Transmit Delay = 2.5 seconds

DIRECT RADIO AUTOLINK

Direct Radio Autolink

This feature enables/disables the ability to link a wireless handheld to a base station without scanning the Unlink label first.

★Direct Radio Link = Unlink Label Required

Direct Radio Link = Automatic Unlinking

RF ADDRESS STAMPING

These features allow configuration of source radio data inclusion.

Source Radio Address Transmission

Enables/disables the ability of source radio address information to be transmitted to the host and, if so, at what position with respect to the label data. See page 353 in "References" for detailed information and examples for setting this feature.

NOTE: When included as a prefix, the source-radio ID is displayed after all label formatting has been applied. The 6 byte hex address is sent as 12 ASCII characters, i.e., an address of 00 06 66 00 1A ED will be sent as (shown in hex): 30 30 30 36 36 36 30 30 31 41 45 44

★Source Radio Address Transmission = Do Not Include

Source Radio Address Transmission = Prefix

Source Radio Address Delimiter Character

This option specifies the delimiter character to be placed between the label data and radio address when address stamping is enabled.

NOTE: This feature only applies if "Source Radio Address Transmission" on page 306 **is enabled.**

Set Source Radio Address Delimiter Character

To configure this feature, scan the ENTER/EXIT PROGRAMMING MODE bar code above, then the bar code at left followed by the digits from the Alphanumeric characters in Appendix G, Keypad representing your desired character(s). End by scanning the ENTER/EXIT bar code again.

Make a mistake? Scan the CANCEL bar code to abort and not save the entry string. You can then start again at the beginning.

CANCEL

★Delimiter Character = 00 (no delimiter character)

Extended Statistics

When enabled, statistics information related to each handheld is appended to base i, h, s host commands.

Extended statistics = Disable

★Extended statistics = Enable

Hand Held Statistic Frequency

Define how often the handheld sends its statistics to the base.

Hand Held Statistic Frequency = Never

★Hand Held Statistic Frequency = Every minute

Hand Held Statistic Frequency = Every 3 minutes

Hand Held Statistic Frequency = Every 10 minutes

REAL TIME CLOCK (RTC) CONFIGURATION

Time Tx Format

Sets the format of the time.

★hh:mm:ss (ISO 8601)

hhmmss (No ISO)

Date Transmission Format

Sets the format of the date to be transmitted in attachment to the label

★yyyy-mm-dd (ISO 8601)

yyyymmdd

mmddyyyy

ddmmyyyy

Date-Time Separator

Sets the character used to separate Date and Time from the next field in message.

★Disable Date-Time Separator

Set Character Separator =

To configure this feature, scan the ENTER/EXIT PROGRAMMING MODE bar code above, then the bar code at left followed by 2 digits from the Alphanumeric characters in Appendix G, Keypad representing your desired character(s). End by scanning the ENTER/EXIT bar code again.

Make a mistake? Scan the CANCEL bar code to abort and not save the entry string. You can then start again at the beginning.

CANCEL

Date-Time Transmission Order

Allows the selection of the order of date and time transmission.

★Disabled

ISO 8601: Date'T'Timer

DateTime

TimeDate

Date

Time

BLUETOOTH-ONLY FEATURES

The features in this section are valid only for the PowerScan Bluetooth models.

NOTE: Changing the configuration parameters described in this section may cause a temporary loss of the Bluetooth connection between the Reader and the remote device.

Bluetooth Security Level

NOTE: This parameter applies when pairing the Reader with a third party Bluetooth device. It has no effect when linking the Reader to a Base station.

Set this parameter according to the security requirements of the application scenario when the reader will be employed.

- Select **Level 1 - lowest** when the main application requirement is to avoid any user interaction (e.g. Passkey or PIN entry) during the pairing process. When using this setting, the resulting Bluetooth connection will be encrypted but not authenticated.
- Select **Level 2** when encryption is required, authentication is not required, and minimal user interaction is desired. In this case the Host may ask the user to enter a 6-digit Bluetooth Passkey during the pairing process.
- Select **Level 3 - highest** when a secure connection to the Host is desired, with both encryption and authentication. In this case the Host will ask the user to enter a 6-digit Bluetooth Passkey or a Bluetooth PIN during the pairing process.

If the Host prompts the user to enter a Bluetooth Passkey or PIN code during the pairing process, please refer to "Bluetooth Passkey or Pin Code Entry Request" on page 17 to perform this task.

NOTE: When device authentication takes place during the pairing process, by means of the passkey or PIN entry, the resulting Bluetooth link is protected from Man-In-The-Middle (MITM) malicious attacks.

NOTE: The actual behaviors of the Reader and of the Host system during the pairing process depend on the security settings of both devices involved, and on the input and output means available on each device to interface with the user.

This means that:

- **the user may be required to enter a BT Passkey during the pairing process even if the reader's BT Security Level is set to "Encryption required, authentication not required". This depends on the configuration of the Host system.**
- **when the reader's BT Security Level is set to "Encryption and authentication required", it may not be possible to connect to a Host system if the latter cannot support the Passkey Entry authentication procedure. In this case, try to set the reader's BT Security Level to "Encryption required, authentication not required" to establish the connection.**

NOTE: Changing the BT Security Level setting will unlink the Reader from the remote device.

★BT Security Level = Level 1 - lowest

BT Security Level = Level 2

BT Security Level = Level 3 - highest

Bluetooth Radio Output Power

Set this parameter according to the desired radio range of the Reader:

- Class 1: max 100 meters
- Class 2: max 20 meters
- Class 3: max 5 meters

Reducing the maximum radio range can help extend the battery life of the Reader. It can also reduce the interferences caused to nearby wireless devices that operate in the same 2.4 GHz frequency band.

★Bluetooth Output Power = Class 1 (highest)

Bluetooth Output Power = Class 2

Bluetooth Output Power = Class 3 (lowest)

Wi-Fi Channels Exclusion

In case the Reader operates in the same environment as 2.4 GHz Wi-Fi equipment, set this parameter to configure the strategy that the Reader should employ to minimize the interferences between Bluetooth and Wi-Fi wireless technologies.

- If the specific 802.11 standard or the frequency channels used by the Wi-Fi equipment are unknown, select Automatic to let the Reader use the Adaptive Frequency Hopping (AFH) feature of Bluetooth technology. With this setting, the Reader and the remote Bluetooth device may automatically detect the frequency channels affected by a significant level of interference, and avoid using these channels during Bluetooth data exchange.
- If the specific 802.11 standard and the frequency channels used by the Wi-Fi equipment are known, select the corresponding combination from the list of programming labels below or use the Datalogic Aladdin tool. With this setting, the Reader and the remote Bluetooth device avoid using the Bluetooth frequency channels that overlap with the already occupied Wi-Fi channels.

For example, if the co-located 2.4 GHz Wi-Fi equipment operates according to the 802.11g standard on channels n. 6 and n. 11, read the **802.11b/g ch.6 and 11** programming label.

NOTE: The programming labels in the list below cover the most popular combinations of 802.11 standards and 2.4 GHz Wi-Fi channels. If the configuration command corresponding to your specific scenario is not listed, please contact Datalogic Technical Support for further configuration options.

★WiFi Ch. Exclusion = Automatic

WiFi Ch. Exclusion = 802.11b_g ch.1

WiFi Ch. Exclusion = 802.11b_g ch.2

WiFi Ch. Exclusion = 802.11b_g ch.3

Wi-Fi Channels Exclusion (continued)

WiFi Ch. Exclusion = 802.11b_g ch.4

WiFi Ch. Exclusion = 802.11b_g ch.5

WiFi Ch. Exclusion = 802.11b_g ch.6

WiFi Ch. Exclusion = 802.11b_g ch.7

WiFi Ch. Exclusion = 802.11b_g ch.8

WiFi Ch. Exclusion = 802.11b_g ch.9

WiFi Ch. Exclusion = 802.11b_g ch.10

WiFi Ch. Exclusion = 802.11b_g ch.11

Wi-Fi Channels Exclusion (continued)

WiFi Ch. Exclusion = 802.11b_g ch.12

WiFi Ch. Exclusion = 802.11b_g ch.13

WiFi Ch. Exclusion = 802.11b_g ch.14

WiFi Ch. Exclusion = 802.11b_g ch.1 and 6

WiFi Ch. Exclusion = 802.11b_g ch.1 and 11

WiFi Ch. Exclusion = 802.11b_g ch.6 and 11

WiFi Ch. Exclusion = 802.11b_g ch.1 and 6 and 11

WiFi Ch. Exclusion = 802.11b_g ch.2 and 7

Wi-Fi Channels Exclusion (continued)

WiFi Ch. Exclusion = 802.11b_g ch.2 and 12

WiFi Ch. Exclusion = 802.11b_g ch.7 and 12

WiFi Ch. Exclusion = 802.11b_g ch.2 and 7 and 12

WiFi Ch. Exclusion = 802.11b_g ch.3 and 8

WiFi Ch. Exclusion = 802.11b_g ch.3 and 13

WiFi Ch. Exclusion = 802.11b_g ch.8 and 13

WiFi Ch. Exclusion = 802.11b_g ch.3 and 8 and 13

WiFi Ch. Exclusion = 802.11b_g ch.4 and 9

Wi-Fi Channels Exclusion (continued)

WiFi Ch. Exclusion = 802.11b_g ch.4 and 14

WiFi Ch. Exclusion = 802.11b_g ch.9 and 14

WiFi Ch. Exclusion = 802.11b_g ch.4 and 9 and 14

WiFi Ch. Exclusion = 802.11b_g ch.5 and 10

WiFi Ch. Exclusion = 802.11n ch.3

WiFi Ch. Exclusion = 802.11n ch.11

Bluetooth Discoverable Mode Timeout

It defines how long the scanner is discoverable after reading the "Link HID" or "Link SPP" label.

Discoverable Mode Timeout = 1 minute

Discoverable Mode Timeout = 2 minutes

★Discoverable Mode Timeout = 3 minutes

Discoverable Mode Timeout = 4 minutes

Discoverable Mode Timeout = 5 minutes

Bluetooth Friendly Name

You can set a meaningful name for PBT9600 that will appear in the application during device discovery.

To set a new Bluetooth Friendly Name, scan the barcode below and follow the instructions.

Set Bluetooth Friendly Name

To configure this feature, scan the ENTER/EXIT PROGRAMMING MODE bar code above, then the bar code at left followed by a maximum 64 digits from the Alphanumeric characters in Appendix G, Keypad. The digits must be the hexadecimal ASCII representation of the desired characters. If less than the expected string of 32 characters are selected, scan the ENTER/EXIT bar code to terminate the string.

Make a mistake? Scan the CANCEL bar code to abort and not save the entry string. You can then start again at the beginning.

CANCEL

★POWERSCAN PBT9600 [SERIAL_NUMBER_SCANNER]

BLUETOOTH HID FEATURES

Before connecting the Reader to a Bluetooth HID host device, the keyboard emulation used for label transmission can be configured using the parameters described in this section, plus the following parameters:

- "Setting Country Mode" on page 63
- "Encoding Type" on page 77
- "ALT Output Type" on page 84
- "Keyboard Numeric Keypad" on page 85
- "Keyboard Send Control Characters" on page 85

Bluetooth HID Alt Mode

Enable/Disable the ability to correctly transmit a label to the host regardless of the Bluetooth HID Country Mode selected, when Bluetooth HID Profile is configured.

Read the configuration command label below for the HID Alt Mode feature.

★HID Alt Mode = OFF

HID Alt Mode = ON

FEATURES FOR STAR MODELS ONLY

The features in this section are valid only for the PowerScan PM9600 Star model:

- "STAR Radio Protocol Timeout" on page 321
- "STAR Radio Transmit Mode" on page 321

STAR Radio Protocol Timeout

This parameter sets the valid wait time before transmission between the handheld reader and Base Station is considered failed.

When setting this parameter, take into consideration the radio traffic (number of readers in the same area). The selectable range for this feature is from 02 to 25 seconds. See page 354 in “References” for detailed information and examples for setting this feature.

Set Radio Protocol Timeout

To configure this feature, scan the ENTER/EXIT PROGRAMMING MODE bar code above, then the bar code at left followed by the digits from the Alphanumeric characters in Appendix G, Keypad representing your desired character(s). End by scanning the ENTER/EXIT bar code again.

Make a mistake? Scan the CANCEL bar code to abort and not save the entry string. You can then start again at the beginning.

CANCEL

★Radio Protocol Timeout = 02 (2 seconds)

STAR Radio Transmit Mode

Specifies the transmission protocol for Star communications.

Options are:

- ACK from base station to reader — signals a good transmission as soon as the Base Station receives a label
- ACK when sent to host — reader signals a good transmission as soon as the Base Station has sent the label to the host
- ACK from host — reader signals a good transmission as soon as the Base Station has sent the label to the host and host has replied with an acknowledge message.

★STAR Radio Transmit Mode = ACK from Base Station

STAR Radio Transmit Mode = ACK When Sent to Host

STAR Radio Transmit Mode = ACK from Host

NOTE: ACK from host works only for RS-232 or USB-COM interfaces with ACK/NACK disabled. If ACK from host is configured with any other interface conditions, it works like ACK when sent to host.

See "Message Formatting" on page 357 **for details.**

NOTE: The Base Station can receive a host message only if Host Commands Obey/Ignore (page 46) **is set to Ignore.**

4 Digit Address Stamping

When address stamping is enabled, by default the device uses a 12 hex digit address.

es: 0000002139AE<Message>

With the following setting It is possible to reduce the address size at 4 digit in order to be compatible with host working with this format. The address is not build in into the scanner but must be configured manually by label programming during the installation. It is responsibility of the installer to avoid duplicated address working with the same base.

- This feature affects only the message format between Cradle and Host. Doesn't impact the Radio protocol or procedure to link base and gun.
- In case "Ack from host is configured, the return message must have the same 4 digit address as a prefix.
- This feature is not recommended for new installation.

Enable Address Stamping and eventually address delimiter (See “Source Radio Address Transmission” on page 306.)

★4 Digit Address Stamping = Disable

4 Digit Address Stamping = Enable

Assign Unique Address to the Gun

Assign unique address to the gun as a character string in the range 0000 to 1999.

Assign Unique Address

To configure this feature, scan the ENTER/EXIT PROGRAMMING MODE bar code above, then the bar code at left followed by 4 couples of digits (in hex) from the Alphanumeric characters in Appendix G, Keypad representing your desired character(s). End by scanning the ENTER/EXIT bar code again.

Make a mistake? Scan the CANCEL bar code to abort and not save the entry string. You can then start again at the beginning.

CANCEL

Example: 1234 = 31323334

4 Digit Cradle Address Stamping

Set a unique address to the base via service. Configure it with Aladdin or with a terminal using this command:

$S,CRF4Cxxxxxxxx,Ar[CR]

where xx are 4 couples of digits (in hex) representing the cradle address.

Example: 1234 = $S,CRF4C31323334.Ar[CR]

Cradle Address Stamping

Enable or disable cradle address stamping.

★Cradle Address Stamping = Disable

Cradle Address Stamping = Enable

Cradle Address Delimiter

This option specifies the delimiter character to be placed between the label data and the cradle address when address stamping is enabled.

NOTE: This feature only applies if "Cradle Address Stamping" on page 324 **is enabled.**

Set Cradle Address Delimiter Character

To configure this feature, scan the ENTER/EXIT PROGRAMMING MODE bar code above, then the bar code at left followed by two digits from the Alphanumeric characters in Appendix G, Keypad representing your desired character(s). End by scanning the ENTER/EXIT bar code again.

Make a mistake? Scan the CANCEL bar code to abort and not save the entry string. You can then start again at the beginning.

CANCEL

★Delimiter Character = 00 (no delimiter character)

STAR System Speed

By default, the Reader and the Base exchange data at high speed over the wireless communication channel. Reducing the speed from high to low, the radio range can be further extended. Moreover, when using low speed, the Reader can be configured to use the STAR Frequency Agility feature (see "STAR Frequency Agility" on page 326) also for the 433 MHz model (see Table 9 on page 327).

To change the STAR System Speed, follow this procedure:

1. link the Reader to the Base;
2. scan the ENTER/EXIT PROGRAMMING MODE bar code above; read either the “High speed” or “Low speed” programming label below to set the desired speed; end by scanning the ENTER/EXIT bar code again.
3. place the Reader into the Base.

The Reader and the Base will now be linked at the new programmed speed.

This feature can also be programmed using the Datalogic Aladdin tool:

1. set the STAR System Speed to “High speed” or “Low speed” through Aladdin;
2. place an unlinked Reader into the Base.

The Reader and the Base will link at the new programmed speed.

NOTE: PowerScan 433 MHz Star models do not support all combinations of STAR System Speed and STAR Frequency Agility (see "STAR Frequency Agility" on page 326**) configuration parameters. Please refer to Table 9 on page 327 for the allowed combinations.**

★STAR System Speed = High Speed

STAR System Speed = Low Speed

STAR Frequency Agility

In exceptionally noisy environments or in case of a high concentration of radio devices, the STAR system performance may be improved by enabling the STAR Frequency Agility feature. This feature changes the way the radio frequencies are used in a STAR communication system.

As in the case of the STAR System Speed, use the following procedure:

1. link the Reader to the Base;
2. scan the ENTER/EXIT PROGRAMMING MODE bar code above; read either the “Enable” or “Disable” programming label below to Enable or Disable the feature; end by scanning the ENTER/EXIT bar code again.
3. place the Reader into the Base.

The Reader and the Base will be linked and the new frequency handling strategy will be operational.

NOTE: It is possible to configure the STAR system to use a fixed channel with different frequency from the default one. Please contact Datalogic Technical Support for information about this feature. Please refer to Table 9 on page 327 for valid combinations of this feature with the STAR System Speed configuration parameter.

NOTE: PowerScan 433 MHz Star models do not support all combinations of STAR Frequency Agility and STAR System Speed (see "STAR System Speed" on page 325**) configuration parameters. Please refer to Table 9 on page 327 for the allowed combinations.**

★STAR Frequency Agility = Disable
(use default fixed channel)

STAR Frequency Agility = Enable

Table 9 - Supported combinations of STAR System Speed and STAR Frequency Agility configuration parameters

SYSTEM SPEED	FREQUENCY AGILITY	FIXED CHANNEL DIFFERENT FROM DEFAULT
433 MHz Model		
Low Speed	Yes	Yes
High Speed	No	No
910 MHz Model		
Low Speed	Yes	Yes
High Speed	Yes	Yes

CHAPTER 4
REFERENCES

This section contains explanations and examples of selected bar code features. See Configuration with Bar Codes, starting on page 44 for the actual bar code labels used to configure the reader.

SECTION CONTENTS

RS-232 PARAMETERS on page 329

- Baud Rate
- Data Bits
- Stop Bits
- Parity
- Handshaking Control

RS-232/USB COM PARAMETERS on page 330

- Intercharacter Delay
- ACK NAK Options
- ACK Character
- NAK Character
- ACK NAK Timeout Value
- ACK NAK Retry Count
- Disable Character
- Enable Character

KEYBOARD INTERFACE on page 337

- Intercode Delay
-

DATA FORMAT on page 338

- Data Editing
- Global Prefix/Suffix
- Global AIM ID
- Label ID
- Character Conversion

SCANNING FEATURES on page 346

- Scan Mode
- Scanning Active Time
- Aiming Duration Time
- Flash On Time
- Flash Off Time

LED AND BEEPER INDICATORS on page 352

- Good Read LED Duration

RF FEATURES on page 353

- Automatic Configuration Update
- RF Address Stamping
- STAR Radio Protocol Timeout

SYMBOLOGIES on page 355

- Set Length

RS-232 PARAMETERS

RS-232 ONLY

Baud Rate

Baud rate is the number of bits of data transmitted per second. Set the reader's baud rate to match the baud rate setting of the host device. With an improper baud rate setting, data may not reach the host correctly.

Data Bits

This parameter allows the reader to interface with devices requiring a 7-bit or 8-bit ASCII protocol for sending and receiving data.

Stop Bits

The stop bit(s) at the end of each transmitted character marks the end of transmission of one character and prepares the receiving device for the next character in the serial data stream. The number of stop bits selected (one or two) depends on the number the receiving terminal is programmed to accommodate. Set the number of stop bits to match host device requirements.

Parity

This feature specifies parity required for sending and receiving data. A parity check bit is the most significant bit of each ASCII coded character. Select the parity type according to host device requirements.

- Select None when no parity bit is required.
- Select Odd parity and the parity bit value is set to 0 or 1, based on data, to ensure that an odd number of 1 bits are contained in the coded character.
- Select Even parity and the parity bit value is set to 0 or 1, based on data, to ensure that an even number of 1 bits are contained in the coded character.

Handshaking Control

The data interface consists of an RS-232 port designed to operate either with or without the hardware handshaking lines, Request to Send (RTS), and Clear to Send (CTS). Handshaking Control includes the following options:

- RTS — RTS is asserted during transmissions. CTS is ignored.
- RTS/CTS — RTS is asserted during transmissions. CTS gates transmissions.
- RTS/XON/XOFF — RTS is asserted during transmissions. CTS is ignored. XON and XOFF gate transmissions.
- RTS On/CTS — RTS is always asserted. CTS gates transmissions.
- RTS/CTS Scan Control — RTS is asserted during transmissions. CTS gates transmissions and controls enable and disable state of reader.

RS-232/USB COM PARAMETERS

Intercharacter Delay

This parameter specifies the intercharacter delay between the end of one character and the beginning of the next. The delay can be set within a range of zero (0) to 990 milliseconds in 10ms increments. A setting of zero specifies no delay.

To set the delay:

1. Determine the desired setting in milliseconds.
2. Divide the desired setting by 10 (setting is in 10ms increments). Pad the result with leading zeroes to yield two digits. For example: 0 = 00, 5 = 05, 20 = 20, etc.
3. Scan the ENTER/EXIT PROGRAMMING MODE bar code to enter Programming Mode.
4. Go to page 54 and scan the bar code: SELECT INTERCHARACTER DELAY SETTING.
5. Scan the appropriate two digits from the keypad in Appendix G, that represent the duration which was determined in the steps above. You will hear a two-beep indication after the last character.

NOTE: If you make a mistake before the last character, scan the CANCEL bar code to abort and not save the entry string. You can then start again at the beginning.

6. Scan the ENTER/EXIT PROGRAMMING MODE bar code to exit.

This completes the procedure. See the following table for examples of how to set this feature.

Table 10 - Intercharacter Delay Setting Examples

STEP	ACTION	EXAMPLES			
1	**Desired Setting**	50ms	150ms	600ms	850ms
2	**Divide by 10 (pad with leading zeroes to yield two-digits)**	05	10	60	85
3	**Scan ENTER/EXIT PROGRAMMING MODE**				
4	**Scan SELECT INTERCHARACTER DELAY SETTING**				
5	**Scan two characters from** Appendix G	‘0’ and ‘5’	‘1’ and 5’	‘6’ and ‘0’	8’ and ‘5’
6	**Scan ENTER/EXIT PROGRAMMING MODE**				

ACK NAK Options

This enables/disables the ability of the reader to support the RS-232 ACK/NAK protocol. When configured, the reader and/or host sends an “ACK” when it receives data properly, and sends “NAK” when the data is in error.

Options are:

- Disable
- Enable for label transmission — The reader expects an ACK/NAK response from the host when a label is sent
- Enable for host-command acknowledge — The reader will respond with ACK/NAK when the host sends a command
- Enable for label transmission and host-command acknowledge

ACK Character

This setting specifies an ASCII character or hex value to be used as the ACK character. ASCII characters or any hex value from 0 to 0xFF can be selected.

NOTE: Setting to previously defined characters such as XON, XOFF, or host commands conflicts with normal operation of these characters. 8-bit data is not recognized when the option Data Bits page 57 **has been set as 7 Data Bits.**

1. Determine the desired character or value.
2. Use the ASCII Chart on page 411 to find the hex equivalent for the desired character/value.
3. Scan ENTER/EXIT PROGRAMMING MODE to enter Programming Mode.
4. Scan the bar code: SELECT ACK CHARACTER SETTING.
5. Scan the appropriate two alphanumeric characters from the keypad in Appendix G, that represent the desired character/value determined above. The second character will cause a two-beep indication.
6. Scan the ENTER/EXIT PROGRAMMING MODE bar code to exit.

See the table below for examples of how to set this feature.

Table 11 - ACK Character Setting Examples

STEP	ACTION	EXAMPLES			
1	**Desired Character/Value**	ACK	$	@	>
2	**Hex equivalent from ASCII Chart on** page 411	0x06	0x24	0x40	0x3E
3	**Scan ENTER/EXIT PROGRAMMING MODE**				
4	**Scan SELECT ACK CHARACTER SETTING**				
5	**Scan two characters from** Appendix G	‘0’ and ‘6’	‘2’ and ‘4’	‘4’ and ‘0’	‘3’ AND ‘E’
6	**Scan ENTER/EXIT PROGRAMMING MODE**				

NAK Character

This setting specifies an ASCII character or hex value to be used as the NAK character. ASCII characters or any hex value from 0 to 0xFF can be selected.

NOTE: Setting to previously defined characters such as XON, XOFF, or host commands conflicts with normal operation of these characters. 8-bit data is not recognized when the option Data Bits on page 57 **has been set as 7 Data Bits.**

To set this feature:

1. Determine the desired character or value.
2. Use the ASCII Chart on page 411 to find the hex equivalent for the desired character/value.
3. Scan the ENTER/EXIT PROGRAMMING MODE bar code to enter Programming Mode.
4. Scan the bar code: SELECT NAK CHARACTER SETTING.
5. Scan the appropriate two alpha-numeric characters from the keypad in Appendix G, that represent the desired character/value determined above. The second character will cause a two-beep indication.
6. Scan the ENTER/EXIT PROGRAMMING MODE bar code to exit Programming Mode.

This completes the procedure. See the table below for examples of how to set this feature.

Table 12 - NAK Character Setting Examples

STEP	ACTION	EXAMPLES			
1	**Desired Character/Value**	NAK	$	@	>
2	**Hex equivalent**	0x15	0x24	0x40	0x3E
3	**Scan ENTER/EXIT PROGRAMMING MODE**				
4	**Scan SELECT NAK CHARACTER SETTING**				
5	**Scan two characters from** Appendix G	‘1’ and ‘5’	‘2’ and ‘4’	‘4’ and ‘0’	‘3’ AND ‘E’
6	**Scan ENTER/EXIT PROGRAMMING MODE**				

ACK NAK Timeout Value

This option specifies the amount of time the reader waits for an ACK character from the host following label transmission. The selectable timeout range is 200 milliseconds to 15,000ms (15 seconds) in 200ms increments. A selection of 0 disables the timeout.

To set this value:

1. Determine the desired setting in milliseconds.
2. Divide the desired setting by 200 (setting is in 200ms increments). Pad the result with leading zeroes to yield two digits. For example: 0 = 00, 5 = 05, 20 = 20, etc.
3. Scan the ENTER/EXIT PROGRAMMING MODE bar code to enter Programming Mode.
4. Scan the bar code: SELECT ACK NAK TIMEOUT VALUE SETTING.
5. Scan the appropriate two digits from the keypad in Appendix G, that represent the duration which was determined in the steps above. You will hear a two-beep indication after the last character.

NOTE: If you make a mistake before the last character, scan the CANCEL bar code to abort and not save the entry string. You can then start again at the beginning.

6. Scan the ENTER/EXIT PROGRAMMING MODE bar code to exit Programming Mode.

This completes the procedure. See the table below for examples of how to set this feature.

Table 13 - ACK NAK Timeout Value Setting Examples

STEP	ACTION	EXAMPLES			
1	**Desired Setting**	200ms	1,000ms (1 sec.)	5200ms (5.2 sec.)	15,000ms (15 sec.)
2	**Divide by 200**	01	05	26	75
3	**Scan ENTER/EXIT PROGRAMMING MODE**				
4	**Scan SELECT ACK NAK TIMEOUT VALUE SETTING**				
5	**Scan two characters from** Appendix G	‘0’ and ‘1’	‘0’ and ‘5’	‘2’ and ‘6’	‘7’ AND ‘5’
6	**Scan ENTER/EXIT PROGRAMMING MODE**				

ACK NAK Retry Count

This feature specifies the number of times the reader retries a label transmission due to a retry condition. The selectable range is from 1 to 254 retries. A selection of 0 disables the count, and a selection of 255 specifies unlimited retries.

To set this feature:

1. Determine the desired setting.
2. Pad the number with leading zeroes to yield three digits. For example: 0 = 000, 5 = 005, 20 = 020, etc.
3. Scan the ENTER/EXIT PROGRAMMING MODE bar code to enter Programming Mode.
4. Scan the bar code: SELECT ACK NAK RETRY COUNT SETTING.
5. Scan the appropriate three digits from the keypad in Appendix G, that represent the number which was determined in the steps above. You will hear a two-beep indication after the last character.

NOTE: If you make a mistake before the last character, scan the CANCEL bar code to abort and not save the entry string. You can then start again at the beginning.

6. Scan the ENTER/EXIT PROGRAMMING MODE bar code to exit Programming Mode.

This completes the procedure. See the table below for examples of how to set this feature.

Table 14 - ACK NAK Retry Count Setting Examples

STEP	ACTION	EXAMPLES			
1	**Desired Setting**	Disable Retry Count	3 Retries	54 Retries	Unlimited Retries
2	**Pad with leading zero(es)**	000	003	054	255
3	**Scan ENTER/EXIT PROGRAMMING MODE**				
4	**Scan SELECT ACK NAK RETRY COUNT SETTING**				
5	**Scan three characters from** Appendix G	‘0’, ‘0’ and ‘0’	‘0’, ‘0’ and ‘3’	‘0’, ‘5’ and ‘4’	‘2’, ‘5’ and ‘5’
6	**Scan ENTER/EXIT PROGRAMMING MODE**				

Disable Character

Specifies the value of the RS-232 host command used to disable the reader.

ASCII characters or any hex value from 0 to 0xFF can be selected.

NOTE: Setting to previously defined characters such as XON, XOFF, or host commands conflicts with normal operation of these characters. 8-bit data is not recognized when the option "Data Bits" on page 49 **has been set as 7 Data Bits.**

To set the value:

1. Determine the desired character or value. A setting of 0xFF indicates the Disable Character is not used (not available).
2. Use the ASCII Chart on page 411 to find the hex equivalent for the desired character/value.
3. Scan the ENTER/EXIT PROGRAMMING MODE bar code to enter Programming Mode.
4. Scan the bar code: SELECT DISABLE CHARACTER SETTING on page 60.
5. Scan the appropriate two alphanumeric characters from the keypad in Appendix G, that represent the desired character/value determined above. The second character will cause a two-beep indication.
6. Scan the ENTER/EXIT PROGRAMMING MODE bar code to exit Programming Mode.

This completes the procedure. See the table below for examples of how to set this feature.

Table 15 -Disable Character Setting Examples

STEP	ACTION	EXAMPLES			
1	**Desired character/value**	'd'	'}'	'D'	Disable Command Not Used
2	**Hex equivalent from ASCII Chart on** page 411	0x64	0x7D	0x44	0xFF
3	**Scan ENTER/EXIT PROGRAMMING MODE**				
4	**Scan SELECT DISABLE CHARACTER VALUE SETTING**				
5	**Scan three characters from** Appendix G	'6' and '4'	'7' and 'D'	'4' and '4'	'F' and 'F'
6	**Scan ENTER/EXIT PROGRAMMING MODE**				

Enable Character

Specifies the value of the RS-232 host command used to enable the reader.

ASCII characters or any hex value from 0 to 0xFF can be selected.

NOTE: Setting to previously defined characters such as XON, XOFF, or host commands conflicts with normal operation of these characters. 8-bit data is not recognized when the option "Data Bits" on page 49 **has been set as 7 Data Bits.**

To set the value:

1. Determine the desired character or value. A setting of 0xFF indicates the Enable Character is not used (not available).
2. Use the ASCII Chart in Appendix I to find the hex equivalent for the desired character/value.
3. Scan the ENTER/EXIT PROGRAMMING MODE bar code to enter Programming Mode.
4. Scan the bar code: SELECT ENABLE CHARACTER SETTING on page 60.
5. Scan the appropriate two alphanumeric characters from the keypad in Appendix G, that represent the desired character/value determined above. The second character will cause a two-beep indication.
6. Scan the ENTER/EXIT PROGRAMMING MODE bar code to exit Programming Mode.

This completes the procedure. See the table below for examples of how to set this feature.

Table 16 - Enable Character Setting Examples

STEP	ACTION	EXAMPLES			
1	**Desired character/value**	‘e’	‘}’	‘E’	Enable Command Not Used
2	**Hex equivalent from ASCII Chart on** page 411	0x65	0x7D	0x45	0xFF
3	**Scan ENTER/EXIT PROGRAMMING MODE**				
4	**Scan SELECT ENABLE CHARACTER VALUE SETTING**				
5	**Scan two characters from** Appendix G	‘6’ and ‘5’	‘7’ and ‘D’	‘4’ and ‘5’	‘F’ and ‘F’
6	**Scan ENTER/EXIT PROGRAMMING MODE**				

KEYBOARD INTERFACE

Intercode Delay

Specifies the delay between labels transmitted to the host for this interface. The selectable range for this feature is from 0 to 99 seconds.

Follow these instructions to set this feature:

1. Determine the desired setting.
2. Pad the number with leading zeroes to yield two digits. For example: 0 = 00, 5 = 05, 20 = 20, etc
3. Go to page 86 and scan the ENTER/EXIT PROGRAMMING MODE bar code to enter Programming Mode.
4. Scan the bar code: SELECT INTERCODE DELAY SETTING on page 86.
5. Scan the appropriate two digits from the keypad in Appendix G, that represent the duration which was determined in the steps above. You will hear a two-beep indication after the last character.

NOTE: If you make a mistake before the last character, scan the CANCEL bar code to abort and not save the entry string. You can then start again at the beginning.

6. Scan the ENTER/EXIT PROGRAMMING MODE bar code to exit Programming Mode.

This completes the procedure. See the table below for examples of how to set this feature.

Table 17 - Intercode Delay Setting Examples

STEP	ACTION	EXAMPLES			
1	**Desired Setting**	No Delay	5 seconds	60 seconds	99 seconds
2	**Pad with leading zero(es)**	00	05	60	99
3	**Scan ENTER/EXIT PROGRAMMING MODE**				
4	**Scan SELECT INTERCODE DELAY SETTING**				
5	**Scan two characters from** Appendix G	‘0’ and ‘0’	‘0’ and ‘5’	‘6’ and ‘0’	‘9’ and ‘9’
6	**Scan ENTER/EXIT PROGRAMMING MODE**				

DATA FORMAT

Data Editing

When a bar code is scanned, additional information can be sent to the host computer along with the bar code data. This combination of bar code data and supplementary user-defined data is called a “message string.” The Data Editing features can be used to build specific user-defined data into a message string.

There are several types of selectable data characters that can be sent before and after scanned data. You can specify if they should be sent with all symbologies, or only with specific symbologies. The following shows the available elements you can add to a message string:

Figure 13 - Breakdown of a Message String

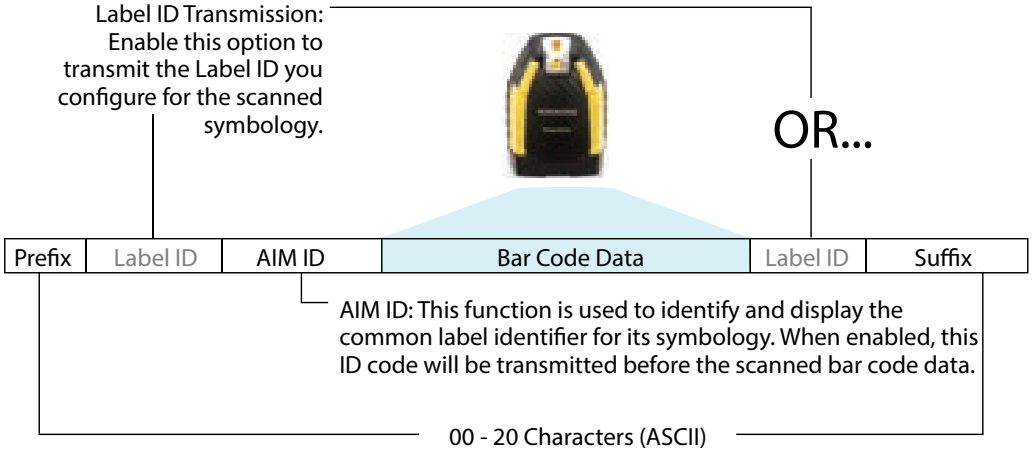

NOTE: Additional advanced editing is available. See the Advanced formatting features in the Datalogic Aladdin configuration software, or contact "Technical Support" on page xvii **for more information.**

Please Keep In Mind...

- Modifying a message string is not a mandatory requirement. Data editing is a sophisticated feature allowing highly customizable output for advanced users. Factory default settings for data editing is typically set to NONE.
- A prefix or suffix may be applied only to a specified symbology (reference 1D Symbologies, starting on page 140) or across all symbologies (set via the Global features in Configuration with Bar Codes, starting on page 44).
- You can add any character from the ASCII Chart on page 411 (from 00-FF) on the inside back cover of this manual as a prefix, suffix or Label ID.
- Enter prefixes and suffixes in the order in which you want them to appear on the output.

Global Prefix/Suffix

Up to 20 ASCII characters may be added as a prefix (in a position before the bar code data) and/or as a suffix (in a position following the bar code data) as indicated.

Figure 14 Prefix and Suffix Positions

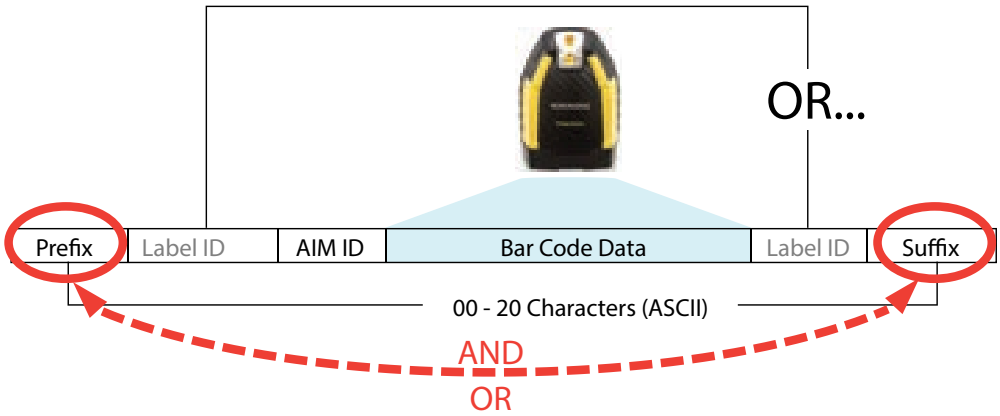

Example: Setting a Prefix

In this example, we'll set a prefix for all symbologies.

1. Determine which ASCII character(s) are to be added to scanned bar code data. In this example, we'll add a dollar sign ('$') as a prefix.
2. Scan the ENTER/EXIT PROGRAMMING MODE bar code, then scan the SET GLOBAL PREFIX bar code.
3. Reference the ASCII Chart on page 411 in Appendix I to find the hex value assigned to the desired character. The corresponding hex number for the '$' character is 24. To enter this selection code, scan the '2' and '4' bar codes from Appendix G.

NOTE: If you make a mistake before the last character, scan the CANCEL bar code to abort and not save the entry string. You can then start again at the beginning.

4. If less than the expected string of 20 characters are selected, scan the ENTER/EXIT bar code to terminate the string.
5. Scan the ENTER/EXIT bar code once again to exit Programming Mode.

The resulting message string would appear as follows:

Scanned bar code data: **12345**

Resulting message string output: **$12345**

Global AIM ID

NOTE: This feature enables/disables addition of AIM IDs for all symbology types.

AIM label identifiers (as opposed to custom characters you select yourself as with label identifiers) can be included with scanned bar code data. AIM label identifiers consist of three characters as follows:

- A close brace character (ASCII ']'), followed by...
- A code character (see the table below), followed by...
- A modifier character (the modifier character is symbol dependent).

SYMBOLOGY	CHAR	SYMBOLOGY	CHAR
UPC/EAN	E[a]	Code 128/GS1-128	C
Code 39 and Code 32	A	DataBar Omnidirectional, DataBar Expanded	e
Codabar	F	Standard 2 of 5	S
Interleaved 2 of 5	I	ISBN	X[b]
Code 93	G	Code 11	H

a. UPC-A and UPC-E labels are converted to EAN 13 when adding AIM IDs.
b. ISBN (X with a 0 modifier character)

Figure 15 AIM ID

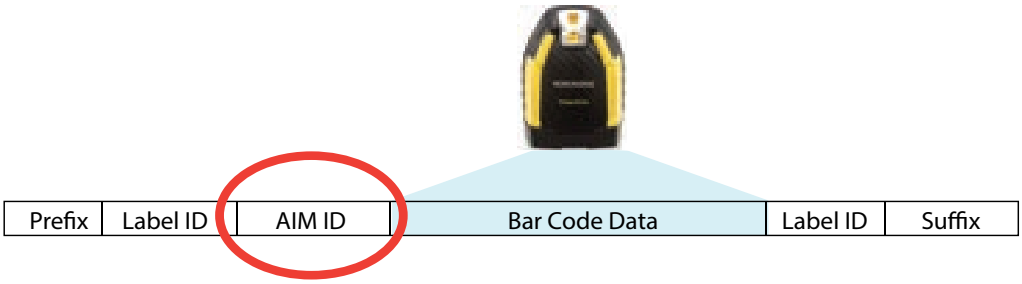

Label ID

A Label ID is a customizable code of up to three ASCII characters (each can be one of hex 0x01-0xFF), used to identify a bar code (symbology) type. It can be appended previous to or following the transmitted bar code data depending upon how this option is enabled. This feature provides options for configuring custom Label IDs as a pre-loaded set or individually per symbology (see "Label ID: Set Individually Per Symbology" on page 108). If you wish to program the reader to always include an industry standard label identifier for ALL symbology types, see "Global AIM ID" on page 106.

Label ID: Pre-loaded Sets

The following table lists the pre-loaded label ID sets for the USA and Europe.

Table 18 - Label ID Pre-loaded Sets

SYMBOLOGY	USA LABEL ID SET		EU LABEL ID SET	
	ASCII character	Hex value	ASCII character	Hexadecimal value
ABC Codabar	S	530000	S	530000
CODABAR	%	250000	R	520000
Code 39 CIP HR	Y	590000	Y	590000
Code 93	&	260000	U	550000
Code 11	CE	434500	b	620000
Code 128	#	230000	T	540000
Code 32	A	410000	X	580000
Code 39	*	2A0000	V	560000
Datalogic 2of5	s	730000	s	730000
EAN13	F	460000	B	420000
EAN13 P2	F	460000	L	4C0000
EAN13 P5	F	460000	M	4D0000
EAN8	FF	464600	A	410000
EAN8 P2	FF	464600	J	4A0000
EAN8 P5	FF	464600	K	4B0000
FOLLETT 2OF5	O	4F0000	O	4F0000
GS1 DATABAR EXPANDED	RX	525800	t	740000
GS1 DATABAR LIMITED	RL	524C00	v	760000
GS1 DATABAR OMNIDIRECTIONAL	R4	523400	u	750000
GS1-128		000000	k	6B0000
I2OF5	i	690000	N	4E0000
IATA	IA	494100	&	260000
Industrial 2 of 5	W	570000	W	570000
Interleaved 2 of 5	e	650000	e	650000
ISBN	l	490000	@	400000
ISBT128	f	660000	f	660000

SYMBOLOGY	USA LABEL ID SET		EU LABEL ID SET	
ISSN	n	6E0000	n	6E0000
MSI	@	400000	Z	5A0000
S25	s	730000	P	500000
UPCA	A	410000	C	430000
UPCA P2	A	410000	F	460000
UPCA P5	A	410000	G	470000
UPCE	E	450000	D	440000
UPCE P2	E	450000	H	480000
UPCE P5	E	450000	I	490000
OCR-A	o	6F0000	$o	246F00
OCR-B	o	6F0000	$p	247000
MICR	o	6F0000	$m	246D00

Label ID: Set Individually Per Symbology

To configure a Label ID individually for a single symbology:

1. Scan the ENTER/EXIT bar code.
2. Select Label ID position as either BEFORE (Enable as Prefix) or AFTER (Enable as suffix) by scanning the appropriate bar code in the section "Label ID Control" on page 108. Reference Figure 16 for Label ID positioning options if multiple identification features are enabled.
3. Scan a bar code to select the symbology for which you wish to configure a custom Label ID from the section "Label ID Symbology Selection" on page 109.
4. Determine the desired character(s) (you may choose up to three) which will represent the Label ID for the selected symbology.
5. Turn to the ASCII Chart on page 411 on the inside back cover of this manual and find the equivalent hex digits associated with your choice of Label ID. For example, if you wish to select an equal sign (=) as a Label ID, the chart indicates its associated hex characters as 3D. Turn to Keypad, in Appendix G, and scan the bar codes representing the hex characters determined. For the example given, the characters '3' and 'D' would be scanned. More examples of Label ID settings are provided in Table 19 on page 344.

NOTE: If you make a mistake before the last character, scan the CANCEL bar code to abort and not save the entry string. You can then start again at the beginning.

6. Scan the ENTER/EXIT bar code to exit Label ID entry.
7. Scan the ENTER/EXIT bar code once again to exit Programming Mode.

This completes the steps to configure a Label ID for a given symbology.

Figure 16 Label ID Position Options

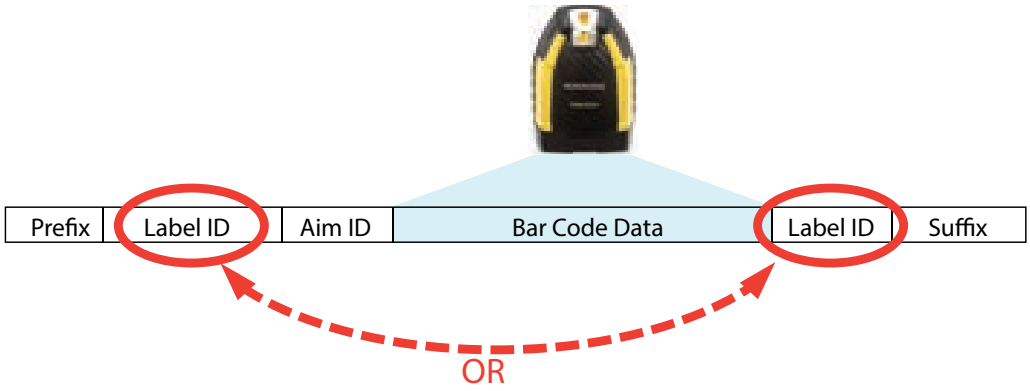

Label ID: Set Individually Per Symbology — continued

Table 19 Label ID Examples

STEP	ACTION	EXAMPLES			
1	Scan the ENTER/EXIT bar code	(Reader enters Programming Mode)			
2	Determine placement of the Label ID characters BEFORE or AFTER with regard to scanned data using Label ID Control, starting on page 108	Enable as Prefix	Enable as Suffix	Enable as Prefix	Enable as Suffix
3	Scan the bar code selecting the symbology type you wish to designate label ID characters for using Label ID Symbology Selection, starting on page 109	GS1 DataBar Omnidirectional	Code 39	Interleaved 2 of 5	Code 32
4	Custom Label ID example (desired characters):	D B *	= C 3	+	PH
5	Find hex equivalents from the ASCII table (inside back cover), then scan in these digits/characters using the bar codes in the section: Keypad, starting on page 404. f you make a mistake before the last character, scan the CANCEL bar code to abort and not save the entry string. You can then start again at the beginning.	44 42 2A	3D 43 33	2B	50 48
6	Scan the ENTER/EXIT bar code	(Reader exits Label ID entry)			
7	Scan the ENTER/EXIT bar code once again	(Reader exits Programming Mode)			
Result:		DB*[bar code data]	[bar code data]=C3	+[bar code data]	[bar code data]PH

Character Conversion

Character conversion is an eight byte configuration item. The eight bytes are 4 character pairs represented in hexadecimal ASCII values. The first character in the pair is the character that will be converted. The second character in the pair is the character to convert to. If the character to convert in a pair is FF, then no conversion is done.

For example, if you have the character conversion configuration item set to the following: 41423132FFFFFFFF

The first pair is 4142 or AB (41 hex is an ASCII capital A, 42 hex is an ASCII capital B) and the second pair is 3132 or 12 (31 hex is an ASCII 1, 32 is an ASCII 2). The other two pairs are FFFF and FFFF.

With the label, AB12BA21, it would look as follows after the character

conversion: BB22BB22.

The A characters were converted to B characters and the 1 characters were converted to 2 characters. Nothing is done with the last two character pairs, since they are all FF.

To set Character Conversion:

1. Scan the ENTER/EXIT bar code.
2. Scan the bar code for "Character Conversion" on page 105
3. Determine the desired string. Sixteen positions must be determined as in the above example. Next, turn to the ASCII Chart on page 411 on the inside back cover of this manual and find the equivalent hex digits needed to fulfill the string.
4. Turn to Appendix G, Keypad and scan the bar codes representing the hex characters determined in the previous step.
5. Scan the ENTER/EXIT bar code to exit Programming Mode.

NOTE: If less than the expected string of 16 characters are selected, scan the ENTER/EXIT bar code twice to accept the selections and exit Programming Mode.

SCANNING FEATURES

Scan Mode

Selects the scan operating mode for the reader. Selections are:

Trigger Single: When the trigger is pulled, scanning is activated until one of the following occurs:

- Scanning Active Time has elapsed
- a label has been read
- the trigger is released

This mode is associated with typical handheld reader operation: when the trigger is pulled, scanning starts and the product scans until the trigger is released, or a label is read, or the maximum Scanning Active Time has elapsed. Motion Sense is active[1].

Trigger Hold Multiple: When the trigger is pulled, scanning starts and the product scans until the trigger is released or until scanning active time has elapsed. Reading a label does not disable scanning. Double Read Timeout prevents undesired multiple reads of the same label while in this mode. Motion Sense is active[1].

Trigger Pulse Multiple: When the trigger is pulled, continuous scanning is activated until the trigger has been released and pulled again or until scanning active time has elapsed. Double Read Timeout prevents undesired multiple reads of the same label while in this mode. Motion Sense is active[1].

Flashing: The reader flashes[2] on and off regardless of the trigger status. Flash rate is controlled by Flash On Time and Flash Off Time. Code reading takes place only during the Flash On time. When Flash is OFF scanning is deactivated. Double Read Timeout prevents undesired multiple reads.

NOTE: Using the AR model in Flashing mode at high operating temperatures, close to 50°, may result in a degradation of performance.

Always On: No trigger pull is required to read a bar code. Scanning is continually on. Double Read Timeout prevents undesired multiple reads of the same label while in this mode. Not available for AR model.

Stand Mode/Object Detection: No trigger pull is required to read a bar code. Scanning turns on automatically when an item is placed in reader's field of view. While in a stand watch state, the reader illumination LED goes from dim to maximum bright. The Aiming Pattern is always on to show the optimum reading area. Scanning continues until a label is read or “Scanning Active Time” is reached. Not available for AR model.

Retained Trigger Hold Multiple: Same as Trigger Hold Multiple but all decoded labels are transmitted when the trigger is released. The labels can be sorted before transmission. When the reader is configured in Retained Trigger Hold Multiple, it is possible to set the parameter Multiple Labels Ordering by Code Symbology to specify the order multiple labels are transmitted by symbology type. Motion Sense is active[1].

1. If the scanner detects motion the aiming pattern is turned on. In AR models, the aiming system turns on with a partial pull of the trigger.
2. Controlled by Flash On Time.

To configure the code symbology order, choose the corresponding digits from the following table:

Table 20 - Multiple Labels Ordering by Code Symbology

HEX VALUE		CODE SYMBOLOGY	HEX VALUE		CODE SYMBOLOGY
0x00	=	Any Type	0x20	=	ISBN
0x01	=	UPC-A	0x22	=	Interleaved 2/5
0x02	=	UPC-E	0x23	=	Codabar
HEX VALUE		**CODE SYMBOLOGY**	**HEX VALUE**		**CODE SYMBOLOGY**
0x03	=	EAN-8	0x24	=	Code 39
0x04	=	EAN-13	0x25	=	Code 32
0x0A	=	GS1-128	0x26	=	MSI-Plessey
0x0C	=	Code 128	0x27	=	Code 93
0x0D	=	Maxicode	0x28	=	GS1 DataBar Expanded
0x0E	=	Datamatrix	0x29	=	GS1 DataBar Omnidirectional
0x10	=	QR	0x2A	=	GTIN
0x14	=	UPC-E with P2 Addon	0x2B	=	GTIN with P2 Addon
0x15	=	UPC-E with P5 Addon	0x2C	=	GTIN with P5 Addon
0x17	=	UPC-A with P2 Addon	0x2E	=	Standard 2/5
0x18	=	UPC-A with P5 Addon	0x2F	=	PDF 417
0x1A	=	EAN-8 with P2 Addon	0x30	=	Code 11
0x1B	=	EAN-8 with P5 Addon	0x31	=	IATA
0x1D	=	EAN-13 with P2 Addon	0x32	=	Micro PDF
0x1E	=	EAN-13 with P5 Addon	0x33	=	GS1 DataBar Limited
HEX VALUE		**CODE SYMBOLOGY**	**HEX VALUE**		**CODE SYMBOLOGY**
0x34	=	GS1 DataBar Limited Composite	0x49	=	ABC Codabar
0x35	=	GS1 DataBar Omnidirectional Composite	0x4A	=	Interleaved 2/5 CIP/HR
0x36	=	GS1 DataBar Expanded Composite	0x4C	=	Industrial 2/5
0x3D	=	Code 16K	0x4D	=	Aztec
0x40	=	Anker Plessey	0x4E	=	UPC-E Composite
0x41	=	ISSN	0x4F	=	UPC-A Composite
0x42	=	ISBT 128	0x50	=	EAN-8 Composite
0x45	=	Follet 2/5	0x51	=	EAN-13 Composite
0x48	=	Code 39/CIP	0x52	=	GS1-128 Composite

Scanning Active Time

This setting specifies the amount of time that the reader stays in scan ON state once the state is entered. The range for this setting is from 1 to 255 seconds in 1-second increments.

Follow these instructions to set this feature:

1. Determine the desired setting.
2. Pad the result with leading zeroes to yield three digits. For example: 0 = 000, 5 = 005, 20 = 020, etc.
3. Scan the ENTER/EXIT PROGRAMMING MODE bar code to enter Programming Mode.
4. Scan the bar code: SELECT SCANNING ACTIVE TIME SETTING on page 118.
5. Scan the appropriate three digits from the keypad in Appendix G, that represent the duration which was determined in the steps above. You will hear a two-beep indication after the last character.

NOTE: If you make a mistake before the last character, scan the CANCEL bar code to abort and not save the entry string. You can then start again at the beginning.

6. Scan the ENTER/EXIT PROGRAMMING MODE bar code to exit Programming Mode.

This completes the procedure. See the table below for examples of how to set this feature.

Table 21 Scanning Active Time Setting Examples

STEP	ACTION	EXAMPLES			
1	**Desired Setting**	1 Second	90 Sec. (1.5 min.)	180 Sec. (3 min.)	255 Seconds (4.25 min.)
2	**Pad leading zero(es)**	001	090	180	255
3	**Scan ENTER/EXIT PROGRAMMING MODE**				
4	**Scan SELECT SCANNING ACTIVE TIME SETTING**				
5	**Scan three characters from** Appendix G	‘0’, ‘0’ and ‘1’	‘0’, ‘9’ and ‘0’	‘1’, ‘8’ and ‘0’	‘2’, ‘5’ and ‘5’
6	**Scan ENTER/EXIT PROGRAMMING MODE**				

Aiming Duration Time

Specifies the frame of time the aiming pointer remains on after decoding a label, when in trigger single mode. The range for this setting is from 1 to 255 seconds in 1-second increments.

Follow these instructions to set this feature:

1. Determine the desired setting.
2. Pad the result with leading zeroes to yield three digits. For example: 0 = 000, 5 = 005, 20 = 020, etc.
3. Scan the ENTER/EXIT PROGRAMMING MODE bar code to enter Programming Mode.
4. Scan the bar code: SELECT AIMING DURATION TIME SETTING.
5. Scan the appropriate two digits from the keypad in Appendix G, that represent the duration which was determined in the steps above. You will hear a two-beep indication after the last character.

NOTE: If you make a mistake before the last character, scan the CANCEL bar code to abort and not save the entry string. You can then start again at the beginning.

6. Scan the ENTER/EXIT PROGRAMMING MODE bar code to exit Programming Mode.

This completes the procedure. See the following table for some examples of how to set this feature.

Table 22 Aiming Duration Time Setting Examples

STEP	ACTION	EXAMPLES			
1	**Desired Setting**	1 Second	90 Sec. (1.5 min.)	180 Sec. (3 min.)	255 Seconds (4.25 min.)
2	**Pad leading zero(es)**	001	090	180	255
3	**Scan ENTER/EXIT PROGRAMMING MODE**				
4	**Scan SELECT AIMING DURATION TIME SETTING**				
5	**Scan three characters from** Appendix G	‘0’, ‘0’ and ‘1’	‘0’, ‘9’ and ‘0’	‘1’, ‘8’ and ‘0’	‘2’, ‘5’ and ‘5’
6	**Scan ENTER/EXIT PROGRAMMING MODE**				

Flash On Time

This feature specifies the ON time for the indicator LED while in Flash Mode. The selectable range is 100 to 9,900 milliseconds (0.1 to 9.9 seconds), in 100 millisecond increments.

Follow these instructions to set this feature.

1. Determine the desired setting in milliseconds.
2. Divide the desired setting by 100 (setting is in 100ms increments). Pad the result with leading zeroes to yield two digits. For example: 0 = 00, 5 = 05, 20 = 20, etc.
3. Scan the ENTER/EXIT PROGRAMMING MODE bar code to enter Programming Mode.
4. Scan the bar code: SELECT FLASH ON TIME SETTING on page 118.
5. Scan the appropriate two digits from the keypad in Appendix G, that represent the duration which was determined in the steps above. You will hear a two-beep indication after the last character.

NOTE: If you make a mistake before the last character, scan the CANCEL bar code to abort and not save the entry string. You can then start again at the beginning.

6. Scan the ENTER/EXIT PROGRAMMING MODE bar code to exit Programming Mode.

This completes the procedure. See the following table for examples of how to set this feature.

Table 23 Flash On Time Setting Examples

STEP	ACTION	EXAMPLES			
1	**Desired Setting**	500ms	1,000ms (1 sec.)	5200ms (5.2 sec.)	9,900ms (9.9 sec.)
2	**Divide by 100 (and pad with leading zeroes to yield two digits)**	05	10	52	99
3	**Scan ENTER/EXIT PROGRAMMING MODE**				
4	**Scan SELECT FLASH ON TIME SETTING**				
5	**Scan two characters from** Appendix G	‘0’ and ‘5’	‘1’ and ‘0’	‘5’ and ‘2’	‘9’ and ‘9’
6	**Scan ENTER/EXIT PROGRAMMING MODE**				

Flash Off Time

This feature specifies the OFF time for the indicator LED while in Flash Mode. The selectable range is 100 to 9,900 milliseconds (0.1 to 9.9 seconds), in 100 millisecond increments.

Follow these instructions to set this feature.

1. Determine the desired setting in milliseconds.
2. Divide the desired setting by 100 (setting is in 100ms increments). Pad the result with leading zeroes to yield two digits. For example: 0 = 00, 5 = 05, 20 = 20, etc.
3. Scan the ENTER/EXIT PROGRAMMING MODE bar code to enter Programming Mode.
4. Scan the bar code: SELECT FLASH OFF TIME SETTING on page 119.
5. Scan the appropriate two digits from the keypad in Appendix G, that represent the duration which was determined in the steps above. You will hear a two-beep indication after the last character.

NOTE: If you make a mistake before the last character, scan the CANCEL bar code to abort and not save the entry string. You can then start again at the beginning.

6. Scan the ENTER/EXIT PROGRAMMING MODE bar code to exit Programming Mode.

This completes the procedure. See the following table for examples of how to set this feature.

Table 24 Flash Off Time Setting Examples

STEP	ACTION	EXAMPLES			
1	**Desired Setting**	500ms	1,000ms (1 sec.)	5200ms (5.2 sec.)	9,900ms (9.9 sec.)
2	**Divide by 100 (and pad with leading zeroes to yield two digits)**	05	10	52	99
3	**Scan ENTER/EXIT PROGRAMMING MODE**				
4	**Scan SELECT FLASH OFF TIME SETTING**				
5	**Scan two characters from** Appendix G	‘0’ and ‘5’	‘1’ and ‘0’	‘5’ and ‘2’	‘9’ and ‘9’
6	**Scan ENTER/EXIT PROGRAMMING MODE**				

LED AND BEEPER INDICATORS

Good Read LED Duration

This feature specifies the amount of time that the Good Read LED remains on following a good read. The good read LED on time can be set within a range of 10 milliseconds to 2,550 milliseconds (0.001 to 2.55 seconds) in 100ms increments.

Follow these instructions to set this feature:

1. Determine the desired setting in milliseconds. A setting of 0 means that the good read LED stays on until the next time the trigger is pulled.
2. Divide the desired setting by 10 (setting is in 100ms increments). Pad the result with leading zeroes to yield three digits. For example: 0 = 000, 5 = 000, 20 = 020, etc.
3. Go to page 130 and scan the ENTER/EXIT PROGRAMMING MODE bar code to enter Programming Mode.
4. Scan the bar code: SELECT GOOD READ LED DURATION SETTING.
5. Scan the appropriate two digits from the keypad in Appendix G, that represent the duration which was determined in the steps above. You will hear a two-beep indication after the last character.

NOTE: If you make a mistake before the last character, scan the CANCEL bar code to abort and not save the entry string. You can then start again at the beginning.

6. Scan the ENTER/EXIT PROGRAMMING MODE bar code to exit Programming Mode.

This completes the procedure. See the following table for some examples of how to set this feature.

Table 25 Good Read LED Duration Setting Example

STEP	ACTION	EXAMPLES			
1	**Desired Setting**	Good Read LED stays on until next trigger pull (00)	20ms	150ms	2550ms (2.55 sec.)
2	**Divide by 10 (and pad with leading zeroes)**	000	002	015	255
3	**Scan ENTER/EXIT PROGRAMMING MODE**				
4	**Scan SELECT GOOD READ LED DURATION SETTING**				
5	**Scan three characters from** Appendix G	‘0’, ‘0’ and ‘0’	‘0’, ‘0’ and ‘2’	‘0’, ‘1’ and ‘5’	‘2’, ‘5’ and ‘5’
6	**Scan ENTER/EXIT PROGRAMMING MODE**				

RF FEATURES

Automatic Configuration Update

When this feature is enabled, the base station and reader will keep their configurations synchronized. If a reader's configuration is altered by reading programming labels, this change is automatically transferred and updated in a linked base station. Likewise, if the base station's configuration is changed using Aladdin or by host commands, then the reader's configuration will automatically be updated if this feature is enabled.

RF Address Stamping

Source Radio Address Delimiter Character

This option specifies the delimiter character to be placed between the label data and radio address when address stamping is enabled.

NOTE: This feature only applies if "Source Radio Address Transmission" on page 306 **is enabled**

Follow these instructions to select the delimiter character:

1. Determine the desired character, then find its hexadecimal equivalent on the ASCII Chart on page 411. A setting of 00 specifies no delimiter character.
2. Scan the ENTER/EXIT PROGRAMMING MODE bar code to enter Programming Mode.
3. Scan the bar code: SET SOURCE RADIO ADDRESS DELIMITER CHARACTER.
4. Scan the appropriate two digits from the keypad in Appendix G, that represent the hexadecimal characters which were determined in the steps above. You will hear a two-beep indication after the last character.

NOTE: If you make a mistake before the last character, scan the CANCEL bar code to abort and not save the entry string. You can then start again at the beginning.

5. Scan the ENTER/EXIT PROGRAMMING MODE bar code to exit.

Table 26 Source Radio Address Delimiter Character Setting Examples

STEP	ACTION	EXAMPLES			
1	**Desired Setting**	No delimiter character	, (comma)	- (dash)	/ (slash)
2	**Scan ENTER/EXIT PROGRAMMING MODE**				
3	**Scan SET SOURCE RADIO ADDRESS DELIMiTER CHARACTER**				
4	**Scan Two Characters From** Appendix G	'0' and '0'	'2' and 'C'	'2' and 'D'	'2' AND 'F'
5	**Scan ENTER/EXIT PROGRAMMING MODE**				

STAR Radio Protocol Timeout

This parameter sets the valid wait time before transmission between the handheld reader and Base Station is considered failed.

When setting this parameter, take into consideration the radio traffic (number of readers in the same area). The selectable range for this feature is from 02 to 25 seconds.

Follow these instructions to set this feature:

1. Determine the desired setting.
2. Pad the number with leading zeroes to yield two digits. For example: 2 = 02, 5 = 05, 25 = 25, etc
3. Scan the ENTER/EXIT PROGRAMMING MODE barcode to enter Programming Mode.
4. Scan the barcode: SELECT RADIO PROTOCOL TIMEOUT.
5. Scan the appropriate two digits from the keypad in Appendix G, that represent the duration which was determined in the steps above. You will hear a two-beep indication after the last character.

NOTE: If you make a mistake before the last character, scan the CANCEL bar code to abort and not save the entry string. You can then start again at the beginning.

6. Scan the ENTER/EXIT PROGRAMMING MODE barcode to exit Programming Mode.

This completes the procedure. See following table for some examples of how to set this feature.

Table 27 STAR Radio Protocol Timeout Examples

STEP	ACTION	EXAMPLES			
1	**Desired Setting**	2 Seconds	5 Seconds	10 Seconds	25 Seconds
2	**Pad with leading zero(es)**	2	5	10	25
3	**Scan ENTER/EXIT PROGRAMMING MODE**				
4	**Scan SELECTSTAR RADIO PROTOCOL TIMEOUT SETTING**				
5	**Scan two characters from** Appendix G	‘0’ and ‘2’	‘0’ and ‘5’	‘1’ and ‘0’	‘2’ AND ‘5’
5	**Scan ENTER/EXIT PROGRAMMING MODE**				

SYMBOLOGIES

Set Length

Length Control allows you to select either variable length decoding or fixed length decoding for the specified symbology.

Variable Length: For variable length decoding, a minimum and maximum length may be set.

Fixed Length: For fixed length decoding, two different lengths may be set.

Set Length 1

This feature specifies one of the bar code lengths for a given symbology. Length 1 is the minimum label length if in Variable Length Mode, or the first fixed length if in Fixed Length Mode.

Reference the 1D Symbologies, starting on page 140 to view the selectable range (number of characters) for the symbology being set.

Follow these instructions to set this feature:

1. Determine the desired character length. Pad the number with leading zeroes to yield two digits. For example: 0 = 00, 5 = 05, 20 = 20, etc.
2. Scan the ENTER/EXIT PROGRAMMING MODE bar code to enter Programming Mode.
3. Scan the “Select Length 1 Setting” for the symbology being set.
4. Scan the appropriate two digits from the keypad in Appendix G, that represent the length setting which was determined in the steps above. You will hear a two-beep indication after the last character.

NOTE: If you make a mistake before the last character, scan the CANCEL bar code to abort and not save the entry string. You can then start again at the beginning.

5. Scan the ENTER/EXIT PROGRAMMING MODE bar code to exit Programming Mode.

This completes the procedure. See the following table for examples of how to set this feature.

Table 28 Length 1 Setting Examples

STEP	ACTION	EXAMPLES			
1	**Desired Setting**	01 Character	07 Character	52 Character	74 Character
2	**Scan ENTER/EXIT PROGRAMMING MODE**				
3	**Scan SELECT LENGTH 1 SETTING for the desired symbology**				
4	**Scan two characters from** Appendix G	‘0’ and ‘1’	‘0’ and ‘7’	‘5’ and ‘2’	‘7’ AND ‘4’
5	**Scan ENTER/EXIT PROGRAMMING MODE**				

Set Length 2

This feature specifies one of the bar code lengths for a given symbology. Length 2 is the maximum label length if in Variable Length Mode, or the second fixed length if in Fixed Length Mode.

Reference the 1D Symbologies, starting on page 140 to view the selectable range (number of characters) for the symbology being set. A setting of 00 specifies to ignore this length (only one fixed length).

Follow these instructions to set this feature:

1. Determine the desired character length. Pad the number with leading zeroes to yield two digits. For example: 0 = 00, 5 = 05, 20 = 20, etc.
2. Scan the ENTER/EXIT PROGRAMMING MODE bar code to enter Programming Mode.
3. Scan the “Select Length 2 Setting” for the symbology being set.
4. Scan the appropriate two digits from the keypad in Appendix G, that represent the length setting which was determined in the steps above. You will hear a two-beep indication after the last character.

NOTE: If you make a mistake before the last character, scan the CANCEL bar code to abort and not save the entry string. You can then start again at the beginning.

5. Scan the ENTER/EXIT PROGRAMMING MODE bar code to exit Programming Mode.

This completes the procedure. See the following table for examples of how to set this feature.

Table 29 Length 2 Setting Examples

STEP	ACTION	EXAMPLES			
1	**Desired Setting**	00 (ignore second length)	07 Character	52 Character	74 Character
2	**Scan ENTER/EXIT PROGRAMMING MODE**				
3	**Scan SELECT LENGTH 2 SETTING**				
4	**Scan two characters from** Appendix G	‘0’ and ‘0’	‘0’ and ‘7’	‘5’ and ‘2’	‘7’ AND ‘4’
5	**Scan ENTER/EXIT PROGRAMMING MODE**				

CHAPTER 5
MESSAGE FORMATTING

MESSAGE FORMATTING

NOTE: Message Formatting is available for PM9600 models only.

A message from the Host to the base must follow these rules:

- If Address stamping options or address delimiter are enabled on the base, the Host reply must have address field and delimiter too. Otherwise the message will be ignored. Address delimiter is present only when address stamping is enabled.
- Address stamping is necessary to correctly route the message to the PowerScan PM9600, especially when more than one handheld is linked to the same base. Address stamping could be disabled if the system is in point-to-point configuration. If address stamping is not enabled, the messages are addressed to the first handheld linked to the base.
- 35 is the limit for a broadcast message. The maximum message length to a specific gun is 255.
- Messages end with “CR” 0x0D ASCII character. The CR character cannot be contained in the middle.
- Messages cannot start with '$' or '#' because these are reserved for Service mode commands.
- Base station can receive host message only if Host Commands Obey/Ignore is set to Ignore (see page 46).
- Messages in response to a label read can be sent to the handheld only when Transmit Mode = ACK from Host (see transmit mode parameter). Messages not in response to a label read can be sent at any time in any Transmit Mode. These must start with the DC2 0x12 ASCII character.
- Messages can be sent to all handhelds linked to base by using a Multicast message: “00 00 00 00 2A AA”
- In order to receive a message, handhelds must not be in Battery Profile = Maximum Autonomy.
- If you want to control the reader's beeper from the host, you will also probably want to disable the good transmission beep that is emitted when the code is received from the base station. (See "Wireless Features" on page 294).
- The message field can store plain text and escape sequences. Escape sequences are interpreted as commands.

The format of the ACK from Host message is:

[Scanner_Addr] [Scanner_Addr_delimiter] MESSAGE <CR>

The format of a generic message From Host to handheld reader is:

[Scanner_Addr] [Scanner_Addr_delimiter] DC2 MESSAGE <CR>

where DC2 is ASCII 0x12 (^R) character.

[Items in square brackets are optional.]

CURSOR CONTROL

ESC SEQUENCE	ACTION
ESC [n A	Up n rows, no scroll
ESC [n B	Down **n** rows, no scroll
ESC [n C	Right **n** columns
ESC [n D	Left **n** columns
ESC [G	CR
ESC [r ; c H	Move to row r, column c (ESC[1;1H is the upper left character position of the display)
ESC D	Down 1 row, with scroll
ESC E	CR and cursor down 1 row with scroll
ESC M	Up 1 row and scroll

NOTE:

- **Since CR is used as the message terminator, you must use ESC [G or ESC E to print a CR.**
- **The cursor row position is not affected by the currently selected font. The display always has 6 rows, so when writing with the large font, actually three rows are written. You will need two ESC E commands to step from one row to the next when using the large font.**
- **The cursor column position is affected by the currently selected font. Therefore, column 6 is 36 pixels from the left border only if you last selected the 6x8 font; otherwise it could be 48 or 72 pixels from the left border.**

FONT SELECTION

ESC SEQUENCE	ACTION
ESC [0 m	Normal mode
ESC [7 m	Reverse mode
ESC # 4	Large font: subsequent characters are written on the current row and the row below it using the 12x16 font which allows for two rows of eight characters on the display.
ESC # 5	Normal font: subsequent characters are written using the 6x8 font, which allows for four rows of sixteen characters on the display.
ESC # 7	Medium font: subsequent characters are written using the 8x8 font, which allows for four rows of twelve characters on the display.

CLEARING DISPLAY

ESC SEQUENCE	ACTION
ESC [0 K	From cursor position to end of line inclusive
ESC [1 K	From beginning of line to cursor position (not inclusive)
ESC [2 K	Entire line
ESC [0 J	From cursor position to end of display inclusive
ESC [1 J	From beginning of display to cursor position (not inclusive)
ESC [2 J	Entire display; moves cursor to upper left corner on display

LED AND BEEPER CONTROL

The LED control escape sequences are intended to activate the LEDs for short periods of time and can be used in combination with the Beeper. The LED and Beeper will be controlled by the system after the entire command sequence is interpreted.

ESC SEQUENCE	ACTION
Esc [0 q	Emit short High tone + short delay
Esc [1 q	Emit short Low tone + short delay
Esc [2 q	Emit long Low tone + short delay
Esc [3 q	Emit good read tone
Esc [4 q	Emit bad tx tone
Esc [5 q	Wait 100 msec
Esc [6 q	Turn on the green LED
Esc [7 q	Turn off the green LED
Esc [8 q	Turn on the red LED
Esc [9 q	Turn off the red LED
Esc[0v	Execute vibration for 100 mSec

Example:

Esc [6 q Esc [3 q Esc [7 q	Turns on the green LED, emits a good read tone, and turns off the green LED.
Esc [6 q Esc [5 q Esc [7 q	Turns on the green LED for 100 msec and then turns off the green LED.

SETTING RTC

ESC SEQUENCE	ACTION
ESC [0 p d d m m y y	Set date to day, month, year
ESC [1 p h h m m	Set time to hours, minutes; seconds are automatically set to 00.

APPENDIX A
TECHNICAL SPECIFICATIONS

The table below contains Physical and Performance Characteristics, User Environment and Regulatory information. Table 37 provides Standard Cable Pinouts.

PD9600 TECHNICAL SPECIFICATIONS

Table 30 PD9600 Technical Specifications

PHYSICAL CHARACTERISTICS	
Color	Yellow/Black
Dimensions	Height 19.0 cm (7.5'') Length 14.0 cm (5.5”) Width 7.9 cm (3.1”)
Weight (without cable)	SR/HP/DC: Approx. 305 g (10.7 oz.) AR: 320 g (11.28 oz.) DPX: 316 g (11.1 oz.)
ELECTRICAL CHARACTERISTICS	
Input Voltage	5 - 30 VDC ± 5%
Current Consumption	**Operating (Typical)[a]:** SR: 200mA @ 5V; 120mA @ 12V HP/ DC: 280mA @ 5V / 140mA @ 12V AR: 410mA @5V /180 mA @12V DPX: 470mA @5V /190 mA @12V **Operating (Max[b]):** SR/HP/DC: 500mA @5V / 200mA @12V AR: 850mA @ 5V (550mA with Power Optimization enabled); 350mA @ 12V DPX: 1A @5V; 400mA @12V **Standby/Idle (Typical):** SR/HP/DC: 187mA @ 5V / 92mA @ 12V AR: 140mA @ 5V / 80mA @ 12V DPX: 89mA @ 5V / 41mA @ 12V
Reading Indicators	Top illumination, Good Read Spot[c], Beep, Vibration
Interfaces Supported	USB, RS-232, Ethernet

a. Mean value reading in 1 sec.
b. Peak consumption with 10% of tolerance
c. Not available for AR model.

OPTICAL CHARACTERISTICS	
Optical Format	1/4"
Imager Sensor	1280 H x 800 V
Illumination System	SR, DC, HP: White LED AR: 1 red LED (near field) + 1 red LED (far field) DPX: White, Red and Blue LED
Aiming System	SR, DC, HP: 630 - 680 nm VLD AR, DPX: 650nm VLD
Reading Angle	SR, DC, HP,DPX: Pitch: +/- 52°; Skew: +/- 52° AR: Pitch: +/- 60°; Skew: +/- 60°
Field of View	HP: 38° x 24° STD: 38° x 24° DC: 51° x 33.5° AR: Near field 34°H x 22°V Far field 12°H x 7.5°V DPX: 38° x 29°
Print Contrast Ratio	SR, HP, DC, DPX: minimum 15% AR: minimum 20%
ENVIRONMENTAL CHARACTERISTICS	
Operating Temperature	SR, DC, HP, DPX: -20° to 50° C (-4° to 122° F) AR: -30° to 50° C (-22° to 122° F)
Storage Temperature	-40° to 70° C (-40° to 158° F)
Humidity	0 to 95% non-condensing
Drop Resistance	Withstands 50 drops from 2.5 m/8.2 ft @20° C; Withstands 50 drops from 2.0 m/6.6 ft @-20° C
Ambient Light Immunity	100,000 Lux
Contaminants: Spray/rain, Dust/particulates	IP67 and IP65
ESD Protection	20 KV
Regulatory	See Regulatory Addendum

PD9630 DOF - DEPTH OF FIELD (TYPICAL)[A]	
Symbology	**DOF range**
Code 39	**AR:** 3 mils: 13-95 cm (5.1- 37.4in) 20 mils: up to 600 cm (up to 236.2in)
Code 128	**SR:** 5 mils: 6.4-30.9 cm (2.5-12.2 in) 20 mils: 4-103.7 cm (1.6-40.8 in) 40 mils: 5.5-175 cm (2.2-68.9 in) **DC:** 5 mils: 3.1-39.7 cm (1.2-15.6 in) 20 mils: 3.5-119.1 cm (1.3-46.9 in) 40 mils: 4.5-186.6 cm (1.7-73.4 in) **HP:** 2.5 mils: 6.3-11.5 cm (2.5-4.5 in) 5 mils: 3.8-41 cm (1.5-16.1 in) 20 mils: 4-157 cm (1.6-61.8 in) 40 mils: 5.5-242.9 cm (2.1-95.6 in) **AR:** 40 mils: up to 1000 cm (up to 393.7 in) 100 mils: up to 2000 cm (up to 787.4 in) **DPX:** 2.5 mils: 2.5-9.8 cm (1.0-3.9 in) 5 mils: 2.5-16.9 cm (1.0-6.7 in)
EAN13	**SR:** 13 mils: 4-67.5 cm (1.5-26.5 in) **DC:** 13 mils: 3.5-102 cm (1.3-40.1 in) **HP:** 13 mil: 4-120.2 cm (1.5-40.2 in) **AR:** 13 mils: up to 320 cm (up to 126 in) **DPX:** 13 mils: 2.5-22.5 cm (1.0-8.9 in)
PDF417	**HP:** 10 mils: 0.5-46.1 cm (0.2-18.1 in) **DPX:** 5 mils: 2.0-14.7 cm (0.8-5.8 in) 10 mils: 1.0-21.5 cm (0.4-8.5 in)
Datamatrix	**SR:** 10 mils: 6.4-30 cm (2.5-11.8 in) **DC:** 10 mils: 4.2-30.2 cm (1.6-11.8 in) **HP:** 4 mils: 6.5-9.3 cm (2.5-3.6 in) 10 mils: 4.2-32.1 cm (1.6-12.6 in) **AR:** 10 mils: up to 110 cm (up to 43.3 in) 55 mils: up to 650 cm (up to 255.9 in) 100 mils: up to 1000 cm (up to 393.7 in) **DPX:** 5 mils: 2.0-10.0 cm (0.8-3.9 in) 10 mils: 2.0-16.2 cm (0.8-6.4 in)

Max Resolution	**SR:** 1D = 3 mils, 2D = 6 mils **DC:** 1D = 3 mils, 2D = 5 mils **HP:** 1D = 2.5 mils, 2D = 4 mils **AR:** 1D = 2.5 mils, PDF = 3 mils, Datamatrix = 5 mils **DPX:** 1D = 2 mils, 2D = 4 mils

a. 13 mils DOF based on EAN. All other 1D codes are Code 39. All labels grade A, typical environmental light, 20°C, label inclination 10°. For AR model only: All labels grade A, ambient light level 200-300lux, pitch angle 10°, tilt angle 10°, skew angle 0°, room temperature 20°C.

PM/PBT9600 TECHNICAL SPECIFICATIONS

Table 31 PM9600 Technical Specifications

PHYSICAL CHARACTERISTICS	
Color	Yellow/Black
Dimensions	Height 19.0 cm (7.5'') Length 14.0 cm (5.5”) Width 7.9 cm (3.1”)
Weight	PM9600 w/o display: 425 g (14.9 oz.) PM9600 w/display: max 455 g (16 oz.) PM9600AR w/o display: 450 g (15.9 oz.) PM9600AR w/display: max 480 g (16.9 oz.) PM9600DPX: 463 g (16.3 oz.) PBT9600: 415 g (14.7 oz.) PBT9600AR: 450 g (15.9 oz.) PBT9600DPX: 435 g (15.3 oz.)
ELECTRICAL CHARACTERISTICS	
Battery Type	Li-ion battery pack
Time of Recharge typical @ 25°C ambient temperature[a]	
External Power	typ. 3h 15’ fast charge @ 12V typ. 2h 50’ fast charge @ 24V
Host Power USB	typ. 15h 15’
Host Power USB type C	typ. 6h
Interfaces Supported	USB, RS-232, Ethernet
Max. Scan Rate	50 frames/sec
Reading Indicators	Top and rear illumination, Good Read Spot[b], Beep, Vibrator
OPTICAL CHARACTERISTICS	
Optical Format	1/4"
Imager Sensor	1280 H x 800 V
Illumination System	SR, HP and DC: White LED AR: 1 red LED (near field) + 1 red LED (far field) DPX: White, Red and Blue LED
Aiming System	SR, HP and DC: 645 - 660 nm VLD AR, DPX: 650nm VLD
Reading Angle	SR, HP, DC, DPX: Pitch: +/- 52°; Skew: +/- 52° AR: Pitch: +/- 60°; Skew: +/- 60°
Field of View	HP: 38° x 24° SR: 38° x 24° DC: 51° x 33.5° AR: Near field 34°H x 22°V Far field 12°H x 7.5°V DPX: 38° x 29°

Print Contrast Ratio	SR, HP, DC, DPX: minimum 15% AR: minimum 20%
ENVIRONMENTAL CHARACTERISTICS	
Operating Temperature	-20° to 50° C (-4° to 122° F)
Recharging Temperature[a]	Recommended 0° to 35° C (32° to 95° F) Max allowed 0° to 40° C (32° to 104° F)
Storage Temperature	-40° to 70° C (-40° to 158° F)
Humidity	0 to 95% non-condensing
Drop Resistance	Withstands 50 drops from 2.4 m/8 ft @20° C; Withstands 50 drops from 2.0 m/6.6 ft @-20° C
Ambient Light Immunity	100,000 Lux
Water/Dust Protection Degree	IP67 and IP65
ESD Protection	20 KV **ESD: Opening the battery door allows access to electrostatic sensitive areas. In particular, when connecting and using the micro-USB cable, it is recommended to operate in an environment with low levels of electrostatic charge (e.g. office) and avoiding the introduction of fingers or objects into the battery compartment.**

a. The higher the ambient temperature, the longer the charging time.
b. Not available on AR models.

RADIO CHARACTERISTICS			
	Star 433 models	**Star 910 models**	**BT models**
Frequency working center	433MHZ	910MHZ	2400 to 2483.5 MHz
Programmable Speed	19.2 kb/s 500 kb/s (default)	36.8 kb/s 500 kb/s (default)	
Typical Range (in open air)	100 m (at 500 kb/s) 150 m (at 19.2 kb/s)	180 m (at 500 kb/s) 230 m (at 36.8 kb/s, frequency hopping) 80 m (at 36.8 kb/s, fixed channel)	100 m
Max number of devices per base station	16		7

NOTE: A radio coverage reduction is expected when the base station is charging a gun.

PM/PBT9600 DOF - DEPTH OF FIELD (TYPICAL)[A]	
Symbology	**DOF range**
Code 39	**AR:** 3 mils: 13-95 cm (5.1-37.4 in) 20 mils: up to 600 cm (up to 236.2 in)
Code 128	**SR:** 5 mils: 6.4-30.9 cm (2.5-12.2 in) 20 mils: 4-103.7 cm (1.6-40.8 in) 40 mils: 5.5-175 cm (2.2-68.9 in) **HP:** 2.5 mils: 6.3-11.5 cm (2.5-4.5 in) 5 mils: 3.8-41 cm (1.5-16.1 in) 20 mils: 4-157 cm (1.6-61.8 in) 40 mils: 5.5-242.9 cm (2.1-95.6 in) **AR:** 40 mils: up to 1000 cm (up to 393.7 in) 100 mils: up to 2000 cm (up to 787.4 in) **DPX:** 2.5 mils: 2.5-9.8 cm (1.0-3.9 in) 5 mils: 2.5-16.9 cm (1.0-6.7 in)
EAN13	**SR:** 13 mils: 4-67.5 cm (1.5-26.5 in) **HP:** 13 mil: 4-120.2 cm (1.5-40.2 in) **AR:** 13 mils: up to 320 cm (up to 126 in) **DPX:** 13 mils: 2.5-22.5 cm (1.0-8.9 in)
PDF417	**HP:** 10 mils: 0.5-46.1 cm (0.2-18.1 in) **DPX:** 5 mils: 2.0-14.7 cm (0.8-5.8 in) 10 mils: 1.0-21.5 cm (0.4-8.5 in)
Datamatrix	**SR:** 10 mils: 6.4-30 cm (2.5-3.9 in) **HP:** 4 mils: 6.5-9.3 cm (2.5-3.6 in) 10 mils: 4.2-32.1 cm (1.6-12.6 in) **AR:** 10 mils: up to 110 cm (up to 43.3 in) 55 mils: up to 650 cm (up to 255.9 in) 100 mils: up to 1000 cm (up to 393.7 in) **DPX:** 5 mils: 2.0-10.0 cm (0.8-3.9 in) 10 mils: 2.0-16.2 cm (0.8-6.4 in)

Max Resolution[b]	**SR:** 1D = 3 mils, 2D = 6 mils **HP:** 1D = 2.5 mils, 2D = 4 mils **AR:** 1D = 2.5 mils, PDF=3mils, Datamatrix = 5 mils **DPX:** 1D = 2 mils, 2D = 4 mils

a. All labels grade A, typical environmental light, 20°C, label inclination 10°. For AR model only: All labels grade A, ambient light level 200-300lux, pitch angle 10°, tilt angle 10° skew angle 0°, room temperature 20°C
b. 1D codes are Code 39 and 2D codes are Data Matrix

DECODING CAPABILITIES

PD9600/PM9600/PBT9600 DECODING CAPABILITY
1D Bar Codes GS1 Databar linear codes, UPC/EAN (A,E,13,8), including P2/P5 Addons, ISBN, ISSN, Code128, EAN128, ISBT128, Code39, Code39 Full ASCII, Code39 CIP, Code 32, Trioptic, Interleaved 2 of 5, IATA, Industrial 2 of 5, Standard 2 of 5, matrix2 of 5, datalogic 2 of 5, follet 2 of 5, Codabar, Code11, MSI, Plessey, Code 93, Pharmacode, BC412
2D / Stacked Codes DataMatrix (square, rectangular), MaxiCode, QR Codes, (QR, Micro QR and Multiple QR codes), Aztec Postal codes including: Australian Post, China Post, Japanese Post, KIX Post, Planet Code, Postnet, Royal Mail Code(RM45CC), IMB, Sweden Post,Portugal Post, LaPoste A/R 39 Stacked codes including EAN/JAN Composites, GS1 Databar Composites, GS1 Databar Expanded Stacked; GS1 DataBar Stacked; GS1 DataBar Stacked Omnidirectional, PDF417, Macro PDF, Micro PDF417, China sensible, DotCode
Other OCR, Digimarc[a]

a. Not available for AR and DPX models.

BC9600 TECHNICAL SPECIFICATIONS

Table 32 BC9600 Technical Specifications

PHYSICAL CHARACTERISTICS	
Color	Black
Dimensions	Height 9.8 cm (3.9'') Length 24.3 cm (9.6'') Width 10.2 cm (4'')
ELECTRICAL CHARACTERISTICS	
Supply Voltage	BC9620: Host power 5-12VDC +/-5% External power 12 VDC +/-5% BC9630: Host power 5VDC +/-5%(*) or 10-30 VDC +/-5% External power 10-30 VDC +/-5% BC9631: Host power 5VDC +/-5%[a] or 10-30 VDC +/-5% BC9680: 10-30 VDC +/-5% BC9681: External power 10-30 VDC +/-5% or POE Injector IEEE 802.3af™ (or superior) compliant.
Power Consumption	max. 1.5 A (charging) max. 500 mA @5 V (charging)
Indicators	Power/Data green LED Reader battery state green/orange fading
Time of Recharge typical @ 25°C ambient temperature	
External Power	typ. 3h 15' fast charge @ 12V typ. 2h 50' fast charge @ 24V
Host Power USB	typ. 15h 15'
Host Power USB type C	typ. 6h

a. with approved interface cables

ENVIRONMENTAL CHARACTERISTICS	
Working Temperature	**Radio:** -20° to +50 °C / -4 to +122 °F **Battery charging:** 0 to 40°C nominal (+32° to +104 °F) 0 to 35°C ideal (+32° to +95 °F)
Storage Temperature	-40° to +70 °C / -40 to +158 °F
Humidity	90% non condensing
Protection Class	BC9620, BC9630, BC9680: IP40 - BC9631, BC9681: IP65

RADIO CHARACTERISTICS			BT
Frequency working center	433MHZ	910MHZ	2400 to 2483.5 MHz
Programmable Speed	19.2 kb/s 500 kb/s (default)	36.8 kb/s 500 kb/s (default)	
Typical Range (in open air)	100 m (at 500 kb/s) 150 m (at 19.2 kb/s)	180 m (at 500 kb/s) 230 m (at 36.8 kb/s, frequency hopping) 80 m (at 36.8 kb/s, fixed channel)	100 m

Max number of devices per base station	16	7

LED AND BEEPER INDICATIONS

The reader's beeper sounds and its LED illuminates to indicate various functions or errors on the reader. An optional "Green Spot" also performs useful functions (not available in AR model). The following tables list these indications. One exception to the behaviors listed in the tables is that the reader's functions are programmable, and so may or may not be turned on. For example, certain indications such as the power-up beep can be disabled using programming bar code labels.

Table 33LED and Beeper Indications

INDICATION	LED	BEEPER
Power-up	Upper LED flashes/blinks on power-up, however, this may be too rapid to view. With a USB interface, the LED blinks until enumeration with the host is completed.	Reader beeps four times at highest frequency and volume upon power-up.
Good Read	LED behavior for this indication is configurable via the feature "Good Read: When to Indicate". The Green spot turns on for a configurable time. Not available in AR model.	The reader will beep once at current frequency, volume, mono/bi-tonal setting and duration upon a successful label scan.
ROM Failure	Flashes	Reader sounds 4 long beeps.
Limited Scanning Label Read	N/A	Reader 'chirps' six times at the highest frequency and current volume.
Reader Disabled	The LED blinks continuously 100mS on / 900mS off	N/A
Image Capture	Blue light	N/A
Double TAP	The scanner turns on the LED for a few seconds indicating the state of the battery. Green: completely charged. Orange: half charge. Red: low battery.	N/A

USER INDICATIONS FOR PD9600

Table 34 User Indications for PD9600

STATUS	3GL AND GOOD READ LED	BUZZER
Power-up	OFF	Rising Beeps' Sequence
USB Enumeration Phase	250 msec[a] ON ↔ 250 msec OFF	OFF
USB Suspend	Depends on Power Cable and specific configurations	OFF
Idle	OFF	OFF
While Reading	OFF	OFF
Decode Done	Solid ON Programmable Duration (1 s default)	Single Beep
Reader Disabled (POS) Communication with host not established	100 msec ON ↔ 900 msec OFF	OFF
Firmware Upgrade	250 msec ON ↔ 250 msec OFF	OFF

STATUS	3GL AND GOOD READ LED	BUZZER
Host Download	250 msec ON ↔ 250 msec OFF	OFF
Enter Service Mode	No Effect	Beeps' Sequence
Label Programming	No Effect	Beep

a. "msec" stands for milliseconds, equivalent to 1/1000th of a second

USER INDICATIONS FOR PBT/PM9600 (GUN ONLY)

Table 35 User Indications for PBT/PM9600 Gun

STATUS	3GL AND GOOD READ LED	BATTERY LED	BUZZER
Power-up	OFF	OFF	Rising Beeps' Sequence
USB Enumeration Phase	250 msec[a] ON ↔ 250 msec OFF	OFF	OFF
USB Suspend	Depends on Power Cable and specific configurations	OFF	OFF
Idle	OFF	OFF	OFF
While Reading	OFF	OFF	OFF
Decode Done	Solid ON Programmable Duration (1 s default)	OFF	Single Beep
Reader Disabled (POS) Communication with host not established	100 msec ON ↔ 900 msec OFF	OFF	OFF
Firmware Upgrade	250 msec ON ↔ 250 msec OFF	OFF	OFF
Host Download	250 msec ON ↔ 250 msec OFF	OFF	OFF
Paging Answer	5 cycles: 100 msec ON ↔ 900 msec OFF	OFF	5 Beeps (when LED ON)
Enter Service Mode	No Effect	OFF	Beeps' Sequence
Label Programming	No Effect	OFF	Beep
ACK Received on Transmission	OFF	OFF	SingleProgrammable Beep (OFF by default)
ACK NOT Received on Transmission	OFF	OFF	Wrong Beep
base station in USB Suspend	Depends on Power Cable and specific configurations	OFF	OFF
Configuration Alignment	250 msec ON ↔ 250 msec OFF	OFF	OFF
Charge in Progress through micro-USB[b]	OFF	Blinking: 1 s ON. 1 s OFF Green (charge = 50% - 99%) Amber (charge = 1% - 49%) Red (charge less than 1%) Reader is unusable until 1% is reached	OFF

STATUS	3GL AND GOOD READ LED	BATTERY LED	BUZZER
Charge Complete through micro-USB	OFF	Solid Green It goes OFF when unplugged	OFF
Charge Fault	OFF	OFF	OFF
Charge in Progress through base station	OFF	OFF	OFF
Charge Complete through base station	OFF	OFF	OFF
Battery Status indications when not charging, using double tap	OFF	Solid with programmable duration (3 s default) and then OFF Green (charge = 50% - 100%) Amber (charge = 2% - 50%) Red forced loop (charge less than 2%)	OFF

a. “msec” stands for milliseconds, equivalent to 1/1000th of a second
b. In case of heavily depleted battery (e.g. if the reader has not been used for a long time), the reader being charged will not be operational for a certain amount of time, which can vary from just a few minutes to 30-40 minutes depending on battery discharge level and power supplied to the base station (i.e. longer time if the base station is connected to USB only without external power supply).

USER INDICATIONS FOR BC9600 BASE STATIONS

Table 36 User Indications for BC9600 Base Stations

STATUS	TRANSMISSION LEDS	CHARGING LEDS
Power-up	Solid ON	OFF
USB Enumeration	250 msec[a] ON ↔ 250 msec OFF	OFF
USB Suspend	Depends on Power Cable and specific configurations	OFF
Idle	Solid ON	OFF
While Reading	Solid ON	OFF
Label Transmitted to Host	OFF for 100 msec and then Solid ON	OFF
Reader Disabled (POS) Communication with host not established	100 msec ON ↔ 900 msec OFF	OFF
Firmware Upgrade	250 msec ON ↔ 250 msec OFF	OFF
Host Download	250 msec ON ↔ 250 msec OFF	OFF
Configuration Alignment	250 msec ON ↔ 250 msec OFF	OFF
Enter Service Mode	No Effect (remains Solid ON)	OFF
Short button press (1-5 s) Paging request	Blink Green 500 msec ON ↔ 500 msec OFF (for 5 s while pressing button)	OFF
Long button press (6-10 s) Flush Piconet request	Blink Green 1 s ON ↔ 1 s OFF (for 5 s while pressing button)	OFF
Charge in Progress	No Effect	Fading: 1 s ON ↔ 1 s OFF Green (charge = 50% - 99%) Amber (charge = 0% - 49%)
Charge Complete	No Effect	Solid Green It goes OFF when unplugged
Charge Fault	No Effect	OFF
Electrical Fault	OFF	OFF

a. “msec” stands for milliseconds, equivalent to 1/1000th of a second

PROGRAMMING MODE

The following indications ONLY occur when the reader is in Programming Mode.

INDICATION	DESCRIPTION	LED	BEEPER
Enter Programming Mode	A valid programming label has been scanned.	LED blinks continuously	Reader sounds four low frequency beeps.
Rejection of Label	Label has been rejected.	N/A	Reader sounds three times at lowest frequency & current volume.
Acceptance of Partial Label	In cases where multiple labels must be scanned to program one feature, this indication acknowledges each portion as it is successfully scanned.	N/A	Reader sounds one short beep at highest frequency & current volume.
Acceptance of Programming	Configuration option(s) have been successfully programmed via labels and the reader has exited Programming Mode.	N/A	Reader sounds one high frequency beep and four low frequency beeps followed by reset beeps.
Cancel Item Entry	Cancel label has been scanned.	N/A	Reader sounds twice at low frequency & current volume.

TROUBLESHOOTING

PROBLEM	POSSIBLE CAUSE	POSSIBLE SOLUTION
Nothing happens when the scan button is pulled.	No power to the reader	Check system power. Ensure power supply is connected.
	Interface or power cables are loose.	Ensure all cable connections are secure.
LED comes on but bar code does not decode.	Reader not programmed for correct bar code type.	Ensure reader is programmed to read the type of bar code scanned.
	Bar code label is unreadable.	Check the label to ensure it is not defaced. Try scanning another bar code type.
	Distance between reader and bar code is incorrect.	Move reader closer to or further from the bar code.
Bar code is decoded but not transmitted to the host.	Reader not programmed for the correct host type.	Scan the appropriate host type bar code.

Figure 17 and Table 37 provide standard pinout information for the reader's cable.

Figure 17 Standard Cable Pinouts

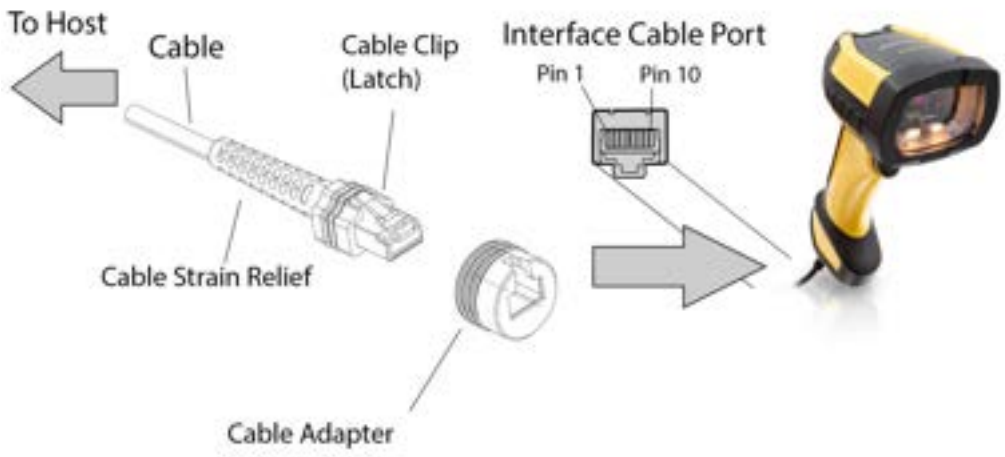

The signal descriptions in Table 37 apply to the connector on the reader and are for reference only.

Table 37 Standard Cable Pinouts — Reader Side

PIN	RS232	USB
1	RTS (out)	
2		D+
3		D-
4	GND	GND
5	RX	
6	TX	
7	VCC	VCC
8		
9		
10	CTS (in)	

APPENDIX B
MAINTENANCE

CLEANING PROCEDURE

Proper cleaning is needed on the external plastic surfaces and output window to guarantee reliable scanning and charging of the battery.

A regular cleaning routine will remove the dust and dirt that may accumulate on the product over time. The maintenance activity may be repeated more frequently depending on the severity of the environment in which the scanner is used.

A periodic deeper cleaning is suggested once per month.

Cleaning Plastic Surfaces

Exterior surfaces and scan windows exposed to spills, smudges or debris accumulation require periodic cleaning to ensure best performance during scanning operations. Follow the procedures described in this instruction sheet to keep your PowerScan™ device in good operating condition.

WARNING: Be sure to turn off power and unplug the device from electrical outlet before cleaning.

CAUTION: DO NOT use abrasive pads or cleaning agents.

Common Cleaning Solutions

The cleaners and disinfectants (or their equivalent) listed below have been tested for use on the PowerScan™ 9600:

PRODUCTS	CHEMICAL CONTENT
Alcohol Wipes	70% Isopropyl Alcohol
Formula 409® Glass and Surface Cleaner	n-Alkyl Dimethyl Benzyl Ammonium Chloride; n-Propoxypropanol
Windex® Multisurface	2-Hexoxyethanol, Butoxypropanol
Clorox® Bleach; Clorox Healthcare Bleach Germicidal Cleaner	Diluted to reach max 0.8% of concentration Sodium Hypochlorite; Sodium Hydroxide
Hydrogen Peroxide	3%
100% Gentle dish soap and water	

NOTE: Disinfectants may be harsh on metal. They are recommended for use only on enclosures.

CAUTION: DO NOT spray or pour cleaner directly onto the unit.

DO NOT use solutions in their concentrated form.

DO NOT use aerosols, solvents or abrasives.

DO NOT use paper towels or rough cloths to clean windows.

NOTE: The PowerScan™ 9600 is tolerant to occasional contact to the following industrial fluids:

- **Brake fluid (DOT3)**
- **Carburetor Cleaner (STP)**
- **Gasoline**
- **Motor oil (SAE30)**
- **Automatic Transmission Fluid (ATF)**

Cleaning Enclosure and Window Surface

- Moisten a soft cloth with a recommended cleaning solution. Be sure to apply the solution to your cloth first. Wring excessive liquid from the cloth.
- Use the cloth to wipe down the surface of the unit. Use cotton swabs, lightly moistened, to reach in corners and crevices.
- Use another clean dry cloth to remove any residue of the cleaning agent and ensure the unit is dry.

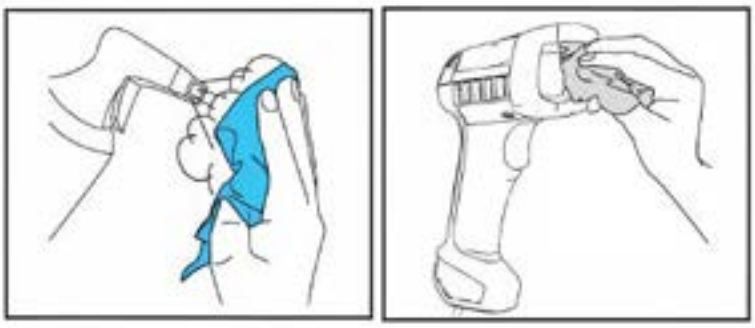

APPENDIX C
STANDARD DEFAULTS

The most common configuration settings are listed in the “Default” column of the table below. Page references are also provided for feature descriptions and programming bar codes for each parameter. A column has also been provided for recording of your preferred default settings for these same configurable features.

Table 38 Standard Defaults

PARAMETERS	DEFAULT	YOUR SETTING	PAGE NUMBER
GLOBAL INTERFACE FEATURES			
Host Commands — Obey/Ignore	Obey		46
USB Suspend Mode	Enable		46
RS-232 ONLY			
Baud Rate	115,200		48
Data Bits	8 Data Bits		49
Stop Bits	1 Stop Bit		50
Parity	None		51
Handshaking Control	RTS		52
RS-232/USB-COM			
Intercharacter Delay	No Delay		54
Beep On ASCII BEL	Disable		55
Beep On Not on File	Enable		55
ACK NAK Options	Disable		56
ACK Character	‘ACK’		57
NAK Character	‘NAK’		57
ACK NAK Timeout Value	200 msec		58
ACK NAK Retry Count	3 Retries		57
ACK NAK Error Handling	Ignore Errors Detected		59

PARAMETERS	DEFAULT	YOUR SETTING	PAGE NUMBER
Indicate Transmission Failure	Enable		59
Disable Character	'D'		60
Enable Character	'E'		60
KEYBOARD			
Setting Country Mode	U.S. Keyboard		63
Encoding Type	Don't Use Encoding		77
ALT Output Type	ALT Unicode		84
Keyboard Numeric Keypad	Standard Keys		85
Keyboard Send Control Characters	Send Ctrl+Key		85
Intercode Delay	00 = No Intercode Delay		86
USB Keyboard Speed	1ms		87
USB OEM			
USB-OEM Device Usage	Handheld		89
ETHERNET			
DHCP	Disable		91
Static IP Address	192.168.187.031		91
Subnet Mask	192.168.187.31		92
Gateway Address	192.168.187.254		92
DNS1 Address	0.0.0.0		93
DNS2 Address	0.0.0.0		93
Device Name	ASCII "CM96x"		94
Data Socket Port	51000		94
Aladdin Socket Port	59180		95
Image Socket Port	53000		95
LOGGER Socket Port	52000		96
DATA Flow Control Selection	Flow Control Disable		96
DATA Prefix Counter Selection	Disable		97
AIDA LED mode	Enable		97
Scanner Character Terminator	0D00...		98
Controller Input Data Buffer Size	128 byte		99

PARAMETERS	DEFAULT	YOUR SETTING	PAGE NUMBER
Controller Output Data Buffer Size	16 byte		100
DATA FORMAT			
Global Prefix/Suffix	No Global Prefix Global Suffix = 0x0D (CR)		104
Case Conversion	Disable (no case conversion)		105
Character Conversion	0xFFFFFFFFFFFFFFFF (no character conversion)		105
Global AIM ID	Disable		106
GS1-128 AIM ID	Enable		106
Label ID: Pre-loaded Sets	USA Set		107
Label ID Control	Disable		108
Label ID Symbology Selection			109
POWER OPTIMIZATION			
Power Optimization	Performance		115
READING PARAMETERS			
Scan Mode	Trigger Single		117
Scanning Active Time	5 seconds		118
Flash On Time	10 = Flash is ON for 1 second		118
Flash Off Time	06 = Flash is OFF for 600ms		119
Double Read Timeout	0.6 second		119
Stand Detection Behavior (Desk only)	Ignore Autorecognition		121
Stand Mode/Object Detection Indication (Stand Mode Flash)	Disable		122
Stand Mode/Object Detection Sensitivity	Medium		122
Stand Mode/Object Detection Illumination Off Time	1 second		123
Corded Stand Mode	Disable		123
Dock Detection Beep	Disable		124
Power On Alert	Power-up Beep		125
Good Read Beep Type	Mono		125
Good Read Beep Frequency	Medium		126
Good Read Beep Length	80 msec		127

PARAMETERS	DEFAULT	YOUR SETTING	PAGE NUMBER
Good Read Beeper Volume / Vibration	High		128
Vibration Feedback for Good Read	Enable		128
RGB Good Read Enable	Enable		129
RGB Good Read Color	GREEN		129
Good Read LED Duration	300 msec		130
Good Read: When to Indicate	After Decode		131
Green Spot Duration	Short (300 msec)		131
Aiming Pointer	Enable		132
Pick Mode	Disable		132
Illumination Power Level (only for STD, HP, DC models)	100%		133
Mobile Phone Mode	Enable		133
Multiple Labels Ordering by Code Symbology	Random Order		134
Multiple Labels Ordering by Code Length	Disable		134
Set DPM Strategy	Auto		135
MOTION FEATURES			
Motionless Timeout	2 seconds		138
Motion Sensitivity	Medium		138
Motion Aiming Control	Enable		139
CODE SELECTION - 1D SYMBOLOGIE			
1D Normal/Inverse Symbol Control	Allow only Normal 1D Barcode		142
Code EAN/UPC			
Coupon Control	Enable only UPC/EAN		143
UPC-A			
UPC-A Enable/Disable	Enable		144
UPC-A Check Character Transmission	Send		144
Expand UPC-A to EAN-13	Don't expand		145
UPC-A Number System Character Transmission	Transmit		145
UPC-E			

PARAMETERS	DEFAULT	YOUR SETTING	PAGE NUMBER
UPC-E Enable/Disable	Enable		146
UPC-E Check Character Transmission	Send		146
Expand UPC-E to EAN-13	Don't expand		147
Expand UPC-E to UPC-A	Don't expand		147
UPC-E Number System Character Transmission	Transmit		148
GTIN			
GTIN Formatting	Disable		148
EAN 13 (Jan 13)			
EAN-13 Enable/Disable	Enable		149
EAN-13 Check Character Transmission	Send		149
EAN-13 Flag 1 Character	Transmit		150
EAN-13 to ISBN Conversion	Disable		150
ISSN			
EAN-13 to ISSN Conversion	Disable		151
EAN 8			
EAN-8 Enable/Disable	Enable		152
EAN-8 Check Character Transmission	Send		152
Expand EAN-8 to EAN-13	Don't Expand		153
UPC/EAN Global Settings			
UPC/EAN Price Weight Check	Disable		154
UPC/EAN Quiet Zones	Five Modules		155
ADD-ONS			
Optional Add-ons	Disable P2 and P5		156
Optional Add-On Timer	70 msec		157
GS1 DATABAR™ OMNIDIRECTIONAL			
GS1 DataBar Omnidirectional Enable/Disable	Disable		158
GS1 DataBar Omnidirectional to GS1-128 Emulation	Disable		158

PARAMETERS	DEFAULT	YOUR SETTING	PAGE NUMBER
GS1 DataBar Expanded Enable/Disable	Disable		159
GS1 DataBar Expanded to GS1-128 Emulation	Disable		159
GS1 DataBar Expanded Length Control	Variable		160
GS1 DataBar Expanded Set Length 1	1		160
GS1 DataBar Expanded Set Length 2	74		161
GS1 DATABAR™ LIMITED			
GS1 DataBar Limited Enable/Disable	Disable		162
GS1 DataBar Limited to GS1-128 Emulation	Disable		162
CODE 39			
Code 39 Enable/Disable	Enable		163
Code 39 Check Character Calculation	Don't calculate		163
Code 39 Check Character Transmission	Send		164
Code 39 Start/Stop Character Transmission	Don't transmit		164
Code 39 Full ASCII	Disable		165
Code 39 Quiet Zones	Small Quiet Zones on two sides		165
Code 39 Length Control	Variable		166
Code 39 Set Length 1	02		166
Code 39 Set Length 2	50		167
TRIOPTIC CODE			
Trioptic Code Enable/Disable	Disable		168
CODE 39 DANISH PPT			
Code 39 Danish PPT Enable/Disable	Disable		168
CODE 39 PZN			
Code 39 PZN Enable/Disable	Disable		169
CODE 39 LA POSTE			
Code 39 La Poste Enable/Disable	Disable		169
CODE 32 (Italian Pharmaceutical Code)			
Code 32 Enable/Disable	Disable		170

PARAMETERS	DEFAULT	YOUR SETTING	PAGE NUMBER
Code 32 Check Character Transmission	Don't Send		170
Code 32 Start/Stop Character Transmission	Don't Transmit		171
Code 39 CIP HR (French Pharmaceutical Code)			
Code 39 CIP HR Enable/Disable	Disable		171
SPECIAL CODES			
Code 128			
Code 128 Enable/Disable	Enable		172
Expand Code 128 to Code 39	Don't Expand		172
Code 128 Check Character Transmission	Don't Send		173
Code 128 Function Character Transmission	Don't Send		173
Code 128 Quiet Zones	Auto		174
Code 128 Length Control	Variable		174
Code 128 Set Length 1	1		175
Code 128 Set Length 2	80		175
GS1-128			
GS1-128 Enable	Transmit in Code 128 Data Format		176
INTERLEAVED 2 of 5			
I 2 of 5 Enable/Disable	Disable		177
I 2 of 5 Check Character Calculation	Disable		177
I 2 of 5 Check Character Transmission	Send		178
I 2 of 5 Length Control	Variable		179
I 2 of 5 Set Length 1	6		179
I 2 of 5 Set Length 2	50		180
INTERLEAVED 2 of 5, FEBRABAN FORMAT (Desk Models Only)			
Interleaved 2 of 5, Febraban format Enable / Disable	Disable		181
INTERLEAVED 2 of 5 CIP HR			
Interleaved 2 of 5 CIP HR Enable/ Disable	Disable		181

PARAMETERS	DEFAULT	YOUR SETTING	PAGE NUMBER
MATRIX 2 of 5			
Matrix 2 of 5 Enable/Disable	Disable		182
Matrix 2 of 5 Check Character Calculation	Disable		182
Matrix 2 of 5 Check Character Transmission	Send		183
Matrix 2 of 5 Length Control	Variable Length		183
Matrix 2 of 5 Set Length 1	01 characters		184
Matrix 2 of 5 Set Length 2	50 characters		184
STANDARD 2 of 5			
Standard 2 of 5 Enable/Disable	Disable		185
Standard 2 of 5 Check Character Calculation	Disable		185
Standard 2 of 5 Check Character Transmission	Send		186
Standard 2 of 5 Length Control	Variable Length		186
Standard 2 of 5 Set Length 1	08 (8 characters)		187
Standard 2 of 5 Set Length 2	50 (50 characters)		187
COMPRESSED 2 of 5			
Compressed 2 of 5 Enable/Disable	Disable		188
Compressed 2 of 5 Check Character Calculation	Disable		188
Compressed 2 of 5 Check Character Transmission	Send		189
Compressed 2 of 5 Length Control	Variable Length		189
Compressed 2 of 5 Set Length 1	1 character		190
Compressed 2 of 5 Set Length 2	50 characters		190
DATALOGIC 2 OF 5			
Datalogic 2 of 5 Enable/Disable	Disable		191
Datalogic 2 of 5 Check Character Calculation	Disable		191
Datalogic 2 of 5 Check Character Transmission	Send		192
Datalogic 2 of 5 Length Control	Variable Length		192

PARAMETERS	DEFAULT	YOUR SETTING	PAGE NUMBER
Datalogic 2 of 5 Set Length 1	6 characters		193
Datalogic 2 of 5 Set Length 2	50 characters		193
INDUSTRIAL 2 of 5			
Industrial 2 of 5 Enable/Disable	Disable		194
Industrial 2 of 5 Check Character Calculation	Disable		194
Industrial 2 of 5 Check Character Transmission	Send		195
Industrial 2 of 5 Length Control	Variable		195
Industrial 2 of 5 Set Length 1	6 characters		196
Industrial 2 of 5 Set Length 2	50 characters		196
CODE IATA			
IATA Enable/Disable	Disable		197
IATA Check Character Transmission	Send		197
FOLLET 2 OF 5			
Follett 2 of 5 Enable/Disable	Disable		198
CODABAR			
Codabar Enable/Disable	Disable		199
Codabar Check Character Calculation	Disable		199
Codabar Check Character Transmission	Send		200
Codabar Start/Stop Character Transmission	Transmit		200
Codabar Start/Stop Character Set	abcd/abcd		201
Codabar Start/Stop Character Match	Don't Require Match		201
Codabar Quiet Zones	Quiet Zones on two sides		202
Codabar Length Control	Variable		203
Codabar Set Length 1	3 characters		203
Codabar Set Length 2	50 characters		204
ABC CODABAR			
ABC Codabar Enable/Disable	Disable		205
ABC Codabar Concatenation Mode	Static		205

PARAMETERS	DEFAULT	YOUR SETTING	PAGE NUMBER
ABC Codabar Dynamic Concatenation Timeout	200 msec		206
ABC Codabar Force Concatenation	Disable		206
ISBT-128			
ISBT 128 Concatenation	Disable		207
ISBT 128 Concatenation Mode	Static		207
ISBT 128 Dynamic Concatenation Timeout	200 msec		208
ISBT 128 Force Concatenation	Disable		209
ISBT 128 Advanced Concatenation Options	Disable		209
CODE 11			
Code 11 Enable/Disable	Disable		210
Code 11 Check Character Calculation	Check C and K		210
Code 11 Check Character Transmission	Send		211
Code 11 Length Control	Variable		211
Code 11 Set Length 1	4 characters		212
Code 11 Set Length 2	50 characters		212
CODE 93			
Code 93 Enable/Disable	Disable		213
Code 93 Check Character Calculation	Calculate Check C and K		213
Code 93 Check Character Transmission	Don't send		214
Code 93 Length Control	Variable		214
Code 93 Set Length 1	1 character		215
Code 93 Set Length 2	50 characters		215
Code 93 Quiet Zones	Auto		216
MSI			
MSI Enable/Disable	Disable		217
MSI Check Character Calculation	Calculate Mod 10		217
MSI Check Character Transmission	Send		218
MSI Length Control	Variable		218

PARAMETERS	DEFAULT	YOUR SETTING	PAGE NUMBER
MSI Set Length 1	1 character		219
MSI Set Length 2	50 characters		219
PLESSEY			
Plessey Enable/Disable	Disable		223
Plessey Check Character Calculation	Plessey std check char. verification		223
Plessey Check Character Transmission	Send		224
Plessey Length Control	Variable		224
Plessey Set Length 1	1 character		225
Plessey Set Length 2	50 characters		225
BC412			
BC412 Enable/Disable	Disable		226
BC412 Check Character Calculation	Calculate		226
BC412 Length Control	Variable		227
BC412 Set Length 1	1 character		227
BC412 Set Length 2	50 characters		228
CODE SELECTION - 2D SYMBOLOGIES			
2D Maximum Decoding Time	Normal		231
2D Structured Append	Disable		232
2D Normal/Inverse Symbol Control	Both Normal and Inverse		232
Decoding Normal/Mirrored Labels	Normal		233
AZTEC CODE			
Aztec Code Enable / Disable	Enable		234
Aztec Code Length Control	Variable		234
Aztec Code Set Length 1	1 character		232
Aztec Code Set Length 2	3,832 characters		235
CHINA SENSIBLE CODE			
China Sensible Code Enable / Disable	Disable		236
China Sensible Code Length Control	Variable		236
China Sensible Code Set Length 1	1 character		237
China Sensible Code Set Length 2	7,827 characters		237

PARAMETERS	DEFAULT	YOUR SETTING	PAGE NUMBER
DATA MATRIX			
Data Matrix Enable / Disable	Enable		238
Data Matrix Square/Rectangular Style	Both Square and Rectangular Style		238
Data Matrix Length Control	Variable		239
Data Matrix Set Length 1	1 character		239
Data Matrix Set Length 2	3,116 characters		240
GS1 DOTCODE			
DotCode Enable	Disable		241
DotCode High Resolution Enable	Enable		241
DotCode Position-based Decoding	Disable		242
MAXICODE			
Maxicode Enable / Disable	Disable		243
Maxicode Primary Message Trans-mission	Disable		243
Maxicode Length Control	Variable		244
Maxicode Set Length 1	1 character		244
Maxicode Set Length 2	0145 characters		245
PDF417			
PDF417 Enable / Disable	Enable		246
PDF417 Length Control	Variable		246
PDF417 Set Length 1	1 character		247
PDF417 Set Length 2	2,710 characters		247
MICRO PDF417			
Micro PDF417 Enable / Disable	Enable		248
Micro PDF417 Code 128 GS1-128 Emulation	Micro PDF AIM ID and label type		248
Micro PDF417 Length Control	Variable		249
Micro PDF417 Set Length 1	1 character		249
Micro PDF417 Set Length 2	0366 characters		250
QR CODE			
QR Code Enable / Disable	Enable		251

PARAMETERS	DEFAULT	YOUR SETTING	PAGE NUMBER
QR Code Length Control	Variable		251
QR Code Set Length 1	1 character		252
QR Code Set Length 2	7,089 characters		252
MICRO QR CODE			
Micro QR Code Enable / Disable	Disable		253
Micro QR Code Length Control	Variable		253
Micro QR Code Set Length 1	1 character		254
Micro QR Code Set Length 2	0035 characters		254
UCC COMPOSITE			
UCC Optional Composite Timer	70 msec		255
Postal Code Selection	Disable All Postal Codes		256
Postnet BB Control	Disable		257
DIGIMARC			
Digimarc	Disable		258
Set Digimarc Scale Parameter	003		258
OCR DECODING			
OCR Decoding Predefined Templates	Disable OCR Function		260
DISPLAY AND KEYBOARD FEATURES			
Display Operating Mode	Local Echo Mode		262
Display Off Timeout	8 second delay		262
Backlight Enable	Disable		263
Font Size	Small		263
Show no printable characters	ASCII under 0x20 are ignored		264
Set the Display Append State for Host Message	Disable the Append State		264
Key Programming	All keys enabled		266
Arrow Keys Mode (4-key models only)	String Association Mode		267
Arrow Up String (4-key models only)	-		267
Arrow Down String (4-key models only)	-		268
Legend for Arrow UP (4-key models only)	3D00		268

PARAMETERS	DEFAULT	YOUR SETTING	PAGE NUMBER
Legend for Arrow DOWN (4-key models only)	3D00		269
Custom String for Display Legend	-		269
Action Configuration for Function KeysAction Configuration for Function Keys	F1 no action configured		271
Function Keys Configuration for 16-key Models Only	-		272
Function Keys Configuration for 4-key Models Only	-		273
Configure string 1-5.	-		274
Set Action for F1 in Batch Context	-		276
Set Action for F2 in Batch Context	-		276
Set Action for F3 (Arrow up in 4K Model) in Batch context	-		277
Set Action for F4 (Arrow Down in 4K Model) in Batch context	-		277
Set Action for Shift (16K Model) in Batch context	-		277
Last Code Shown Timeout	2 sec		278
Display Time Stamping Mode	Applied to both		278
Mode Selection	Set to normal mode		279
Quantity Field	Transmit code with default qty ('1')		279
Quantity/Code Send Mode	Qty precedes Code		280
Quantity/Code Separator	No separator		280
Interkey Timeout	1.0 seconds		281
Append Code	Overwrite always		282
Echo	Full Keypad echo		283
Keypress Sound	Disable		283
Lower Case	Disable Lower Case		284
Enable Legend	Show Display Legend Row		284
Set Function Key Labels	0x000000000000000000000000		285
Barcode/Key Different Data Format	Disable		286
Set Barcode Header	-		286

PARAMETERS	DEFAULT	YOUR SETTING	PAGE NUMBER
Set Barcode Terminator	-		286
Set Key Sequence ID	-		287
Set Key Sequence Header	-		287
Set Key Sequence Terminator	-		287
Set String ID	0x000000000000000000000000		288
Set String Header	0x000000000000000000000000		288
Set String Terminator	0x000000000000000000000000		289
POWER MANAGEMENT			
Powerdown Timeout	30 minutes		291
Battery Profiles	Maximum performance		292
WIRELESS FEATURES			
Good Transmission Beep	Enable		296
Beep Frequency	High		296
Beep Duration	80 msec		297
Beep Volume	High		298
Disconnect Beep	Enable		298
Docking (Connecting) Beep	Enable		299
Leash Alarm	Disable		299
Base Button Enable	Enable		300
Battery level indication with Double TAP	Enable		301
Automatic Configuration Update	Enable		302
Copy Configuration to Reader	-		302
Copy Configuration to Base Station	-		302
Batch Mode	Disable		303
Send Batch	-		303
Erase Batch Memory	-		304
Send but do not Erase Batch Memory	-		304
RF Batch Mode Transmit Delay	No delay		304
Direct Radio Autolink	Unlink Label Required		305
Source Radio Address Transmission	Do not include		306

PARAMETERS	DEFAULT	YOUR SETTING	PAGE NUMBER
Source Radio Address Delimiter Character	No delimiter character		306
Extended Statistics	Enable		307
Hand Held Statistic Frequency	Every minute		307
REAL TIME CLOCK (RTC) CONFIGURATION			
Time Tx Format	hh:mm:ss (ISO 8601)		308
Date Transmission Format	yyyy-mm-dd (ISO 8601)		308
Date-Time Separator	Disable		309
Date-Time Transmission Order	Disable		310
BLUETOOTH-ONLY FEATURES			
Bluetooth Security Level	Level 1 - lowest		311
Bluetooth Radio Output Power	Class 1 (highest)		312
Wi-Fi Channels Exclusion	Automatic		312
Bluetooth Discoverable Mode Time-out	3 minutes		318
Bluetooth Friendly Name	-		319
BLUETOOTH HID FEATURES			
Bluetooth HID Alt Mode	OFF		320
FEATURES FOR STAR MODELS ONLY			
STAR Radio Protocol Timeout	2 seconds		321
STAR Radio Transmit Mode	ACK from Base Station		321
4 Digit Address Stamping	Disable		323
Assign Unique Address to the Gun	-		323
4 Digit Cradle Address Stamping	-		324
Cradle Address Stamping	Disable		324
Cradle Address Delimiter	00 (no delimiter character)		325
STAR System Speed	High Speed		325
STAR Frequency Agility	Disable		326

DEFAULT EXCEPTIONS

Table 39 - Default Exceptions by Interface Type

PARAMETER	DEFAULT EXCEPTION
Interfaces: USB-OEM	
Global Suffix	No Global Suffix
Interfaces: USB Keyboard	
No unique settings	
Interface: RS232-WN	
Expand UPC-A to EAN-13	Enable
UPC-E Check Character Transmission	Disable
Parity	Odd Parity
Handshaking Control	RTS/CTS
Transmission Label ID Code	Prefix
GS1-128 AIM ID	Disable
UPCE Label ID Character(s)	C
EAN 8 Label ID Character(s)	B
EAN 13 Label ID Character(s)	A
Code ISBN Label ID Character(s)	A
Code 39 Label ID Character(s)	M
Interleaved 2of 5 Label ID Character(s)	I
Code Standard 2/5 Label ID Character(s)	H
Codabar Label ID Character(s)	N
Code 128 Label ID Character(s)	K
GS1-128 Label ID Character(s)	P
Datalogic 2 of 5 Label ID Character(s)	H
ISBT 128 Label ID Character(s)	K
UPCE P2 Label ID Character(s)	C
UPCE/P5 Label ID Character(s)	C
UPCE/GS1-128 Label ID Character(s)	C
EAN8/P2 Label ID Character(s)	B
EAN8/P5 Label ID Character(s)	B
EAN8/GS1-128 Label ID Character(s)	B
EAN13/P2 Label ID Character(s)	A
EAN13/P5 Label ID Character(s)	A
EAN13/GS1-128 Label ID Character(s)	A
GS1 DataBar 14 (Omnidirectional) Label ID Character(s)	E

PARAMETER	DEFAULT EXCEPTION
GS1 DataBar Expanded Label ID Character(s)	E
GS1 DataBar Limited Label ID Character(s)	E
Character Conversion	CR to `
Interface: RS232-OPOS	
Baud Rate	115200 Baud
Transmission Label ID Code	Prefix
GS1-128 AIM ID	Disable
UPCA Label ID Character(s)	C
UPCE Label ID Character(s)	D
EAN 8 Label ID Character(s)	A
EAN 13 Label ID Character(s)	B
Code ISBN Label ID Character(s)	@
Code 39 Label ID Character(s)	V
Code 32 Label ID Character(s)	X
Interleaved 2of5 Label ID Character(s)	N
Code Standard 2/5 Label ID Character(s)	P
Codabar Label ID Character(s)	R
Code 11 Label ID Character(s)	b
Code 128 Label ID Character(s)	T
GS1-128 Label ID Character(s)	k
UPCA/P2 Label ID Character(s)	F
UPCA/P5 Label ID Character(s)	G
UPCA/GS1-128 Label ID Character(s)	Q
UPCE P2 Label ID Character(s)	H
UPCE/P5 Label ID Character(s)	I
EAN8/P2 Label ID Character(s)	J
EAN8/P5 Label ID Character(s)	K
EAN8/GS1-128 Label ID Character(s)	*
EAN13/P2 Label ID Character(s)	L
EAN13/P5 Label ID Character(s)	M
EAN13/GS1-128 Label ID Character(s)	#
GS1 DataBar 14 (Omnidirectional) Label ID Character(s)	u
GS1 DataBar Expanded Label ID Character(s)	t
GS1 DataBar Limited Label ID Character(s)	v

APPENDIX D
AIDA LED

In this configuration, the LEDs behave as described below.

CM9681-N100 WITH ENABLED AIDA LED MODE

BF/NS LED (Bus Failure)

LED STATE	COMMENTS
Off	No problems detected
Red	Major internal error (combined with a red SF LED) Station name not set IP address not set Other configuration error

SF/MS LED (System Failure)

LED STATE	COMMENTS
Off	No problems detected
Red	Device in EXCEPTION state Major internal error (combined with a red BF LED) Diagnostic event(s) present

Link/Activity

LED STATE	COMMENTS
Off	No link, no communication present
Green	Ethernet link established
Green, blinking	Used by engineering tools to identify the node on the network 500 ms on, 500 ms off for 3 seconds
Orange, flashing	Activity

CM9681-N100 WITH DISABLED AIDA LED MODE

BF/NS LED (Network Status)

LED STATE	COMMENTS
Off	No connection
Green	Connected with IO controller in RUN state
Green (1 flash)	Connected with IO controller in STOP state
Red	Major internal error (combined with a red MS LED)
Red, flashing	Station name not set IP address not set Other configuration error

SF/MS LED (Module Status)

LED STATE	COMMENTS
Off	No power or module in setup
Green	Normal operation
Green, flashing	Diagnostic event(s) present
Red	Device in EXCEPTION state Major internal error (combined with a red NS LED)

Link/Activity

LED STATE	COMMENTS
Off	No communication present
Green	Ethernet link established
Green, blinking	Ethernet link established, communication present

CM9681-N200

BF/NS LED (Network Status)

LED STATE	COMMENTS
Off	No power or no IP address
Green	Online, one or more connections established
Green, flashing	Online, no connections established
Red	Duplicate IP address, FATAL error
Red, flashing	One or more connections timed out

SF/MS LED (Module Status)

LED STATE	COMMENTS
Off	No power
Green	Run state

LED STATE	COMMENTS
Green, flashing	Not configured or idle state
Red	Major fault
Red, flashing	Recoverable fault(s). Module is configured, but stored parameters differ from currently used parameters

P1 and P2 LEDs (Link/Activity)

LED STATE	COMMENTS
Off	No link, no activity
Green	Link (100 Mbit/s) established
Green, flashing	Activity (100 Mbit/s)
Yellow	Link (10 Mbit/s) established
Yellow, flashing	Activity (10 Mbit/s)

APPENDIX E
HOST COMMANDS CHARACTERS

The scanner shall recognize the following host commands when transmitted to the scanner over the standard RS-232 host port (RS232, RS232-WN, RS232-OPOS) or the Aux port or USB-COM port.

CHARACTER	COMMAND
'i' (0x69)	Device Information (Used by OPOS/JPOS)[a]
'h' (0x68)	Device health (Used by OPOS/JPOS)[a]
's' (0x73)	Device statistics (Used by OPOS/JPOS)[a]
<SOH> (0x01)	Beep and Viber good read tone with no regard for configuration control
<BEL> (0x07)	Beep on Bell (see Beep on Bell configuration item)
'R'	Reset Scanner
'B'	Beep and Viber good read tone
'F'	Not on File (Disable scanner and sound not on file Beep)
'E'	Scanner Enable[b]
'D'	Scanner Disable[b]
't'	Reserved
'T'	SW Trigger pull. Simulate a trigger pull
'X'	SW Trigger released. Simulate a trigger pull.
'S'...<CR>	Reserved
'x'...<CR>	Reserved for Image Capture protocol
34<CR>	Beep Low Tone
01<CR>	Beep High Tone
'd'	Docking State (Mobile only)[a]

a. Can be configured.
b. The reply of these commands are in the format: {SOH}{STX}...{ETX}{EOT}

APPENDIX F
SAMPLE BARCODES

The sample bar codes in this appendix are typical representations for their symbology types.

SAMPLE BARCODES

1D Barcodes

UPC-A

EAN-13

Code 39

Code 128

Interleaved 2 of 5

12345678901231

Code 32

B9P91Q

Codabar

13579

Code 93

ABCDEF

Code 11

123456789

GS1 DataBar™ (RSS)

GS1 DataBar™ variants must be enabled to read the barcodes below (see "GS1 DataBar™ Omnidirectional" on page 158).

GS1 DataBar™ Expanded Stacked

1029384756019283746501928374602947845036652 3

GS1 DataBar™ Expanded

1234890hjio9900mnb

GS1 DataBar™ Limited

08672345650916

GS1 DataBar™ (-14)

GS1 DataBar™ Omnidirectional Truncated

55432198673467

GS1 DataBar™ Omnidirectional Stacked

90876523412674

GS1 DataBar™ Omnidirectional Stacked

78123465709811

2D Barcodes

Aztec

Data Matrix

China Sensible

MaxiCode

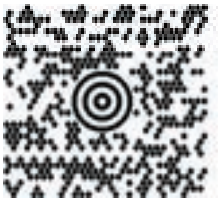

Test Message

PDF417

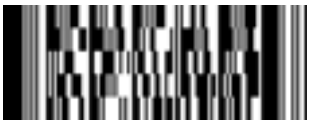

ABCabc

Micro PDF 417

BV17453

QR Code

35900G9

2D Barcodes (continued)

Micro QR Code

123456

UCC Composite

(17) 050923 (10) ABC123

(01) 0 4012345 67890 1 1

APPENDIX G
KEYPAD

Use the bar codes in this appendix to enter numbers as you would select digits/characters from a keypad.

A

B

C

D

E

F

0

1

2

3

4

5

6

7

8

9

CANCEL

APPENDIX H
SCANCODE TABLES

CONTROL CHARACTER EMULATION

Control character emulation selects from different scancode tables as listed in this appendix. Each of the control character sets below are detailed by interface type in the tables. These apply to USB Keyboard platforms.

Control Character 00 : Characters from 00 to 0x1F are sent as control character Ctrl+Keys, special keys are located from 0x80 to 0xA1.

Control Character 01 : Characters from 00 to 0x1F are sent as control character Ctrl+Capital Key, special keys are located from 0x80 to 0xA1.

Control Character 02 : Special keys are located from 00 to 0x1F and characters from 0x80 to 0xFE are intended as an extended ASCII table.

Single Press and Release Keys

In the following tables, Ar↓ means Alt right pressed and Ar↑ means Alt right released and so on. Definitions for other keys are Al (Alt left), Cr (Control Right) Cl (Control Left) Sh (shift). This method can be used for combining Alt, Control or Shift with other keys.

Example: Consider a Control character set to 00. If AltRight+A is required before sending a label to the host, it could be done by setting three Prefix keys in this way: 0x99 0x41 0x9A.

INTERFACE TYPE USB-KEYBOARD OR USB-KEYBOARD FOR APPLE

Table 40. Scancode Set When Control Character is 00 or 01

	x0	x1	x2	x3	x4	x5	X6	x7	x8	x9	xA	xB	xC	xD	xE	xF
0x	NULL C+@	SOH C(S)+A	STX C(S)+B	ETX C(S)+C	EOT C(S)+D	ENQ C(S)+E	ACK C(S)+F	BEL C(S)+G	BS	HT TAB	LF C(S)+J	VT C(S)+K	FF C(S)+L	CR Enter	SO C(S)+N	SI C(S)+O
1x	DLE C(S)+P	DC1 C(S)+Q	DC2 C(S)+R	DC3 C(S)+S	DC4 C(S)+T	NAK C(S)+U	SYN C(S)+V	ETB C(S)+W	CAN C(S)+X	EM C(S)+Y	SUB C(S)+Z	ESC Esc	FS C+\	GS C+]	RS C+^	US C(S)+_
2x	SP	!	"	#	$	%	&	'	(	)	*	+	,	-	.	/
3x	0	1	2	3	4	5	6	7	8	9	:	;	<	=	>	?
4x	@	A	B	C	D	E	F	G	H	I	J	K	L	M	N	O
5x	P	Q	R	S	T	U	V	W	X	Y	Z	[	\	]	^	_
6x	`	a	b	c	d	e	f	g	h	i	j	k	l	m	n	o
7x	p	q	r	s	t	u	v	w	x	y	z	{	|	}	~	Del
8x	€	Sh↓	Sh↑	Ins	Ent (keyp)	F1	F2	F3	F4	F5	F6	F7	F8	F9	F10	F11
9x	F12	Home	End	Pg Up	Pg Dwn	↑	↓	←	→	Ar↓	Ar↑	Al↓	Al↑	Cl ↓	Cl ↑	Cr ↓
Ax	Cr ↑		‘	ƒ	„	…	†	‡	ˆ	‰	Š	‹	Ś	‹	Œ	
Bx	°	±	²	³	´	µ	¶	·	¸	¹	º	»	¼	½	¾	¿
Cx	À	Á	Â	Ã	Ä	Å	Æ	Ç	È	É	Ê	Ë	Ì	Í	Î	Ï
Dx	Ð		Ò	Ó	Ô	Õ	Ö	×	Ø	Ù	Ú	Û	Ü	Ý	Þ	ß
Ex	à	á	â	ã	ä	å	æ	ç	è	é	ê	ë	ì	í	î	ï
Fx	ð	ñ	ò	ó	ô	õ	ö	÷	ø	ù	ú	û	ü	ý	þ	ÿ

Extended characters (sky blue) are sent through dedicated keys (when available in the selected country mode) or by using an Alt Mode sequence.

Interface Type USB-Keyboard or USB-Keyboard for APPLE (continued)

Table 41. Scancode Set When Control Character is 02

	x0	x1	x2	x3	x4	x5	X6	x7	x8	x9	xA	xB	xC	xD	xE	xF
0x	Ar↓	Ar↑	Al↓	Al ↑	Cl ↓	Cl ↑	Cr ↓	Cr ↑	BS	Tab	→	S+ Tab	Enter Keypd	Enter	Ins	Pg Up
1x	Pg Dwn	Home	←	↓	↑	F6	F1	F2	F3	F4	F5	ESC	F7	F8	F9	F10
2x	Space	!	“	#	$	%	&	‘	(	)	*	+	,	-	.	/
3x	0	1	2	3	4	5	6	7	8	9	:	;	<	=	>	?
4x	@	A	B	C	D	E	F	G	H	I	J	K	L	M	N	O
5x	P	Q	R	S	T	U	V	W	X	Y	Z	[	\	]	^	_
6x	`	a	b	c	d	e	f	g	h	i	j	k	l	m	n	o
7x	p	q	r	s	t	u	v	w	x	y	z	{	|	}	~	Del
8x	€		‘	ƒ	„	…	†	‡	ˆ	‰	Š	‹	Ś	‹	Œ	
9x		‘	’	“	”	•	–	—	˜	™	š	›	œ		ž	Ÿ
Ax	NBSP	¡	¢	£	¤	¥	¦	§	¨	©	ª	«	¬	-	®	¯
Bx	°	±	²	³	´	µ	¶	·	¸	¹	º	»	¼	½	¾	¿
Cx	À	Á	Â	Ã	Ä	Å	Æ	Ç	È	É	Ê	Ë	Ì	Í	Î	Ï
Dx	Ð		Ò	Ó	Ô	Õ	Ö	×	Ø	Ù	Ú	Û	Ü	Ý	Þ	ß
Ex	à	á	â	ã	ä	å	æ	ç	è	é	ê	ë	ì	í	î	ï
Fx	ð	ñ	ò	ó	ô	õ	ö	÷	ø	ù	ú	û	ü	ý	þ	ÿ

INTERFACE TYPE USB-KEYBOARD ALT MODE

Table 42. Scancode Set When Control Character is 00 or 01

	x0	x1	x2	x3	x4	x5	X6	x7	x8	x9	xA	xB	xC	xD	xE	Xf
0x	Alt+000	Alt+001	Alt+002	Alt+003	Alt+004	Alt+005	Alt+006	Alt+007	BS	HT TAB	Alt+010	Alt+011	Alt+012	CR Enter	Alt+014	Alt+015
1x	Alt+016	Alt+017	Alt+018	Alt+019	Alt+020	Alt+021	Alt+022	Alt+023	Alt+024	Alt+025	Alt+026	ESC Esc	Alt+028	Alt+029	Alt+030	Alt+031
2x	A+032	A+033	A+034	A+035	A+036	A+037	A+038	A+039	A+040	A+041	A+042	A+043	A+044	A+045	A+046	A+047
3x	A+048	A+049	A+050	A+051	A+052	A+053	A+054	A+055	A+056	A+057	A+058	A+059	A+060	A+061	A+062	A+063
4x	A+064	A+065	A+066	A+067	A+068	A+069	A+070	A+071	A+072	A+073	A+074	A+075	A+076	A+077	A+078	A+079
5x	A+080	A+081	A+082	A+083	A+084	A+085	A+086	A+087	A+088	A+089	A+090	A+091	A+092	A+093	A+094	A+095
6x	A+096	A+097	A+098	A+099	A+100	A+101	A+102	A+103	A+104	A+105	A+106	A+107	A+108	A+109	A+110	A+111
7x	A+112	A+113	A+114	A+115	A+116	A+117	A+118	A+119	A+120	A+121	A+122	A+123	A+124	A+125	A+126	A+127
8x	€	Sh↓	Sh↑	Ins	Ent (keyp)	F1	F2	F3	F4	F5	F6	F7	F8	F9	F10	F11
9x	F12	Home	End	Pg Up	Pg Dwn	↑	↓	←	→	Ar↓	Ar↑	Al↓	Al ↑	Cl ↓	Cl ↑	Cr ↓
Ax	Cr ↑	A+0161	A+0162	A+0163	A+0164	A+0165	A+0166	A+0167	A+0168	A+0169	A+0170	A+0171	A+0172	A+0173	A+0174	A+0175
Bx	A+0176	A+0177	A+0178	A+0179	A+0180	A+0181	A+0182	A+0183	A+0184	A+0185	A+0186	A+0187	A+0188	A+0189	A+0190	A+0191
Cx	A+0192	A+0193	A+0194	A+0195	A+0196	A+0197	A+0198	A+0199	A+0200	A+0201	A+0202	A+0203	A+0204	A+0205	A+0206	A+0207
Dx	A+0208	A+0209	A+0210	A+0211	A+0212	A+0213	A+0214	A+0215	A+0216	A+0217	A+0218	A+0219	A+0220	A+0221	A+0222	A+0223
Ex	A+0224	A+0225	A+0226	A+0227	A+0228	A+0229	A+0230	A+0231	A+0232	A+0233	A+0234	A+0235	A+0236	A+0237	A+0238	A+0239
Fx	A+0240	A+0241	A+0242	A+0243	A+0244	A+0245	A+0246	A+0247	A+0248	A+0249	A+0250	A+0251	A+052	A+0253	A+0254	A+0255

Interface Type USB-Keyboard Alt Mode (continued)

Table 43. Scancode Set When Control Character is 02

	x0	x1	x2	x3	x4	x5	X6	x7	x8	x9	xA	xB	xC	xD	xE	xF
0x	Ar↓	Ar↑	Al↓	Al ↑	Cl ↓	Cl ↑	Cr ↓	Cr ↑	BS	Tab	→	S+ Tab	Enter Keypd	Enter	Ins	Pg Up
1x	Pg Dwn	Home	←	↓	↑	F6	F1	F2	F3	F4	F5	ESC	F7	F8	F9	F10
2x	A+032	A+033	A+034	A+035	A+036	A+037	A+038	A+039	A+040	A+041	A+042	A+043	A+044	A+045	A+046	A+047
3x	A+048	A+049	A+050	A+051	A+052	A+053	A+054	A+055	A+056	A+057	A+058	A+059	A+060	A+061	A+062	A+063
4x	A+064	A+065	A+066	A+067	A+068	A+069	A+070	A+071	A+072	A+073	A+074	A+075	A+076	A+077	A+078	A+079
5x	A+080	A+081	A+082	A+083	A+084	A+085	A+086	A+087	A+088	A+089	A+090	A+091	A+092	A+093	A+094	A+095
6x	A+096	A+097	A+098	A+099	A+100	A+101	A+102	A+103	A+104	A+105	A+106	A+107	A+108	A+109	A+110	A+111
7x	A+112	A+113	A+114	A+115	A+116	A+117	A+118	A+119	A+120	A+121	A+122	A+123	A+124	A+125	A+126	A+127
8x	A+0128	A+0129	A+0130	A+0131	A+0132	A+0133	A+0134	A+0135	A+0136	A+0137	A+0138	A+0139	A+0140	A+0141	A+0142	A+0143
9x	A+0144	A+0145	A+0146	A+0147	A+0148	A+0149	A+0150	A+0151	A+0152	A+0153	A+0154	A+0155	A+0156	A+0157	A+0158	A+0159
Ax	A+0160	A+0161	A+0162	A+0163	A+0164	A+0165	A+0166	A+0167	A+0168	A+0169	A+0170	A+0171	A+0172	A+0173	A+0174	A+0175
Bx	A+0176	A+0177	A+0178	A+0179	A+0180	A+0181	A+0182	A+0183	A+0184	A+0185	A+0186	A+0187	A+0188	A+0189	A+0190	A+0191
Cx	A+0192	A+0193	A+0194	A+0195	A+0196	A+0197	A+0198	A+0199	A+0200	A+0201	A+0202	A+0203	A+0204	A+0205	A+0206	A+0207
Dx	A+0208	A+0209	A+0210	A+0211	A+0212	A+0213	A+0214	A+0215	A+0216	A+0217	A+0218	A+0219	A+0220	A+0221	A+0222	A+0223
Ex	A+0224	A+0225	A+0226	A+0227	A+0228	A+0229	A+0230	A+0231	A+0232	A+0233	A+0234	A+0235	A+0236	A+0237	A+0238	A+0239
Fx	A+0240	A+0241	A+0242	A+0243	A+0244	A+0245	A+0246	A+0247	A+0248	A+0249	A+0250	A+0251	A+052	A+0253	A+0254	A+0255

APPENDIX I
ASCII CHART

ASCII Char.	Hex No.	ASCII Char.	Hex No.	ASCII Char.	Hex No.	ASCII Char.	Hex No.
NUL	00	SP	20	@	40	‘	60
SOH	01	!	21	A	41	a	61
STX	02	“	22	B	42	b	62
ETX	03	#	23	C	43	c	63
EOT	04	$	24	D	44	d	64
ENQ	05	%	25	E	45	e	65
ACK	06	&	26	F	46	f	66
BEL	07	’	27	G	47	g	67
BS	08	(	28	H	48	h	68
HT	09	)	29	I	49	i	69
LF	0A	*	2A	J	4A	j	6A
VT	0B	+	2B	K	4B	k	6B
FF	0C	,	2C	L	4C	l	6C
CR	0D	-	2D	M	4D	m	6D
SO	0E	.	2E	N	4E	n	6E
SI	0F	/	2F	O	4F	o	6F
DLE	10	0	30	P	50	p	70
DC1	11	1	31	Q	51	q	71
DC2	12	2	32	R	52	r	72
DC3	13	3	33	S	53	s	73
DC4	14	4	34	T	54	t	74
NAK	15	5	35	U	55	u	75
SYN	16	6	36	V	56	v	76
ETB	17	7	37	W	57	w	77
CAN	18	8	38	X	58	x	78
EM	19	9	39	Y	59	y	79
SUB	1A	:	3A	Z	5A	z	7A
ESC	1B	;	3B	[	5B	{	7B
FS	1C	<	3C	\	5C	|	7C
GS	1D	=	3D	]	5D	}	7D
RS	1E	>	3E	^	5E	~	7E
US	1F	?	3F	_	5F	DEL	7F

© 2011-2024 Datalogic S.p.A. and /or its affiliates • All rights reserved • Without limiting the rights under copyright, no part of this documentation may be reproduced, stored in or introduced into a retrieval system, or transmitted in any form or by any means, or for any purpose, without the express written permission of Datalogic S.p.A. and/or its affiliates • Datalogic and the Datalogic logo are registered trademarks of Datalogic S.p.A. in many countries, including the U.S. and the E.U.

DATALOGIC

www.datalogic.com

Datalogic S.r.l.
Via S. Vitalino, 13 | 40012 Calderara di Reno | Bologna - Italy
Tel. +39 051 3147011 | Fax +39 051 3147205

800000120 (Rev. D) January 2024