TC53/TC58

Touch Computer

Product Reference Guide
for Android™

ZEBRA

MN-004396-08EN Rev. A

2026/02/05

ZEBRA and the stylized Zebra head are trademarks of Zebra Technologies Corporation, registered in many jurisdictions worldwide. Google, Android, Google Play and other marks are trademarks of Google LLC. All other trademarks are the property of their respective owners. ©2026 Zebra Technologies Corporation and/or its affiliates. All rights reserved.

Information in this document is subject to change without notice. The software described in this document is furnished under a license agreement or nondisclosure agreement. The software may be used or copied only in accordance with the terms of those agreements.

For further information regarding legal and proprietary statements, please go to:

SOFTWARE: zebra.com/informationpolicy.
COPYRIGHTS: zebra.com/copyright.
PATENTS: ip.zebra.com.
WARRANTY: zebra.com/warranty.
END USER LICENSE AGREEMENT: zebra.com/eula.

Terms of Use

Proprietary Statement

This manual contains proprietary information of Zebra Technologies Corporation and its subsidiaries (“Zebra Technologies”). It is intended solely for the information and use of parties operating and maintaining the equipment described herein. Such proprietary information may not be used, reproduced, or disclosed to any other parties for any other purpose without the express, written permission of Zebra Technologies.

Product Improvements

Continuous improvement of products is a policy of Zebra Technologies. All specifications and designs are subject to change without notice.

Liability Disclaimer

Zebra Technologies takes steps to ensure that its published Engineering specifications and manuals are correct; however, errors do occur. Zebra Technologies reserves the right to correct any such errors and disclaims liability resulting therefrom.

Limitation of Liability

In no event shall Zebra Technologies or anyone else involved in the creation, production, or delivery of the accompanying product (including hardware and software) be liable for any damages whatsoever (including, without limitation, consequential damages including loss of business profits, business interruption, or loss of business information) arising out of the use of, the results of use of, or inability to use such product, even if Zebra Technologies has been advised of the possibility of such damages. Some jurisdictions do not allow the exclusion or limitation of incidental or consequential damages, so the above limitation or exclusion may not apply to you.

Contents

About This Guide **13**
Configurations 13
Notational Conventions 22
Icon Conventions 22
Service Information 23
NFC Wayfinding System Disclosure Statement 23
Determining Software Versions 23
Determining the Serial Number 24

Getting Started **25**
Unpacking the Device 25
Features 26
Setting Up the Device 28
Installing a microSD Card 29
Installing the SIM Card 31
Installing the Battery 33
Using the Rechargeable Li-Ion Battery with BLE Beacon 33
Using the Rechargeable Li-Ion Wireless Battery 34
Charging the Battery 34
Replacing the Battery 35
Replacing the microSD Card 37
Replacing the SIM Card 38

Using the Device **41**
Home Screen 41

Setting the Home Screen Rotation....44
Status Bar....44
Managing Notifications....48
Opening the Quick Access Panel....50
Editing the Quick Access Tiles....54
Battery Management....54
Low Battery Notification....55
Battery True Hot Swap....55
Turning Off the Radios....57
Interactive Sensor Technology....58
Waking the Device....58
USB Communication....58
Transferring Files....59
Transferring Photos....59
Disconnecting from the Host Computer....59

Settings....60
Accessing Settings....60
Display Settings....60
Setting the Screen Brightness Automatically....60
Setting the Screen Brightness Manually....60
Setting Night Light....61
Setting Screen Rotation....61
Setting Screen Timeout....61
Setting Lock Screen Notifications....62
Setting Font Size....62
Setting Display Size....62
Notification LED Brightness Level....63
Setting Touch Panel Mode....63
Setting the Date and Time....64
General Sound Setting....64
Sound Options....64
Zebra Volume Controls....65
Setting Wake-Up Sources....65

Remapping a Button....66
Remappable Keys....67
Alert Button....67
Configure the Alert Button....67
Alert Accessibility Service....68
Using an Alert Button....68
Keyboards....68
Keyboard Configuration....68
Using the Android and Gboard Keyboards....68
Enterprise Keyboard....69
Language Usage....70
Changing the Language Setting....70
Adding Words to the Dictionary....70
Notifications....70
Setting App Notifications....71
Viewing Notifications....71
Controlling Lock Screen Notifications....72
Enabling Blink Light....72

Applications....73
Installed Applications....73
Accessing Apps....74
Switching Between Recent Apps....74
Battery Manager....75
Opening Battery Manager....75
Battery Manager Information Tab....75
Battery Manager Swap Tab....77
Camera....77
Taking Photos....77
Recording Videos....79
Quick Camera Photo Mode and Video Mode Settings....82
Android 11 Camera Settings....83
Android 13 Camera and Video Settings....84
DWDemo....85

DWDemo Icons....85
Selecting a Scanner....86
RxLogger....86
RxLogger Configuration....87
Configuration File....87
Enabling Logging....87
Disabling Logging....87
Extracting Log Files....87
Backing Up Data....87
RxLogger Utility....88

Data Capture....89
Imaging....89
Digital Camera....89
Operational Modes....90
Scanning Considerations....91
Scanning with Internal Imager....91
Scanning with Internal Camera....93
Scanning with the RS507/RS507X Hands-Free Imager....94
Scanning with the RS5100 Ring Scanner....96
Scanning with the RS6000 Bluetooth Ring Scanner....97
Scanning with the DS3678 Bluetooth Scanner....100
Scanning with the LI3678 Linear Imager....102
Scanning with the DS2278 Digital Scanner....103
Scanning with the DS8178 Digital Scanner....104
Pairing a Bluetooth Ring Scanner....105
Pairing in SSI Mode Using Near Field Communication....106
Pairing in HID Mode Using Near Field Communication....106
Pairing Using Simple Serial Interface (SSI)....107
Pairing the Ring Scanner Using Bluetooth Human Interface Device....107
Pairing a Bluetooth Scanner....108
Pairing Using Simple Serial Interface....108
Pairing in SSI Mode Using Near Field Communication....109
DataWedge....110

Enabling DataWedge....110
Disabling DataWedge....110
Supported Decoders....110
Camera Supported Decoders....110
SE4720 Internal Imager Supported Decoders....111
SE55 Internal Imager Supported Decoders....112
RS507/RS507x Supported Decoders....113
RS5100 Supported Decoders....114
RS6000 Supported Decoders....114
DS2278 Supported Decoders....115
DS3678 Supported Decoders....116
DS8178 Supported Decoders....117
LI3678 Supported Decoders....118

Wireless....119
Wireless Wide Area Networks....119
Sharing the Mobile Data Connection....119
Data Usage....121
Cellular Network Settings....122
Wireless Local Area Network....125
Connecting to a Wi-Fi Network....126
Removing a Wi-Fi Network....126
WLAN Configuration....127
Bluetooth....131
Adaptive Frequency Hopping....132
Security....132
Bluetooth Profiles....133
Bluetooth Power States....134
Bluetooth Radio Power....134
Enabling Bluetooth....134
Disabling Bluetooth....134
Discovering Bluetooth Device(s)....134
Changing the Bluetooth Name....135
Connecting to a Bluetooth Device....135

Selecting Profiles on the Bluetooth Device....135
Unpairing a Bluetooth Device....135
Cast....136
Near Field Communication....136
Reading NFC Cards....136
Enterprise NFC Settings....137

Calls....138
Emergency Calling....138
Audio Modes....138
Bluetooth Headset....138
Wired Headset....139
Adjusting Audio Volume....140
Making a Call Using the Dialer....140
Accessing Dialing Options....141
Make a Call Using Contacts....141
Using the Dialer....141
Using the Contacts App....142
Make a Call Using Call History....142
Using the Call History List....142
Making a Conference Call on GSM....142
Making a Call Using a Bluetooth Headset....143
Answering Calls....143
Call Settings....144

Accessories....147
Device Accessories....147
Main Battery Charging....150
Spare Battery Charging....150
Charging Temperature....151
Charging the Device in the Cradle....151
Inserting a TC5X Shim into Cradle....152
2-Slot (1 Device/1 Spare Battery) USB Cradle....153

2-Slot (1 Device/1 Spare Battery) Ethernet and Communication Setup....155
Ethernet Settings....155
5-Slot Charge Only Cradle....157
5-Slot Ethernet Cradle....158
Daisy-chaining Ethernet Cradles....159
Establishing Ethernet Connection....160
5-Slot (4 Device/4 Spare Battery) Charge Only Cradle with Battery Charger....161
Charging Spare Batteries....161
4-Slot Battery Charger....162
Single Charger Setup....163
Two Charger Setup....164
Charging Spare Batteries....165
Rugged Boot....166
Installation....166
Removal....167
Installing Stylus....168
Installing Stylus with Hand Strap....171
Basic Hand Strap....173
Installation....173
Removal....174
3.5 mm Audio Adapter....175
USB Headset....176
Charge/USB-C Cable....178
Connecting Charge/USB-C Cable to Device....178
USB Communication....178
Charging the Device....179
Trigger Handle....180
Inserting the Device into the Trigger Handle....181
Removing the Device from the Trigger Handle....182
Installing the Optional Lanyard....182
Power Supply....183
5-Slot Cradle Rack Installation....184
Four 4-Slot Battery Charger Bracket Installation....187
Rack Mount Installation....190

Wall Installation....193
Bottom Tray Assembly....193
Mounting the Bracket....194

Application Deployment....196
Security....196
Secure Certificates....196
Installing a Secure Certificate....197
Configuring Credential Storage Settings....197
Android Development Tools....197
Android Development Workstation....197
Enabling Developer Options....198
EMDK for Android....198
StageNow for Android....198
GMS Restricted....199
ADB USB Setup....199
Application Installation Methods....200
Installing Applications Using the USB Connection....200
Installing Applications Using the Android Debug Bridge....201
Installing Applications Using Wireless ADB....201
Installing Applications Using a microSD Card....204
Uninstalling an Application....205
Android System Update....206
Performing a System Update Using microSD Card....206
Performing a System Update Using ADB....206
Verifying System Update Installation....207
Android-Enterprise Reset....207
Performing an Enterprise Reset Using microSD Card....208
Performing an Enterprise Reset Using ADB....208
Android Factory Reset....209
Performing a Factory Reset Using microSD Card....209
Performing a Factory Reset Using ADB....210
Android Storage....210
Random Access Memory....211

Viewing Memory....211
Internal Storage....211
External Storage....211
Managing Apps....213
App Details....213
Managing Downloads....213

Maintenance and Troubleshooting....215
Maintaining the Device....215
Display Best Practices....215
Best Practices for Enterprise Mobile Devices Operating in Hot Environments and Direct Sunlight....216
Battery Safety Guidelines....216
Cleaning Instructions....217
Cleaning and Disinfecting Guidelines....217
Approved Cleaning and Disinfectant Agents....218
Special Cleaning Notes....218
Cleaning Frequency....218
Cleaning the Device....219
Housing....219
Display....219
Camera and Exit Window....219
Battery Guide Slots....219
Cleaning the Battery Connector....219
Cleaning Cradle Connectors....221
Troubleshooting....221
Resetting the Device....221
Device Troubleshooting....222
2-Slot Charge Only Cradle Troubleshooting....224
5-Slot Charge Only Cradle Troubleshooting....225
4-Slot Battery Charger Troubleshooting....225
5-Slot Ethernet Cradle Troubleshooting....226

Technical Specifications **227**
SE4720 Decode Distances 227
SE55 Decode Distances 228
1-Slot Charge Only Cradle Technical Specifications 228
4-Slot Battery Charger Technical Specifications 229
5-Slot Charge Only Cradle Technical Specifications 230
5-Slot Ethernet Cradle Technical Specifications 230
Trigger Handle Technical Specifications 231
Charge/USB Cable Technical Specifications 231

About This Guide

This guide provides information about setting up and using the TC53 and TC58 touch computers. Some screens shown in this guide may differ from the actual screens shown on the device.

This guide includes Android operating system (OS) 11 and above. Android 11 is the baseline, and updated OS releases are indicated in the content where applicable.

Configurations

This guide covers the following configurations:

Table 1 Configurations

Configuration	Radios	Display	Memory	Data Capture Options	Operating System
TC5301-0T1E1B1000-A6	LAN: WiFi 6E, 3.5 mm Headphone Jack, 8 MP FFC, 16 MP RFC, Warm Swap, 4680 mAh Standard Battery, GMS, ROW	6.0” High Definition	6 GB RAM / 64 GB ROM	2D imager (SE4720) and integrated NFC	Android based, Google ™ Mobile Services (GMS)
TC5301-0T1E4B1000-A6	LAN: WiFi 6E, 3.5 mm Headphone Jack, 8 MP FFC, 16 MP RFC, Warm Swap, 4680 mAh Standard Battery, GMS, ROW Only	6.0” High Definition	4 GB RAM / 64 GB ROM	2D imager (SE4720) and integrated NFC	Android based, Google ™ Mobile Services (GMS)
TC5301-0T1E4B1000-IN	LAN: WiFi 6E, 3.5 mm Headphone Jack, 8 MP FFC, 16 MP RFC, Warm Swap, 4680 mAh Standard Battery, GMS, India Only	6.0” High Definition	4 GB RAM / 64 GB ROM	2D imager (SE4720) and integrated NFC	Android based, Google ™ Mobile Services (GMS)

Table 1 Configurations (Continued)

Configuration	Radios	Display	Memory	Data Capture Options	Operating System
TC5301-0T1E4B1000-NA	LAN: WiFi 6E, 3.5 mm Headphone Jack, 8 MP FFC, 16 MP RFC, Warm Swap, 4680 mAh Standard Battery, GMS, NA Only	6.0” High Definition	4 GB RAM / 64 GB ROM	2D imager (SE4720) and integrated NFC	Android based, Google ™ Mobile Services (GMS)
TC5301-0T1E4B1000-TR	LAN: WiFi 6E, 3.5 mm Headphone Jack, 8 MP FFC, 16 MP RFC, Warm Swap, 4680 mAh Standard Battery, GMS, Turkey Only	6.0” High Definition	4 GB RAM / 64 GB ROM	2D imager (SE4720) and integrated NFC	Android based, Google ™ Mobile Services (GMS)
TC5301-0T1E4B1N00-A6	LAN: WiFi 6E, 3.5 mm Headphone Jack, 8 MP FFC, 16 MP RFC, Warm Swap, No Battery Included, GMS, ROW Only	6.0” High Definition	4 GB RAM / 64 GB ROM	2D imager (SE4720) and integrated NFC	Android based, Google ™ Mobile Services (GMS)
TC5301-0T1E7B1000-A6	LAN: WiFi 6E, 3.5 mm Headphone Jack, 8 MP FFC, 16 MP RFC, Warm Swap, 4680 mAh Standard Battery, GMS, ROW Only	6.0” High Definition	8 GB RAM / 128 GB ROM	2D imager (SE4720) and integrated NFC	Android based, Google ™ Mobile Services (GMS)
TC5301-0T1E7B1000-NA	LAN: WiFi 6E, 3.5 mm Headphone Jack, 8 MP FFC, 16 MP RFC, Warm Swap, 4680 mAh Standard Battery, GMS, NA Only	6.0” High Definition	8 GB RAM / 128 GB ROM	2D imager (SE4720) and integrated NFC	Android based, Google ™ Mobile Services (GMS)
TC5301-0T1K4B1000-A6	LAN: WiFi 6E, 3.5 mm Headphone Jack, 8 MP FFC, 16 MP RFC, Warm Swap, 4680 mAh Standard Battery, GMS, ROW Only	6.0” High Definition	4 GB RAM / 128 GB ROM	2D imager advanced range (SE55) and integrated NFC	Android based, Google ™ Mobile Services (GMS)
TC5301-0T1K4B1000-NA	LAN: WiFi 6E, 3.5 mm Headphone Jack, 8 MP FFC, 16 MP RFC, Warm Swap, 4680 mAh Standard Battery, GMS, NA Only	6.0” High Definition	4 GB RAM / 64 GB ROM	2D imager advanced range (SE55) and integrated NFC	Android based, Google ™ Mobile Services (GMS)

Table 1 Configurations (Continued)

Configuration	Radios	Display	Memory	Data Capture Options	Operating System
TC5301-0T1K4B1B00-A6	LAN: WiFi 6E, 3.5 mm Headphone Jack, 8 MP FFC, 16 MP RFC, Warm Swap, 4680 mAh BLE Battery, GMS, ROW Only	6.0” High Definition	4 GB RAM / 64 GB ROM	2D imager advanced range (SE55) and integrated NFC	Android based, Google ™ Mobile Services (GMS)
TC5301-0T1K6B1000-A6	LAN: WiFi 6E, 3.5 mm Headphone Jack, 8 MP FFC, 16 MP RFC, Warm Swap, 4680 mAh Standard Battery, GMS, ROW Only	6.0” High Definition	8 GB RAM / 128 GB ROM	2D imager advanced range (SE55) and integrated NFC	Android based, Google ™ Mobile Services (GMS)
TC5301-0T1K6B1000-NA	LAN: WiFi 6E, 3.5 mm Headphone Jack, 8 MP FFC, 16 MP RFC, Warm Swap, 4680 mAh Standard Battery, GMS, NA Only	6.0” High Definition	8 GB RAM / 128 GB ROM	2D imager advanced range (SE55) and integrated NFC	Android based, Google ™ Mobile Services (GMS)
TC5301-0T1K6B1000-TR	LAN: WiFi 6E, 3.5 mm Headphone Jack, 8 MP FFC, 16 MP RFC, Warm Swap, 4680 mAh Standard Battery, GMS, Turkey Only	6.0” High Definition	8 GB RAM / 128 GB ROM	2D imager advanced range (SE55) and integrated NFC	Android based, Google ™ Mobile Services (GMS)
TC5301-0T1K6E200A-A6	Premium LAN: WiFi 6E, 3.5 mm Headphone Jack, Time Of Flight, 8 MP FFC, 16 MP RFC W OIS, True Hot Swap, 4680 mAh Standard Battery, GMS, ROW Only	6.0” High Definition	8 GB RAM / 128 GB ROM	2D imager advanced range (SE55) and integrated NFC	Android based, Google ™ Mobile Services (GMS)
TC5301-0T1K6E200A-NA	Premium LAN: WiFi 6E, 3.5 mm Headphone Jack, Time Of Flight, 8 MP FFC, 16 MP RFC W OIS, True Hot Swap, 4680 mAh Standard Battery, GMS, NA Only	6.0” High Definition	8 GB RAM / 128 GB ROM	2D imager advanced range (SE55) and integrated NFC	Android based, Google ™ Mobile Services (GMS)

Table 1 Configurations (Continued)

Configuration	Radios	Display	Memory	Data Capture Options	Operating System
TC5301-0T1K6E200B-NA	LAN: Certified Parcel Dim, For US, NTEP Certified, WiFi 6E, 3.5 mm Headphone Jack, Time Of Flight, 8 MP FFC, 16 MP RFC W OIS, True Hot Swap, 4680 mAh Standard Battery, GMS, US Only	6.0” High Definition	8 GB RAM / 128 GB ROM	2D imager advanced range (SE55) and integrated NFC	Android based, Google ™ Mobile Services (GMS)
TC5301-0T1K6E200C-A6	LAN: Certified Parcel Dim, For EFTA & EU Certified, WiFi 6E, 3.5 mm Headphone Jack, Time Of Flight, 8 MP FFC, 16 MP RFC W OIS, True Hot Swap, 4680 mAh Standard Battery, GMS, EU & EFTA Only	6.0” High Definition	8 GB RAM / 128 GB ROM	2D imager advanced range (SE55) and integrated NFC	Android based, Google ™ Mobile Services (GMS)
TC5301-0T1K6E200E-A6	LAN: Certified Parcel Dim, For Australia & New Zealand, AU Certified, WiFi 6E, 3.5 mm Headphone Jack, Time Of Flight, 8 MP FFC, 16 MP RFC W OIS, True Hot Swap, 4680 mAh Standard Battery, GMS, AU & NZ Only	6.0” High Definition	8 GB RAM / 128 GB ROM	2D imager advanced range (SE55) and integrated NFC	Android based, Google ™ Mobile Services (GMS)
TC5301-0T1K6E200F-A6	LAN: Certified Parcel Dim, For ROW, OIML Certified, WiFi 6E, 3.5 mm Headphone Jack, Time Of Flight, 8 MP FFC, 16 MP RFC W OIS, True Hot Swap, 4680 mAh Standard Battery, GMS, ROW Only	6.0” High Definition	8 GB RAM / 128 GB ROM	2D imager advanced range (SE55) and integrated NFC	Android based, Google ™ Mobile Services (GMS)
TC5301-0T1K7B1000-A6	LAN: WiFi 6E, 3.5 mm Headphone Jack, 8 MP FFC, 16 MP RFC, Warm Swap, 4680 mAh Standard Battery, GMS, ROW Only	6.0” High Definition	8 GB RAM / 64 GB ROM	2D imager advanced range (SE55) and integrated NFC	Android based, Google ™ Mobile Services (GMS)

Table 1 Configurations (Continued)

Configuration	Radios	Display	Memory	Data Capture Options	Operating System
TC5301-0T1K7B1000-NA	LAN: WiFi 6E, 3.5 mm Headphone Jack, 8 MP FFC, 16 MP RFC, Warm Swap, 4680 mAh Standard Battery, GMS, NA Only	6.0” High Definition	8 GB RAM / 64 GB ROM	2D imager advanced range (SE55) and integrated NFC	Android based, Google ™ Mobile Services (GMS)
TC5301-0T1K7B1B00-A6	LAN: WiFi 6E, 3.5 mm Headphone Jack, 8 MP FFC, 16 MP RFC, Warm Swap, 4680 mAh BLE Battery, GMS, ROW Only	6.0” High Definition	8 GB RAM / 64 GB ROM	2D imager advanced range (SE55) and integrated NFC	Android based, Google ™ Mobile Services (GMS)
TC5301-0T1K7B1B00-NA	LAN: WiFi 6E, 3.5 mm Headphone Jack, 8 MP FFC, 16 MP RFC, Warm Swap, 4680 mAh BLE Battery, GMS, NA Only	6.0” High Definition	8 GB RAM / 64 GB ROM	2D imager advanced range (SE55) and integrated NFC	Android based, Google ™ Mobile Services (GMS)
TC5301-0T1K7B1N00-NA	LAN: WiFi 6E, 3.5 mm Headphone Jack, 8 MP FFC, 16 MP RFC, Warm Swap, No Battery Provided, GMS, NA Only	6.0” High Definition	8 GB RAM / 64 GB ROM	2D imager advanced range (SE55) and integrated NFC	Android based, Google ™ Mobile Services (GMS)
TC5301-0T2K6B1000-CN	LAN: WiFi 6E, 3.5 mm Headphone Jack, 8 MP FFC, 16 MP RFC, Warm Swap, 4680 mAh Standard Battery, AOSP, China Only	6.0” High Definition	8 GB RAM / 128 GB ROM	2D imager advanced range (SE55) and integrated NFC	Android based, Google ™ Mobile Services (GMS)
TC58A1-3T1E4B1010-NA	WAN: 5G FR1, CBRS, WiFi 6E, 8 MP FFC, 16 MP RFC, Warm Swap, 4680 mAh Standard Battery, GMS, NA Only	6.0” High Definition	4 GB RAM / 64 GB ROM	2D imager (SE4720) and integrated NFC	Android based, Google ™ Mobile Services (GMS)
TC58A1-3T1E4B1E10-NA	WAN: 5G FR1, CBRS, WiFi 6E, 8 MP FFC, 16 MP RFC, Warm Swap, 7000 mAh Extended Battery, GMS, NA Only	6.0” High Definition	4 GB RAM / 64 GB ROM	2D imager (SE4720) and integrated NFC	Android based, Google ™ Mobile Services (GMS)

Table 1 Configurations (Continued)

Configuration	Radios	Display	Memory	Data Capture Options	Operating System
TC58A1-3T1E7B1010-NA	WAN: 5G FR1, WiFi 6E, 8 MP FFC, 16 MP RFC, Warm Swap, 4680 mAh Standard Battery, GMS, NA Only	6.0” High Definition	8 GB RAM / 64 GB ROM	2D imager (SE4720) and integrated NFC	Android based, Google ™ Mobile Services (GMS)
TC58A1-3T1K4B1010-NA	WAN: 5G FR1, CBRS, WiFi 6E, 8 MP FFC, 16 MP RFC, Warm Swap, 4680 mAh Standard Battery, GMS, NA Only	6.0” High Definition	4 GB RAM / 64 GB ROM	2D imager advanced range (SE55) and integrated NFC	Android based, Google ™ Mobile Services (GMS)
TC58A1-3T1K6B1010-NA	WAN: 5G FR1, CBRS, WiFi 6E, 8 MP FFC, 16 MP RFC, Warm Swap, 4680 mAh Standard Battery, GMS, NA Only	6.0” High Definition	8 GB RAM / 128 GB ROM	2D imager advanced range (SE55) and integrated NFC	Android based, Google ™ Mobile Services (GMS)
TC58A1-3T1K6E2A1A-NA	Premium WAN: 5G FR1, CBRS, WiFi 6E, Time Of Flight, 8 MP FFC, 16 MP RFC W OIS, True Hot Swap, 4680 mAh Standard Battery, GMS, NA Only	6.0” High Definition	8 GB RAM / 128 GB ROM	2D imager advanced range (SE55) and integrated NFC	Android based, Google ™ Mobile Services (GMS)
TC58A1-3T1K6E2A1B-NA	WAN: Certified Parcel Dim, For US, NTEP Certified, 5G FR1, CBRS, WiFi 6E, Time Of Flight, 8 MP FFC, 16 MP RFC W OIS, True Hot Swap, 4680 mAh Standard Battery, GMS, US Only	6.0” High Definition	8 GB RAM / 128 GB ROM	2D imager advanced range (SE55) and integrated NFC	Android based, Google ™ Mobile Services (GMS)
TC58A1-3T1K6E2A8D-NA	WAN: Certified Parcel Dim, For Canada, MC Certified, 5G FR1, WiFi 6E, Time Of Flight, 8 MP FFC, 16 MP RFC W OIS, True Hot Swap, 4680 mAh Standard Battery, GMS, Canada Only	6.0” High Definition	8 GB RAM / 128 GB ROM	2D imager advanced range (SE55) and integrated NFC	Android based, Google ™ Mobile Services (GMS)

Table 1 Configurations (Continued)

Configuration	Radios	Display	Memory	Data Capture Options	Operating System
TC58A1-3T1K7B1010-NA	WAN: 5G FR1, CBRS, WiFi 6E, Time Of Flight, 8 MP FFC, 16 MP RFC, Warm Swap, 4680 mAh Standard Battery, GMS, NA Only	6.0” High Definition	8 GB RAM / 64 GB ROM	2D imager advanced range (SE55) and integrated NFC	Android based, Google ™ Mobile Services (GMS)
TC58B1-3T1E1B1080-A6	WAN: 5G FR1, WiFi 6E, 8 MP FFC, 16 MP RFC, Warm Swap, 4680 mAh Standard Battery, GMS, ROW	6.0” High Definition	6 GB RAM / 64 GB ROM	2D imager (SE4720) and integrated NFC	Android based, Google ™ Mobile Services (GMS)
TC58B1-3T1E4B1080-A6	WAN: 5G FR1, WiFi 6E, 8 MP FFC, 16 MP RFC, Warm Swap, 4680 mAh Standard Battery, GMS, ROW	6.0” High Definition	4 GB RAM / 64 GB ROM	2D imager (SE4720) and integrated NFC	Android based, Google ™ Mobile Services (GMS)
TC58B1-3T1E4B1080-IN	WAN: 5G FR1, WiFi 6E, 8 MP FFC, 16 MP RFC, Warm Swap, 4680 mAh Standard Battery, GMS, India Only	6.0” High Definition	4 GB RAM / 64 GB ROM	2D imager (SE4720) and integrated NFC	Android based, Google ™ Mobile Services (GMS)
TC58B1-3T1E4B1080-TR	WAN: 5G FR1, WiFi 6E, 8 MP FFC, 16 MP RFC, Warm Swap, 4680 mAh Standard Battery, GMS, Voice & Data, Turkey Only	6.0” High Definition	4 GB RAM / 64 GB ROM	2D imager (SE4720) and integrated NFC	Android based, Google ™ Mobile Services (GMS)
TC58B1-3T1E4B1B80-A6	WAN: 5G FR1, WiFi 6E, 8 MP FFC, 16 MP RFC, Warm Swap, 4680 mAh BLE Battery, GMS, ROW	6.0” High Definition	4 GB RAM / 64 GB ROM	2D imager (SE4720) and integrated NFC	Android based, Google ™ Mobile Services (GMS)
TC58B1-3T1E4B1N80-A6	WAN: 5G FR1, WiFi 6E, 8 MP FFC, 16 MP RFC, Warm Swap, No Battery Included, GMS, ROW	6.0” High Definition	4 GB RAM / 64 GB ROM	2D imager (SE4720) and integrated NFC	Android based, Google ™ Mobile Services (GMS)
TC58B1-3T1E6B1080-A6	WAN: 5G FR1, WiFi 6E, 8 MP FFC, 16 MP RFC, Warm Swap, 4680 mAh Standard Battery, GMS, ROW	6.0” High Definition	8 GB RAM / 128 GB ROM	2D imager (SE4720) and integrated NFC	Android based, Google ™ Mobile Services (GMS)

Table 1 Configurations (Continued)

Configuration	Radios	Display	Memory	Data Capture Options	Operating System
TC58B1-3T1E6B1W80-A6	WAN: 5G FR1, WiFi 6E, 8 MP FFC, 16 MP RFC, Warm Swap, Wireless Charge, 4680 mAh Wireless Charge Battery, GMS, ROW	6.0” High Definition	8 GB RAM / 128 GB ROM	2D imager (SE4720) and integrated NFC	Android based, Google ™ Mobile Services (GMS)
TC58B1-3T1K4B1080-A6	WAN: 5G FR1, WiFi 6E, 8 MP FFC, 16 MP RFC, Warm Swap, 4680 mAh Standard Battery, GMS, ROW	6.0” High Definition	4 GB RAM / 64 GB ROM	2D imager advanced range (SE55) and integrated NFC	Android based, Google ™ Mobile Services (GMS)
TC58B1-3T1K4B1E80-A6	WAN: 5G FR1, WiFi 6E, 8 MP FFC, 16 MP RFC, Warm Swap, 7000 mAh Extended Battery, GMS, ROW	6.0” High Definition	4 GB RAM / 64 GB ROM	2D imager advanced range (SE55) and integrated NFC	Android based, Google ™ Mobile Services (GMS)
TC58B1-3T1K6B1080-A6	WAN: 5G FR1, WiFi 6E, 8 MP FFC, 16 MP RFC, Warm Swap, 4680 mAh Standard Battery, GMS, ROW	6.0” High Definition	8 GB RAM / 128 GB ROM	2D imager advanced range (SE55) and integrated NFC	Android based, Google ™ Mobile Services (GMS)
TC58B1-3T1K6B1080-IN	WAN: 5G FR1, WiFi 6E, 8 MP FFC, 16 MP RFC, Warm Swap, 4680 mAh Standard Battery, GMS, India Only	6.0” High Definition	8 GB RAM / 128 GB ROM	2D imager advanced range (SE55) and integrated NFC	Android based, Google ™ Mobile Services (GMS)
TC58B1-3T1K6B1080-TR	WAN: 5G FR1, WiFi 6E, 8 MP FFC, 16 MP RFC, Warm Swap, 4680 mAh Standard Battery, GMS, Voice & Data, Turkey Only	6.0” High Definition	8 GB RAM / 128 GB ROM	2D imager advanced range (SE55) and integrated NFC	Android based, Google ™ Mobile Services (GMS)
TC58B1-3T1K6E2A8A-A6	Premium WAN: 5G FR1, WiFi 6E, Time Of Flight, 8 MP FFC, 16 MP RFC W OIS, True Hot Swap, 4680 mAh Standard Battery, GMS, ROW	6.0” High Definition	8 GB RAM / 128 GB ROM	2D imager advanced range (SE55) and integrated NFC	Android based, Google ™ Mobile Services (GMS)

Table 1 Configurations (Continued)

Configuration	Radios	Display	Memory	Data Capture Options	Operating System
TC58B1-3T1K6E2A8C-A6	WAN: Certified Parcel Dim, For EFTA & EU Certified, 5G FR1, WiFi 6E, Time Of Flight, 8 MP FFC, 16 MP RFC W OIS, True Hot Swap, 4680 mAh Standard Battery, GMS, EU & EFTA Only	6.0” High Definition	8 GB RAM / 128 GB ROM	2D imager advanced range (SE55) and integrated NFC	Android based, Google ™ Mobile Services (GMS)
TC58B1-3T1K6E2A8E-A6	WAN: Certified Parcel Dim, For Australia & New Zealand, AU Certified, 5G FR1, WiFi 6E, Time Of Flight, 8 MP FFC, 16 MP RFC W OIS, True Hot Swap, 4680 mAh Standard Battery, GMS, AU & NZ Only	6.0” High Definition	8 GB RAM / 128 GB ROM	2D imager advanced range (SE55) and integrated NFC	Android based, Google ™ Mobile Services (GMS)
TC58B1-3T1K6E2A8F-A6	WAN: Certified Parcel Dim, For ROW, OIML Certified, 5G FR1, WiFi 6E, Time Of Flight, 8 MP FFC, 16 MP RFC W OIS, True Hot Swap, 4680 mAh Standard Battery, GMS, ROW Only	6.0” High Definition	8 GB RAM / 128 GB ROM	2D imager advanced range (SE55) and integrated NFC	Android based, Google ™ Mobile Services (GMS)
TC58B1-3T1K6E2W8A-A6	Premium WAN: 5G FR1, WiFi 6E, Time Of Flight, 8 MP FFC, 16 MP RFC W OIS, True Hot Swap, 4680 mAh Wireless Charge Battery, GMS, ROW	6.0” High Definition	8 GB RAM / 128 GB ROM	2D imager advanced range (SE55) and integrated NFC	Android based, Google ™ Mobile Services (GMS)
TC58B1-3T1K6E2W8A-TR	Premium WAN: 5G FR1, WiFi 6E, Time Of Flight, 8 MP FFC, 16 MP RFC W OIS, True Hot Swap, 4680 mAh Wireless Charge Battery, GMS, Turkey	6.0” High Definition	8 GB RAM / 128 GB ROM	2D imager advanced range (SE55) and integrated NFC	Android based, Google ™ Mobile Services (GMS)

Table 1 Configurations (Continued)

Configuration	Radios	Display	Memory	Data Capture Options	Operating System
TC58B1-3T1K7B1080-A6	WAN: 5G FR1, WiFi 6E, 8 MP FFC, 16 MP RFC, Warm Swap, 4680 mAh Standard Battery, GMS, ROW	6.0” High Definition	8 GB RAM / 64 GB ROM	2D imager advanced range (SE55) and integrated NFC	Android based, Google ™ Mobile Services (GMS)

Notational Conventions

The following notational conventions make the content of this document easy to navigate.

- **Bold** text is used to highlight the following:
  - Dialog box, window, and screen names
  - Dropdown list and list box names
  - Checkbox and radio button names
  - Icons on a screen
  - Key names on a keypad
  - Button names on a screen
- Bullets (•) indicate:
  - Action items
  - List of alternatives
  - Lists of required steps that are not necessarily sequential
- Sequential lists (for example, those that describe step-by-step procedures) appear as numbered lists.

Icon Conventions

The documentation set is designed to give the reader more visual clues. The following visual indicators are used throughout the documentation set.

NOTE: The text here indicates information that is supplemental for you to know and that is not required to complete a task.

IMPORTANT: The text here indicates information that is important for you to know.

CAUTION: If the precaution is not heeded, you could receive a minor or moderate injury.

WARNING: If danger is not avoided, you CAN be seriously injured or killed.

DANGER: If danger is not avoided, you WILL be seriously injured or killed.

Service Information

If you have a problem with your equipment, contact Zebra Global Customer Support for your region. Contact information is available at: zebra.com/support.

When contacting support, please have the following information available:

- Serial number of the unit
- Model number or product name
- Software/firmware type and version number

Zebra responds to calls by email, telephone, or fax within the time limits set forth in support agreements.

If your problem cannot be solved by Zebra Customer Support, you may need to return your equipment for servicing and will be given specific directions. Zebra is not responsible for any damages incurred during shipment if the approved shipping container is not used. Shipping the units improperly can possibly void the warranty.

If you purchased your Zebra business product from a Zebra business partner, contact that business partner for support.

NFC Wayfinding System Disclosure Statement

All uses of the NFC Wayfinding System require the execution of the NFC Forum Wayfinding Mark Trademark License Agreement.

This click-through license and all creative assets are available on the NFC Forum website at nfc-forum.org.

The license agreement for the NFC Wayfinding System provides limited indemnification for licensed users of the marks in those jurisdictions where it is registered. Licensed users are not shielded from liability in jurisdictions where the marks are not registered or in connection with products or services not specified in the registration of that jurisdiction. For a complete list of registered jurisdictions, please contact the NFC Forum.

The NFC Forum registered N-Mark is a separate mark with a different license and terms. Please visit the NFC Forum website for additional details.

Determining Software Versions

Before contacting Customer Support, determine the current software version on your device.

1. Swipe down from the Status bar with two fingers to open the Quick Access panel, and then touch ⚙.
2. Touch **About phone**.

3. Scroll to view the following information:
   - Status
   - Battery information
   - Emergency information
   - SW components
   - Legal information
   - Model & hardware
   - Model
   - Android version
     - Android security patch level
     - Android security patch version
     - Google Play system update
     - Baseband version
     - Kernel version
     - Build Fingerprint
     - Build number
     - Android Security Update

   To determine the device IMEI information (WWAN only), touch **About phoneIMEI**:
   - **IMEI** - Displays the IMEI number for the device.
   - **IMEI SV** - Displays the IMEI software version (SV) number for the device.

Determining the Serial Number

Before contacting Customer Support, determine the serial number of your device.

- Swipe down from the Status bar with two fingers to open the Quick Access panel, and then touch ⚙.
- Touch **About phone**.
- Touch **Status**.
- Touch **Model & hardware**.
- Touch **Serial number**.

Getting Started

This section provides information for getting the device up and running for the first time.

Unpacking the Device

Unpacking the device from the box.

1. Carefully remove all protective material from the device and save the shipping container for later storage and shipping.
2. Verify that the following were received:
   - Touch computer
   - ≥17.7 Watt hours (min) / ≥4680 mAh PowerPrecision+ Lithium-ion battery
   - Regulatory Guide.
3. Inspect the equipment for damage. If any equipment is missing or damaged, contact the Global Customer Support center immediately.
4. Prior to using the device for the first time, remove the protective shipping film that covers the scan window, display and camera window.

Features

This section lists the features of the TC53 touch computer.

Figure 1 Front and Side Views

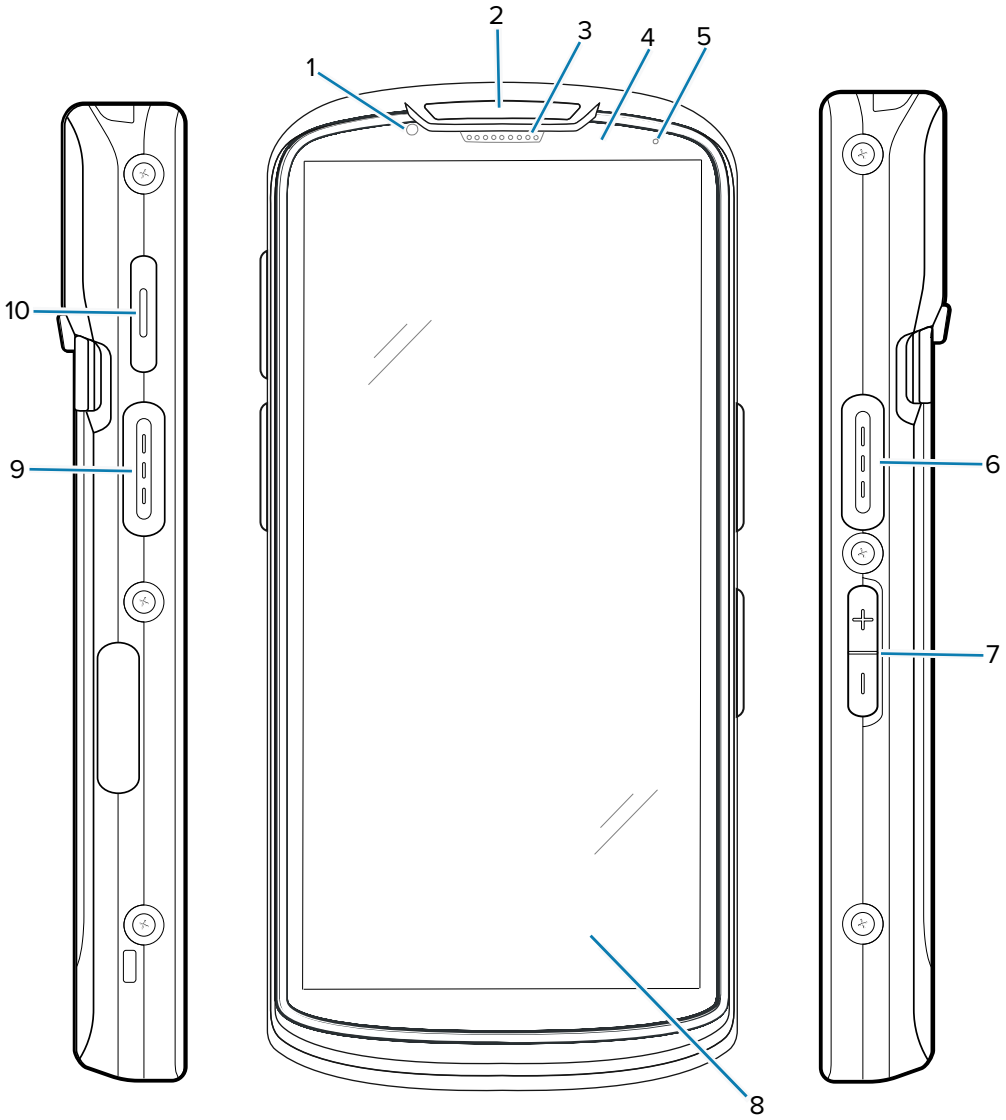

Table 2 TC53 Front View

Number	Item	Description
1	Front camera 8MP	Takes photos and videos.
2	Scan LED	Indicates data capture status.
3	Receiver	Use for audio playback in Handset mode.
4	Proximity/light sensor	Determines proximity and ambient light for controlling display backlight intensity.

Table 2 TC53 Front View (Continued)

Number	Item	Description
5	Battery status LED	Indicates battery charging status while charging and application generated notifications.
6, 9	Scan button	Initiates data capture (programmable).
7	Volume up/down button	Increase and decrease audio volume (programmable).
8	6 in. LCD touch screen	Displays all information needed to operate the device.
10	PTT button	Typically used for PTT communications. Where regulatory restrictions exist[1], button is configurable for use with other applications.
[1]Pakistan, Qatar		

Figure 2 Back, Top, and Bottom View

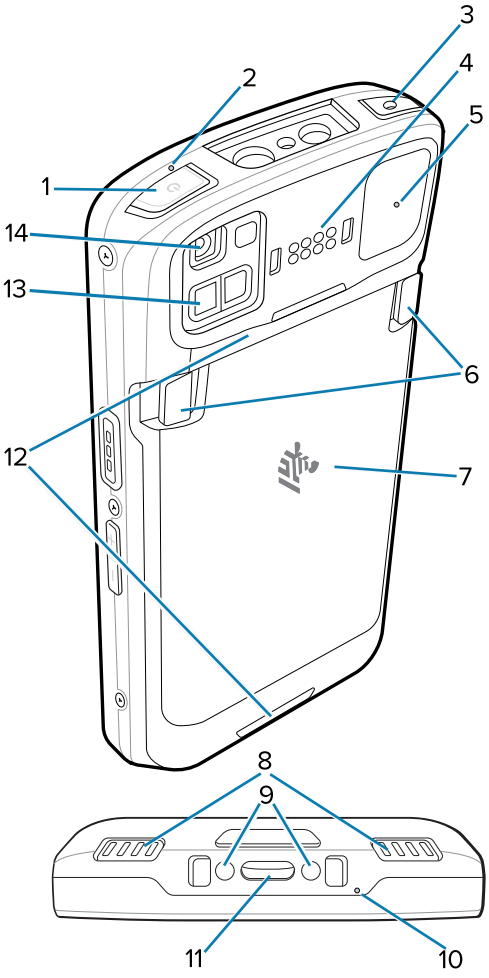

Table 3 TC53 Rear View

Number	Item	Description
1	Power button	Turns the display on and off. Press and hold to reset the device, power off or swap battery.
2, 5, 10	Microphone	Use for communications in Handset/Handsfree mode, audio recording, and noise cancellation.
3	Headset jack	For audio output to headset (TC53 only).
4	Back common I/O 8 pins	Provides host communications, audio and device charging via cables and accessories.
6	Battery release latches	Pinch both latches in and lift up to remove the battery.
7	Battery	Provides power to the device.
8	Speaker	Provides audio output for video and music playback. Provides audio in speakerphone mode.
9	DC input pins	Power/ground for charging (5V through 9V).
11	USB Type C and 2 charge pins	Provides power to the device using I/O USB-C interface with 2 charge pins.
12	Hand strap attachment points	Attachment points for the hand strap.
13	ToF module	Employs time of flight techniques to resolve distance between the camera and subject (premium configurations only).
14	16 MP rear camera with flash	Takes photos and videos with flash to provide illumination for the camera.

Setting Up the Device

To start using the device for the first time.

1. Install a nano SIM card. (TC58 Only)
2. Install a micro Secure Digital (SD) card (optional).
3. Install hand strap (optional).
4. Install the battery.
5. Charge the device.
6. Power on the device.

Installing a microSD Card

The microSD card slot provides secondary non-volatile storage. The slot is located under the battery pack. Refer to the documentation provided with the card for more information, and follow the manufacturer's recommendations for use.

CAUTION—ESD: Follow proper electrostatic discharge (ESD) precautions to avoid damaging the microSD card. Proper ESD precautions include, but are not limited to, working on an ESD mat and ensuring the operator is properly grounded.

1. Lift the access door.

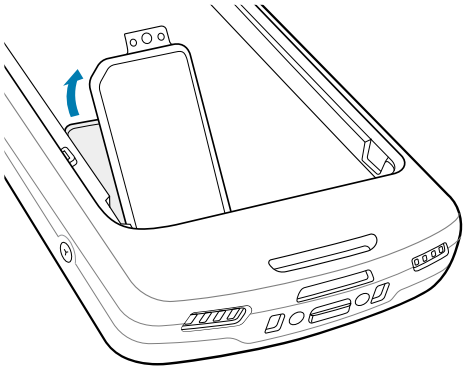

2. Slide the microSD card holder to the Open position.

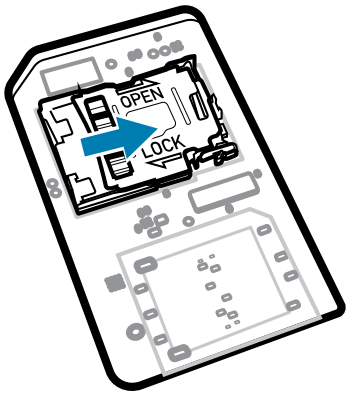

3. Lift the microSD card holder door.

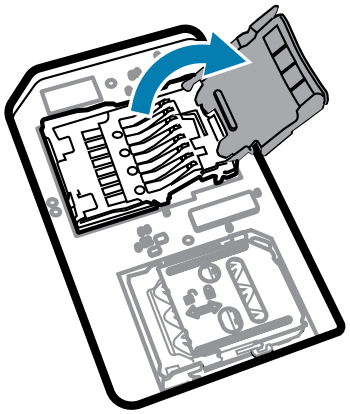

4. Insert the microSD card into the card holder ensuring that the card slides into the holding tabs on each side of the door.

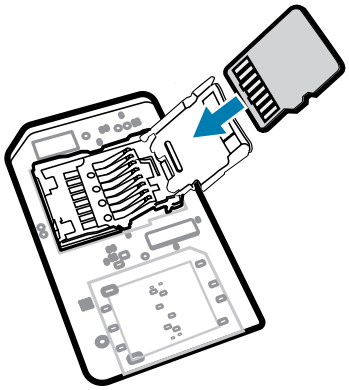

5. Close the microSD card holder door.

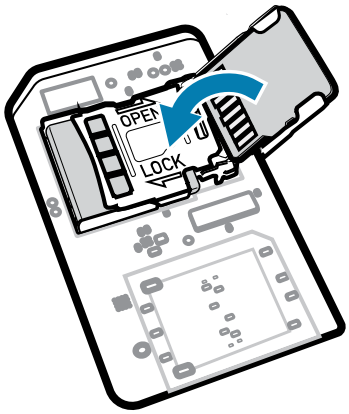

6. Slide the microSD card holder door to the Lock position.

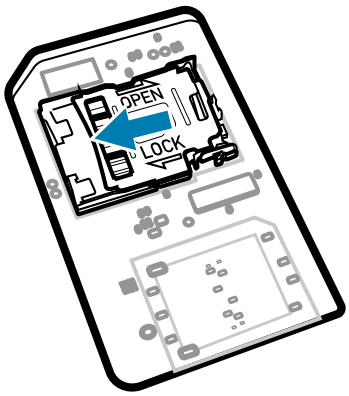

NOTE: Access door must be replaced and securely seated to ensure proper device sealing.

7. Re-install the access door.

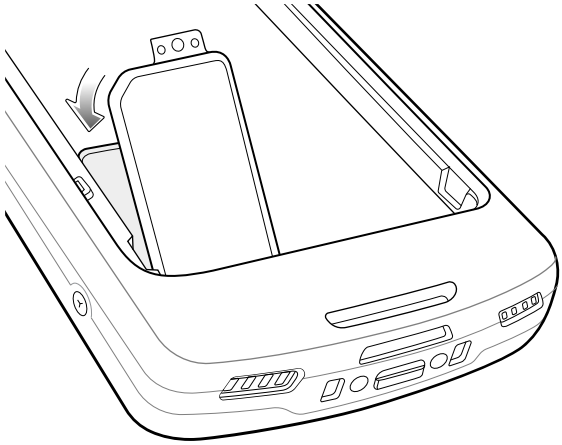

Installing the SIM Card

CAUTION: Follow proper electrostatic discharge (ESD) precautions to avoid damaging the microSD card. Proper ESD precautions include, but are not limited to, working on an ESD mat and ensuring the operator is properly grounded.

1. Remove the access cover.

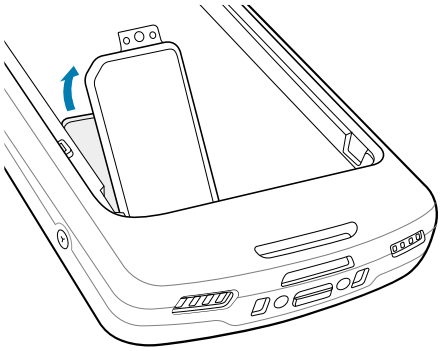

2. Slide the SIM card holder to the unlock position.

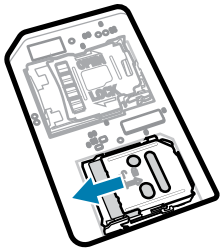

3. Lift the SIM card holder door.

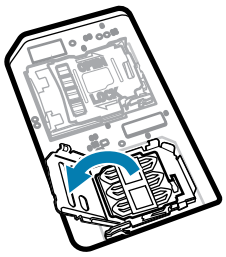

4. Place the SIM card into the card holder with contacts facing down.

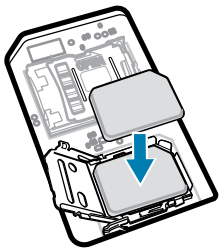

5. Close the SIM card holder door.

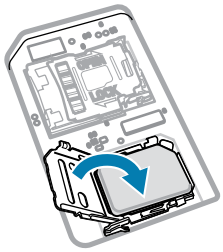

6. Slide to SIM card holder door to the lock position.

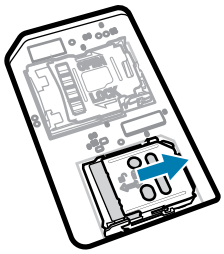

NOTE: Access door must be replaced and securely seated to ensure proper device sealing.

7. Reinstall the access door.

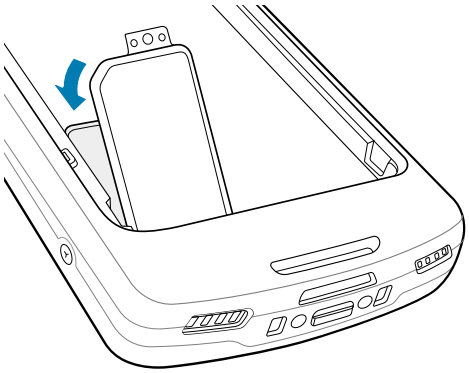

Installing the Battery

This section describes how to install the battery into the device.

NOTE: User modification of the device, particularly in the battery well, such as labels, asset tags, engravings, stickers, etc., may compromise the intended performance of the device or accessories. Performance levels such as sealing (Ingress Protection (IP)), impact performance (drop and tumble), functionality, temperature resistance, etc. could be affected. DO NOT put any labels, asset tags, engravings, stickers, etc. in the battery well.

1. Insert the battery, bottom first, into the battery compartment in the back of the device.
2. Press the battery down until it snaps into place.

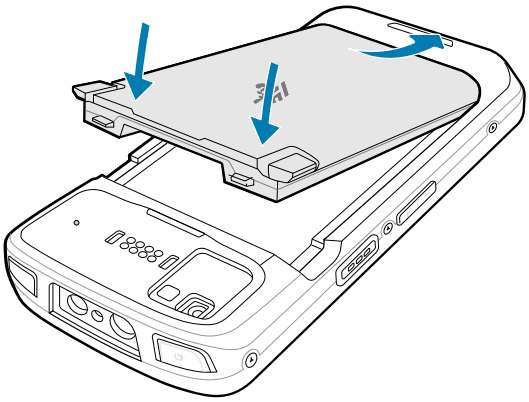

Using the Rechargeable Li-Ion Battery with BLE Beacon

This device utilizes a rechargeable Li-Ion battery to facilitate BLE Beacon. Once enabled, the battery transmits a BLE signal for up to seven days while the device is powered off due to battery depletion.

NOTE: The device transmits a Bluetooth beacon only when the device is powered off or in Airplane Mode.

For additional information on configuring the Secondary BLE settings, see techdocs.zebra.com/emdk-for-android/11-0/mx/beaconmgr/.

Using the Rechargeable Li-Ion Wireless Battery

This device utilizes a rechargeable Li-Ion battery to facilitate wireless charging.

NOTE: The rechargeable Li-Ion wireless battery must be used along with the terminal in the Zebra Wireless Charge Vehicle Cradle or Qi certified wireless chargers.

Charging the Battery

Before using the device for the first time, charge the main battery until the green Charging/Notification light emitting diode (LED) remains lit. To charge the device use a cable or a cradle with the appropriate power supply.

For information about the accessories available for the device see Accessories. The battery charges from fully depleted to 90% in approximately 2 hours.

Charge batteries in temperatures from 0°C to 50°C (32°F to 122°F). The device or accessory always performs battery charging in a safe and intelligent manner. At temperatures below 20°C (-4°F) or above 45°C (113°F), charging slows to optimize the JEITA requirements of the cell. Charging stops when the temperature is below 0°C (32°F) or above 50°C (122°F). The device shuts down at 58°C (136°F). The device or accessory indicates when charging is disabled due to abnormal temperatures via its LED and a notification appears on the display.

To charge the main battery:

1. Connect the charging accessory to the appropriate power source.
2. Insert the device into a cradle or attach to a powered cable (min. 9V/ 2 Amps). The device turns on and begins charging. The Charging/Notification LED blinks amber while charging, then turns solid green when fully charged.

Charging Indications

The charging/notification LED indicates charging status.

Table 4 Charging/Notification LED Charging Indicators

State	LED	Indications
Off		Device is not charging. Device is not inserted correctly in the cradle or connected to a power source. Charger/cradle is not powered.
Slow Blinking Amber (1 blink every 4 seconds)		Device is charging.
Slow Blinking Red (1 blink every 4 seconds)		Device is charging but the battery is at end of useful life.
Solid Green		Charging complete.
Solid Red		Charging complete but the battery is at end of useful life.

Table 4 Charging/Notification LED Charging Indicators (Continued)

State	LED	Indications
Fast Blinking Amber (2 blinks/second)		Charging error, e.g.: • Temperature is too low or too high. • Charging has gone on too long without completion (typically twelve hours).
Fast Blinking Red (2 blinks/second)		Charging error but the battery is at end of useful life., e.g.: • Temperature is too low or too high. • Charging has gone on too long without completion (typically twelve hours).

Replacing the Battery

Replacing the battery in the TC53 and TC58 devices.

NOTE: User modification of the device, particularly in the battery well, such as labels, asset tags, engravings, stickers, etc., may compromise the intended performance of the device or accessories. Performance levels such as sealing (Ingress Protection (IP)), impact performance (drop and tumble), functionality, temperature resistance, etc. could be effected. DO NOT put any labels, asset tags, engravings, stickers, etc. in the battery well.

CAUTION: Do not add or remove microSD card during battery replacement.

1. Press the Power button until the menu appears.
2. Touch **Battery Swap**.
3. Follow the on-screen instructions.

WARNING: Do not remove the battery until after the red LED completely turns off. Loss of data may result.

4. Wait for the red LED to completely turn off.
5. If hand strap is attached, remove hand strap.

6. Press the two battery latches down.

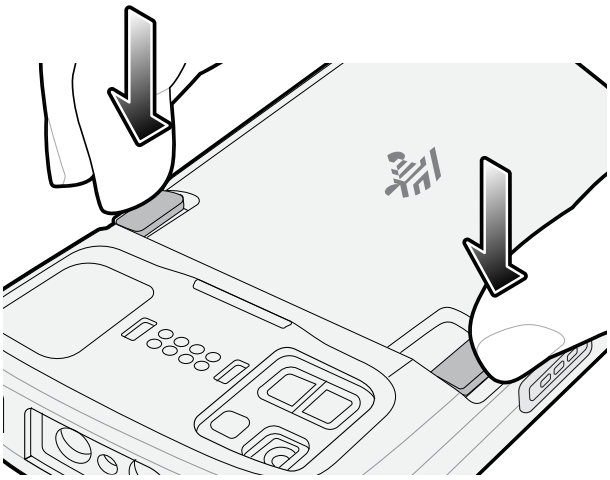

CAUTION: Do not attempt to insert fingers under the latches when pulling on the battery. Damage to the latches may occur.

7. While pressing the latches down, press the two latches in toward the center of the device. The latches must be pressed in completely to release the battery.

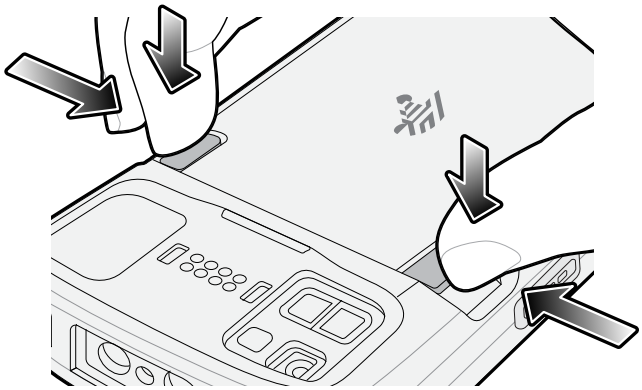

8. Lift the battery from the device.

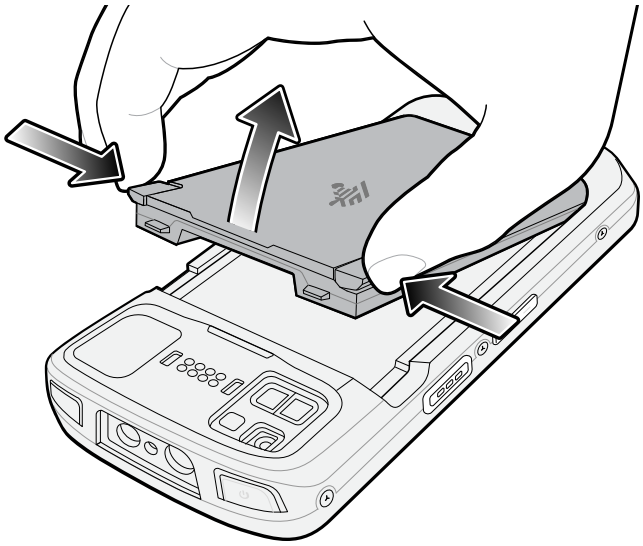

CAUTION: TC53 (Non-Premium device) - Has a power menu option to swap the battery. Replace the battery within 60 seconds. The memory is persisted.

TC58 - Does not have the power menu option. The device is active (including the display/touch) for the first 30 seconds and then the device enters Memory Persistence Mode for at least 60 seconds. If the battery is not replaced within this time (30 seconds True Hot Swap plus 60 seconds Memory Persistence Mode), a reboot (by pressing power button) of the device may be necessary.

NOTE: Battery True Hot Swap is available on TC53/TC58 Premium devices only.

9. Insert the replacement battery, bottom first, into the battery compartment in the back of the device.
10. Press the battery down until the battery release latches snap into place.
11. Replace the hand strap, if required.
12. Press the Power button to turn on the device.

Replacing the microSD Card

Use these procedures to replace a microSD card

To replace the microSD card:

1. Press the Power button until the menu appears.
2. Touch **Power off** .
3. Touch **OK**.
4. If hand strap is attached, slide the hand strap clip up toward the top of the device and then lift.
5. Press the two battery latches in.
6. Lift the battery from the device.

7. Lift the access door.

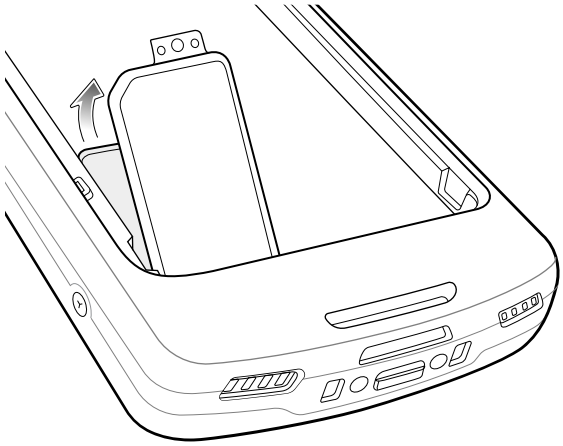

8. Remove microSD card from the holder.
9. Insert the replacement microSD card.

CAUTION: Access door must be replaced and securely seated to ensure proper device sealing.

10. Replace the access door.

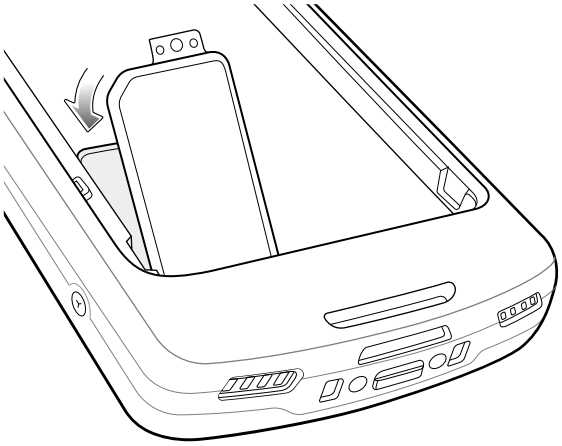

11. Insert the battery, bottom first, into the battery compartment in the back of the device.
12. Press the battery down until the battery release latches snap into place.
13. Replace the hand strap, if required.
14. Press and hold the Power button to turn on the device.

Replacing the SIM Card

Use these procedures to replace a SIM card.

NOTE: User modification of the device, particularly in the battery well, such as labels, asset tags, engravings, stickers, etc., may compromise the intended performance of the device or

accessories. Performance levels such as sealing (Ingress Protection (IP)), impact performance (drop and tumble), functionality, temperature resistance, etc. could be effected. DO NOT put any labels, asset tags, engravings, stickers, etc. in the battery well.

To replace the SIM card:

1. Press the Power button until the menu appears.
2. Touch **Power off**.
3. Touch **OK**.
4. If hand strap is attached, slide the hand strap clip up toward the top of the device and then lift.
5. Press the two battery latches in.
6. Lift the battery from the device.
7. Lift the access door.

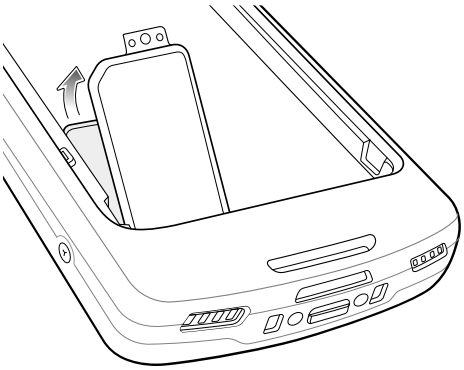

8. Slide the SIM card door to the unlock position.
9. Lift the SIM card holder door.
10. Remove the SIM card.
11. Place the new SIM card into the card holder with contacts facing down.
12. Close the SIM card holder.
13. Slide the SIM card holder door to the lock position.

CAUTION: Access door must be replaced and securely seated to ensure proper device sealing.

14. Replace the access door.

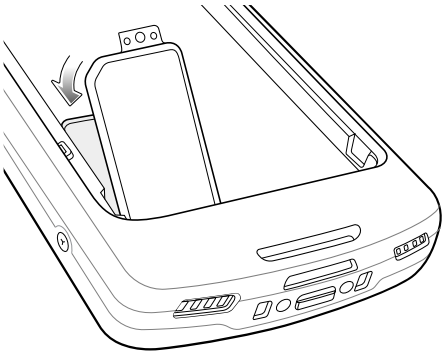

15. Insert the battery, bottom first, into the battery compartment in the back of the device.
16. Press the battery down until the battery release latch snaps into place.
17. Replace the hand strap, if required.
18. Press and hold the Power button to turn on the device.

Using the Device

This section explains how to use your device.

Home Screen

Turn on the device to display the Home screen. Depending on how your system administrator configured your device, your Home screen may appear differently than the graphics in this section.

After the device goes into Sleep mode, the Home screen displays with the lock slider. Touch the screen and slide up to unlock. The Home screen provides four additional screens to place widgets and shortcuts. Swipe the screen left or right to view the additional screens.

NOTE: By default, AOSP devices do not have the same icons on the Home screen as GMS devices. Icons are shown below for example only.

Home screen icons can be configured by the user and may look different than shown.

Figure 3 Android 11 Home Screen

Figure 4 Android 13 Home Screen

1	Status bar	Displays the time, status icons (right side), and notification icons (left side).
2	Widgets	Launches stand-alone apps that run on the Home screen.
3	Shortcut icons	Opens apps installed on the device.
4	Folder	Contains apps.
5	Back	Displays the previous screen.
6	Home	Displays the home screen.

7	Recent	Displays recently used applications.

Setting the Home Screen Rotation

By default, the Home screen rotation is disabled.

NOTE: Auto-rotate must be enabled in the Quick Access panel or in Settings before the Home Screen Rotation setting can be used.

1. Touch and hold anywhere on the Home screen until the options appear.
2. Touch **Home settings**.
3. Touch the **Allow Home screen rotation** switch.
4. Touch **Home**.
5. Rotate the device.

Status Bar

The Status bar displays the time, notification icons on the left side, and status icons on the right side.

If there are more notifications than can fit in the Status bar, a dot displays, indicating that more notifications exist. Swipe down from the Status bar to open the Notification panel and view all notifications and status icons.

Figure 5 Notifications and Status Icons

1	Notification icons
2	Status icons

Notifications Icons

Notification icons indicate app events and messages.

Table 5 Notification Icons

Icon	Description
	The main battery is low.
	Backup battery is not ready for Hot Swap.
	More notifications are available for viewing.

Table 5 Notification Icons (Continued)

Icon	Description
	Data is synching.
	Indicates an upcoming event. AOSP devices only.
	Indicates an upcoming event. GMS devices only.
	An Open Wi-Fi network is available. The device is not connected to it.
	Audio is playing.
	A problem with sign-in or sync has occurred.
	The device is uploading data.
	Animated: the device is downloading data. Static: the download is complete.
	The device is connected to or disconnected from a virtual private network (VPN).
	Preparing internal storage by checking it for errors.
	USB debugging is enabled on the device.
	Call is in progress (WWAN only).
	The mailbox contains one or more voice message (WWAN only).
	A call is on hold (WWAN only).
	A call was missed (WWAN only).
	A wired headset with a boom module is connected to the device.
	A wired headset without a boom module is connected to the device.

Table 5 Notification Icons (Continued)

Icon	Description
	PTT Express Voice client status.
	The RxLogger app is running.
	A Bluetooth scanner is connected to the device.
	A ring scanner is connected to the device in HID mode.

Status Icons

Status icons display system information for the device.

Table 6 Status Icons

Icon	Description
	Alarm is active.
	Main battery is fully charged.
	Main battery is partially drained.
	Main battery charge is low.
	Main battery charge is very low.
	Main battery is charging.
	All sounds, except media and alarms, are muted. Vibrate mode is active.
	Do Not Disturb mode active.
	Airplane Mode is active. All radios are turned off.
	Bluetooth is on.

Table 6 Status Icons (Continued)

Icon	Description
	The device is connected to a Bluetooth device.
	Connected to a Wi-Fi network. Indicates the Wi-Fi version number.
	Not connected to a Wi-Fi network or no Wi-Fi signal.
	Connected to an Ethernet network.
	Speakerphone enabled.
	Portable Wi-Fi hotspot is active (WWAN only).
	Connect to a 6E network (WWAN only).[a]
	Connect to a 5G network (WWAN only).[a]
4G LTE	Connected to a 4G LTE/LTE-CA network (WWAN only).[a]
4G	Connected to a DC-HSPA, HSDPA, HSPA+, HSUPA, LTE/LTE-CA or WCMDMA network (WWAN only).[a]
3G	Connected to a 1x-RTT (Sprint), EGDGE, EVDO, EVDV or WCDMA network (WWAN only).[a]
2G	Connected to a GPRS network (WWAN only).[a]
3G	Connected to a WCDMA network (WWAN only).[a]
H	Connected to a DC - HSPA, HSDPA, HSPA+ or HSUPA network (WWAN only).[a]
E	Connected to an EDGE network (WWAN only).[a]
G	Connected to a GPRS network (WWAN only).[a]
1X	Connected to a 1x-RTT (Verizon) network (WWAN only).[a]
R	Roaming from a network (WWAN only).

Table 6 Status Icons (Continued)

Icon	Description
	No SIM card installed (WWAN only).

Managing Notifications

Notification icons report the arrival of new messages, calendar events, alarms, and ongoing events. When a notification occurs, an icon appears in the Status bar with a brief description.

Figure 6 Android 11 Notification Panel

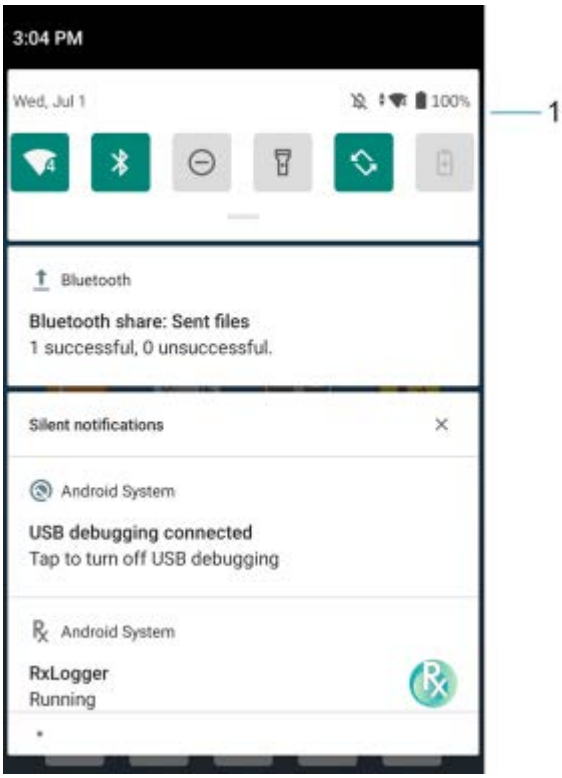

Figure 7 Android 13 Notification Panel

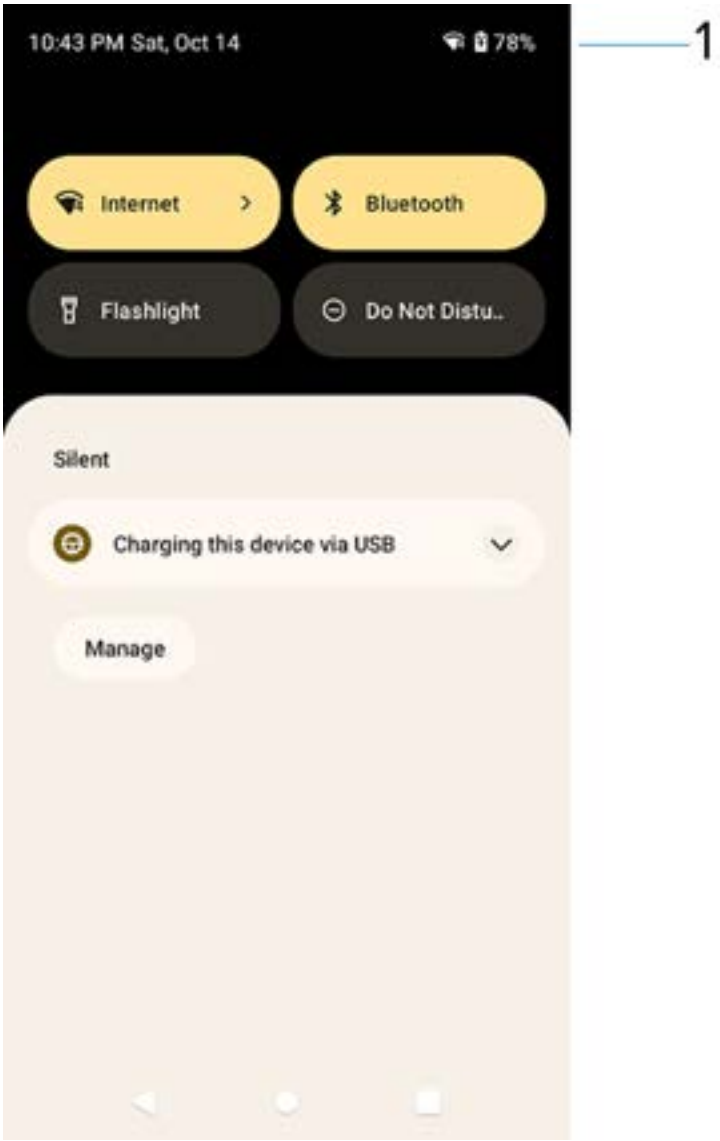

1	Quick settings bar

- To view a list of all notifications, open the Notification panel by dragging the Status bar down from the top of the screen.
- To respond to a notification, open the Notification panel and then touch a notification. The Notification panel closes and the corresponding app opens.
- To manage recent or frequently used notifications, open the Notification panel and then touch Manage notifications. Touch the toggle switch next to an app to turn off all notifications, or touch an app for more notification options.
- To clear all notifications, open the Notification panel and then touch **Clear all**. All event-based notifications are removed. Ongoing notifications remain in the list.
- To close the Notification panel, swipe the Notification panel up.

Opening the Quick Access Panel

Use the Quick Access panel to access frequently used settings (for example, Airplane mode).

NOTE: Not all icons are pictured. Icons may vary.

Figure 8 Android 11 Quick Access Panel

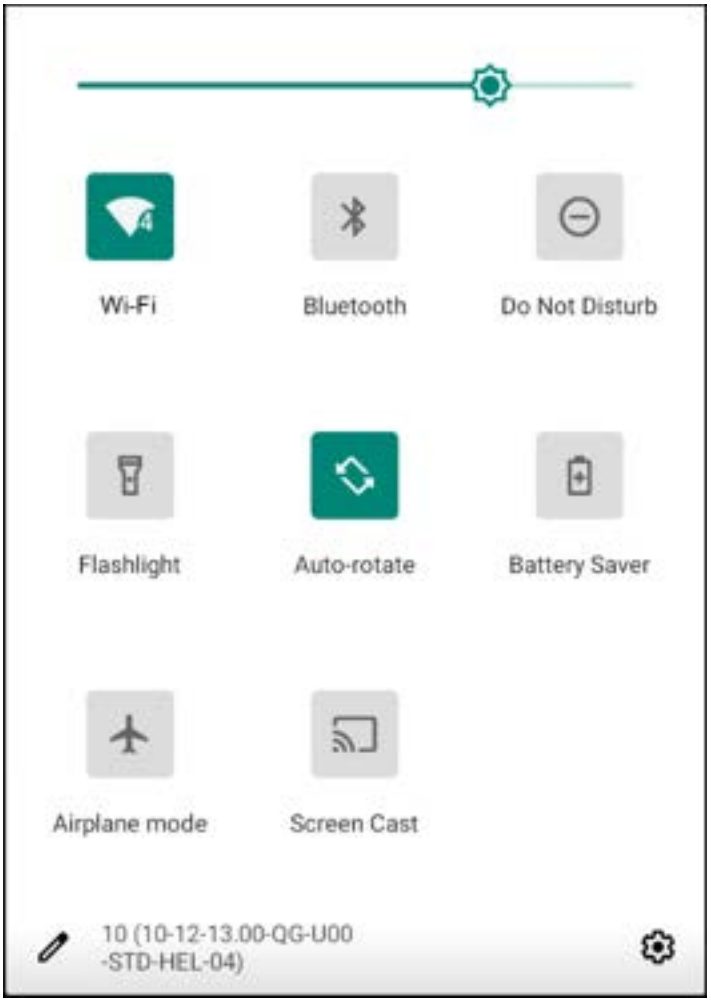

Figure 9 Android 13 Quick Access Panel

- If the device is locked, swipe down once.
- If the device is unlocked, swipe down once with two fingers, or twice with one finger.
- If the Notification panel is open, swipe down from the Quick Settings bar.

Quick Access Panel Icons

Quick Access panel icons indicate frequently used settings (for example, Airplane mode).

Table 7 Quick Access Panel Icons

Icon	Description
	Display brightness - Use the slider to decrease or increase the brightness of the screen. (Android 11 only)
	Display brightness - Use the slider to decrease or increase the brightness of the screen. (Android 13 only)
	Internet/Wi-Fi network - Turn Wi-Fi on or off. To open Wi-Fi settings, touch the Wi-Fi network name.
	Bluetooth settings - Turn Bluetooth on or off. To open Bluetooth settings, touch Bluetooth.
	Battery saver - Turn Battery saver mode on or off. When Battery saver mode is on the performance of the device is reduced to preserve battery power (not applicable).
	Invert colors - Invert the display colors.
	Do not disturb - Control how and when to receive notifications.
	Mobile data - Enables or disables data transfer via the WAN. The device is still available for voice calls and texts. To open Mobile data settings, touch and hold (WWAN only).
	Airplane mode - Turn Airplane mode on or off. When Airplane mode is on the device does not connect to Wi-Fi or Bluetooth.
	Auto-rotate - Lock the device's orientation in portrait or landscape mode or set to automatically rotate.
	Flashlight - Turn the flashlight or camera flash on or off. When the flashlight is activated, it stays on unless it is turned off or the camera app is run.
	Location - Enable or disable locationing feature.
	Hotspot - Turn on to share the device's mobile data connection with other devices.
	Data saver - Turn on to prevent some apps from sending or receiving data in the background.

Table 7 Quick Access Panel Icons (Continued)

Icon	Description
	Night light - Tint the screen amber to make it easier to look at the screen in dim light. Set Night Light to turn on automatically from sunset to sunrise, or at other times.
	Screen cast - Share phone content on Chromecast or a television with Chromecast built-in. On the Cast screen, check the "enable wireless display" option, and then touch "cast screen" to display a list of devices. Touch a device in the list to begin casting.
	Nearby share - Helps find and interact with services and devices close to the device.
	Dark theme - Toggles dark theme on and off. Dark themes reduce the luminance emitted by the screen, while meeting minimum color contrast ratios. It helps improve visual ergonomics by reducing eye strain, adjusting brightness to current lighting conditions, and facilitating screen use in dark environments, while conserving battery power.
	Focus mode - Turn on to pause distracting apps. To open Focus mode settings, touch and hold.
	Bedtime mode - Turn grayscale on and off. Grayscale turns the screen black and white, reducing phone distractions and improving battery life.
	Screen record - Makes a video recording of everything that happens on the screen, with options to include audio and screen touches.
	NFC - Enable or disable NFC communication.
	Wallet - Opens Android wallet. (Android 13 only)
	Scan QR code - Opens the camera app for QR code reading. (Android 13 only)
	Extra dim - Reduces screen brightness up to 50%. (Android 13 only)
	Color correction - Enable to help your device compensate for color blindness. (Android 13 only)
	Live caption - Enables captions to appear for any media playing, regardless of the device's volume level. (Android 13 only)
	Calculator - Open the calculator app. (Android 13 only)

Editing the Quick Access Tiles

The first four setting tiles from the Quick Access panel become the Quick Access tiles on the Notification panel.

Figure 10 Notification Panel

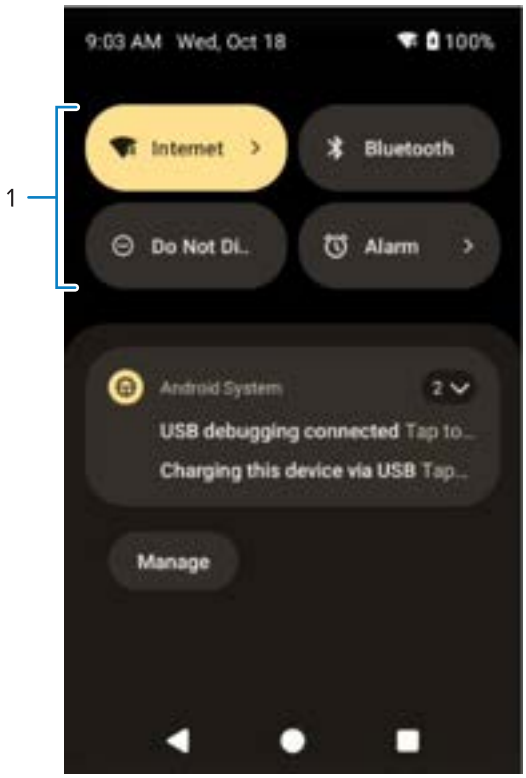

1	Quick access tiles

- Open the Quick Access panel and touch ✎ to edit, add, or remove settings tiles.

Battery Management

Observe the recommended battery optimization tips for the device.

- Set the screen to turn off after a short period of inactivity.
- Reduce screen brightness.
- Turn off all wireless radios when not in use.
- Turn off automatic syncing for Email, Calendar, Contacts, and other apps.
- Minimize the use of apps that keep the device from sleeping, for example, music and video apps.

NOTE: Before checking the battery charge level, remove the device from any AC power source (cradle or cable).

Low Battery Notification

When the battery charge level drops below the charge level in the table below, the device displays a notice to connect the device to power. Charge the battery using one of the charging accessories.

Table 8 Low Battery Notification

Charge Level Drops Below	Action
18%	You should charge the battery soon.
10%	You must charge the battery.
4%	The device turns off. You must charge the battery.

Battery True Hot Swap

NOTE: Battery True Hot Swap is available on TC53/TC58 Premium devices only.

Replacing the Main Battery using the True Hot Swap feature allows the device to maintain Wi-Fi\WAN connectivity and memory persistence while replacing the depleted battery with a fully charged battery. When the battery is removed, the backup super capacitor immediately takes over to maintain the system, including Wi-Fi\WAN connectivity (only voice, data and current state of applications) for a maximum of 30 seconds. During this time, the user is still able to interact with the device, however, some mitigations, such as dimming the display backlight, disabling the scanner, disabling NFC, and lowering the volume are made to conserve power consumption. After this period, the device enters emergency (critical) suspend and maintains the memory (device resumes instead of rebooting) for a maximum of 60 seconds. If the battery is not replaced within 60 seconds, the memory persistence may run out and the device will reboot after installing the charged battery. The persistence duration of 30 seconds for Wi-Fi\WAN and 60 seconds for memory are maximum values. These durations may be reduced depending on the usage of the applications, network considerations, and hardware features being used on the device.

Battery True Hot Swap Persistence

The persistence duration of 30 seconds for Wi-Fi\WAN and 60 seconds for memory are maximum values. Although there is the ability to interact with the device during this time, the device settings will be in the following state during the Battery True Hot Swap and restored after the swap:

- Display dims to 10% brightness
- Volume reduces to level 1
- Reduced uplink/downlink throughput
- Disabled features: NFC, scanner, Soft AP, Wi-Fi direct.

Other Factors Affecting Battery True Hot Swap Behavior

Avoid the following activities before and during a Battery True Hot Swap:

- Any new user-initiated activities on the device during battery removal
- Third party applications or launchers holding a wakelock
- Initiating or maintaining a WAN voice call

- Initiating or maintaining a WAN data transfer (files, streaming).

True Hot Swap Battery Replacement

NOTE: Battery True Hot Swap is available on TC53/TC58 Premium devices only.

To perform a True Hot Swap:

1. If a hand strap is attached, remove the hand strap.
2. Press the two battery latches down.

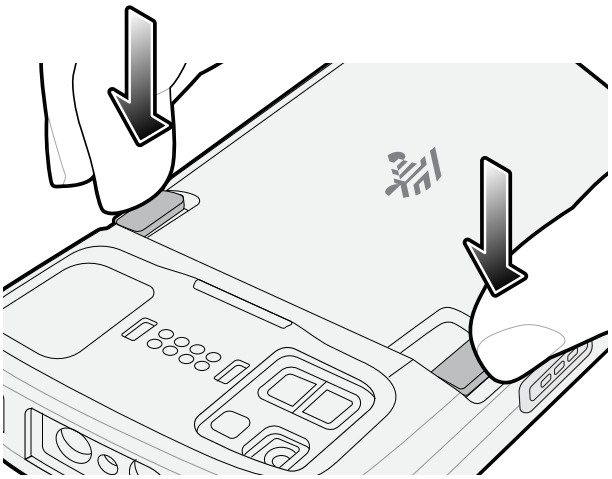

CAUTION: Do not attempt to insert fingers under the latches when pulling on the battery. Damage to the latches may occur.

3. While pressing the latches down, press the two latches in toward the center of the device. The latches must be pressed in completely to release the battery.

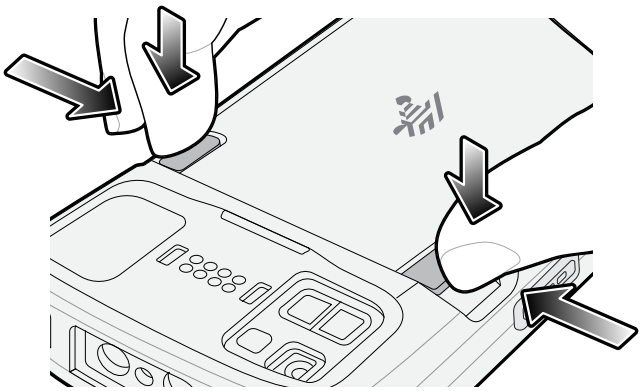

4. Lift the battery from the device. A 30 second countdown timer displays. The backup super capacitor takes over immediately and the device remains powered with the display dimmed.

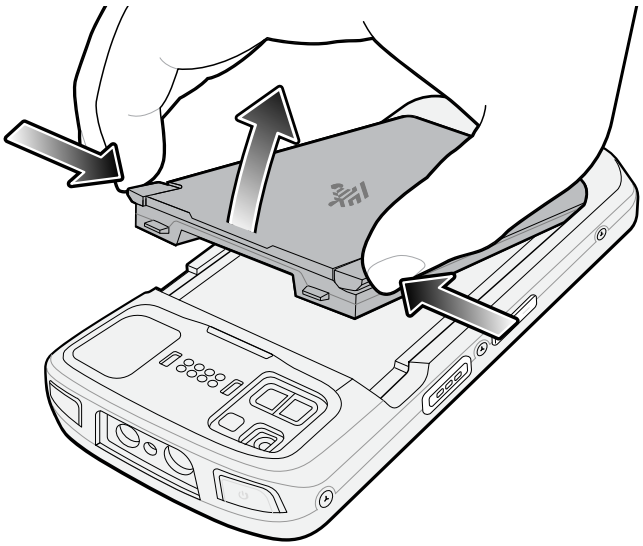

NOTE:

If the battery is not replaced after 30 seconds (max.), the device display turns off and the device enters into memory persistence state for an additional 60 seconds (max.).

5. Insert the replacement battery, bottom first, into the battery compartment in the back of the device.
6. Press the battery down until the battery release latches snap into place. If the device display turn off, it should automatically turn on.

NOTE:

If the device does not automatically turn on, press and hold the power button for 6 seconds and the device reboots.

7. Replace the hand strap, if required.

Turning Off the Radios

1. Swipe down from the Status bar to open the Quick Settings panel.

2. Touch Airplane mode. The airplane icon appears in the Status bar indicating that all the radios are off.

Interactive Sensor Technology

The device contains sensors that monitor movement, orientation and ambient light.

- Gyroscope - Measures angular rotational velocity to detect rotation of the device.
- Accelerometer - Measures the linear acceleration of movement to detect the orientation of the device.
- Digital Compass - The digital compass or magnetometer provides simple orientation in relation to the Earth's magnetic field. As a result, the device always knows which way is North so it can auto rotate digital maps depending on the physical orientation of the device.
- Light Sensor - Detects ambient light and adjusts the screen brightness.
- Pressure Sensor - Detects pressure on the touch screen.

In order to take advantage of these sensors, applications use API commands. Refer to the Google Android Sensor APIs for more information. For information on the Zebra Android EMDK, go to: techdocs.zebra.com.

Waking the Device

The device goes into Sleep mode when you press **Power** or after a period of inactivity (set in the Display settings window).

1. To wake the device from Sleep mode, press **Power** or the configured wake-up sources.

   The Lock screen displays.

2. Swipe the screen up to unlock.
   - If the screen option is set to Swipe, the Home screen displays.
   - If either the PIN or Password screen unlock feature is enabled, a prompt displays. Enter the PIN or password to unlock the device and move to the Home screen.
   - If the Pattern screen unlock feature is enabled, the Pattern screen displays. Swipe the correct pattern between the dots to unlock the device and move to the Home screen.

NOTE: If you enter the PIN, password, or pattern incorrectly five times, you must wait 30 seconds before trying again.

- If you forget the PIN, password, or pattern, contact your system administrator.

USB Communication

Connect the device to a host computer to transfer files between the device and the host computer.

When connecting the device to a host computer, follow the host computer's instructions for connecting and disconnecting USB devices, to avoid damaging or corrupting files. For information on USB communication accessories available for this device, see Accessories.

Transferring Files

Use the Transfer files option to copy files between the device and the host computer.

1. Connect the device to a host computer using a USB accessory.
2. On the device, pull down the Notification panel and touch **Charging this device via USB**.

   By default, **No data transfer** is selected.
3. Touch **File Transfer**.

NOTE: After changing the setting to **File Transfer**, and then disconnecting the USB cable, the setting reverts back to **No data transfer**. If the USB cable is reconnected, select **File Transfer** again.

4. On the host computer, open **File Explorer**.
5. Locate the **device** as a portable device.
6. Open the SD card or the Internal storage folder.
7. Copy files to and from the device or delete files as required.

Transferring Photos

Use PTP to copy photos from the device to the host computer.

1. Connect the device to a host computer using a USB accessory.
2. On the device, pull down the Notification panel and touch **Charging this device via USB**.
3. Touch **Transfer photos PTP**.
4. On the host computer, open a file explorer application.
5. Open the SD card or the Internal storage folder.
6. Copy or delete photos as required.

Disconnecting from the Host Computer

NOTE: Carefully follow the host computer's instructions to unmount the microSD card and disconnect USB devices correctly to avoid losing information.

1. On the host computer, unmount the device.
2. Remove the device from the USB accessory.

Settings

This section describes the settings on the device.

Accessing Settings

There are multiple ways to access settings on a device.

1. Swipe down with two fingers from the top of the Home screen to open the Quick Access panel and touch ⚙.
2. Double-swipe down from the top of the Home screen to open the Quick Access panel and touch ⚙.
3. Swipe up from the bottom of the Home screen to open APPS and touch ⚙.

Display Settings

Use Display settings to change the screen brightness, enable night light, change the background image, enable screen rotation, set screen timeout, enable dark theme, and change font size.

Setting the Screen Brightness Automatically

Automatically adjust the screen brightness using the built-in light sensor.

1. Go to **Settings** > **Display**.
2. Touch **Adaptive brightness** to toggle the feature on or off.

   When enabled, the screen brightness automatically adjusts to your environment and activities.

Setting the Screen Brightness Manually

Manually set the screen brightness using the touchscreen.

1. Swipe down with two fingers from the Status bar to open the Quick Access panel.
2. Slide ⚙ left or right to adjust the screen brightness level.

Setting Night Light

The Night Light setting tints the screen amber, making the screen easier to look at in low light.

1. Go to **Settings**.
2. Touch **Display**.
3. Touch **Night Light**.
4. Touch **Schedule**.
5. Select one of the schedule values:
   - **None** (default)
   - **Turns on at custom time**
   - **Turns on from sunset to sunrise**
6. By default, **Night Light** is disabled.
   - On Android 11, touch **TURN ON NOW** to enable.
   - On Android 13, touch **Use Night Light** to enable.
7. Adjust the tint using the **Intensity** slider.

Setting Screen Rotation

By default, screen rotation is enabled.

NOTE: To change the Home screen rotation, see Setting Home Screen Rotation

1. Go to **Settings**.
2. On Android 11, touch **Display** > **Advanced**.
3. On Android 13, touch **Display**.
4. Touch **Auto-rotate screen**.
5. Touch **Home**.

Setting Screen Timeout

The screen turns off and goes into Suspend mode after the selected period of inactivity.

1. Go to **Settings**.
2. On Android 11, touch **Display** > **Advanced** > **Screen timeout**.
3. On Android 13, touch **Display** > **Screen timeout**.

4. Select one of the sleep values:
   - **15 seconds**
   - **30 seconds**
   - **1 minute** (default)
   - **2 minutes**
   - **5 minutes**
   - **10 minutes**
   - **30 minutes**
5. On Android 13, turn on the **Screen attention** switch to prevent your screen from turning off when you are looking at it.

Setting Lock Screen Notifications

The lock screen display setting wakes the screen when notifications are received.

1. Go to **Settings**.
2. On Android 11, touch **Display** > **Advanced**.
3. On Android 13, touch **Display**.
4. Touch **Lock screen**.
5. On Android 11, in the **When to show** section, enable or disable an option using the switch.
6. On Android 13, in the **What to show** and **When to show** sections, enable or disable an option using the switch.

Setting Font Size

Set the size of the font in system apps.

1. Go to **Settings**.
2. On Android 11, touch **Display** > **Advanced** > **Font size**.
3. Select a font size option:
   - **Small**
   - **Default**
   - **Large**
   - **Largest**
4. On Android 13, touch **Display** > **Display size and text**.

   Use the **Font size +** and **-** to vary the font size.
5. Touch **Home**.

Setting Display Size

By default, the display size is set to Default.

1. Go to **Settings**.

2. On Android 11, touch **Display** > **Advanced** > **Display size**.
3. Touch - and + to change the display size.
   - **Small**
   - **Default**
   - **Large**
4. On Android 13, touch **Display** > **Display size and text**.

   Use the **Display size +** and **-** to vary the text size.
5. Touch **Home**.

Notification LED Brightness Level

1. Go to **Settings**.
2. On Android 11, touch **Display** > **Advanced**.
3. On Android 13, touch **Display**.
4. Touch **Notification LED Brightness Level**.
5. Use the slider to set the brightness value (default: 15).

Setting Touch Panel Mode

The device display is able to detect touches using a finger, a conductive-tip stylus, or a gloved finger.

NOTE: A glove can be made of medical latex, leather, cotton, or wool. For optimal performance, use a Zebra-certified stylus.

1. Go to **Settings**.
2. On Android 11, touch **Display** > **Advanced**.
3. On Android 13, touch **Display**.
4. Touch **Touch Panel UI**.
5. Select:

IMPORTANT: For optimal performance, if you are just using your finger and no gloves, select **Finger Only**.

   - **Stylus and Finger (Screen Protector OFF)** to use a finger or a stylus on the screen without a screen protector.
   - **Glove and Finger (Screen Protector OFF)** to use a finger or a gloved finger on the screen without a screen protector.
   - **Stylus and Finger (Screen Protector ON)** to use a finger or a stylus on the screen with a screen protector.
   - **Glove and Finger (Screen Protector ON)** to use a finger or a gloved finger on the screen with a screen protector.
   - **Finger Only** to use a finger (no gloves) on the screen (default).
6. Touch the Home button.

Setting the Date and Time

The date and time are automatically synchronized using a NITZ server when the device is connected to a cellular/wireless network. You are only required to set the time zone or set the date and time if the wireless LAN does not support Network Time Protocol (NTP) or when not connected to a cellular/wireless network.

1. Go to **Settings**.
2. Touch **System** > **Date & time**.
3. To disable automatic date and time synchronization:
   - On Android 11, touch **Use network-provided time**.
   - On Android 13, touch **Set time automatically**.
4. To disable automatic time zone synchronization:
   - On Android 11, touch **Use network-provided time zone**.
   - On Android 13, touch **Set time zone automatically**.
5. Touch **Date** to select the date in the calendar.
6. Touch **OK**.
7. Touch **Time**.
   a) Touch the circle, drag to the current hour, and then release.
   b) Touch the circle, drag to the current minute, and then release.
   c) Touch **AM** or **PM**.
8. Touch **OK**.
9. Touch **Time zone** to select the current time zone from the list.
10. Touch **Update Interval** to select an interval to synchronize the system time from the network.
11. In **TIME FORMAT**, choose either **Use locale default** or **Use 24-hour format**.

General Sound Setting

Press the volume buttons on the device to display on-screen volume controls.

Use the Sound settings to configure media and alarm volumes.

1. Go to **Settings**.
2. On Android 11, touch **Sound**.
3. On Android 13, touch **Sound & Vibration**.
4. Touch an option to set sounds.

Sound Options

- **Media volume** - Controls the music, games, and media volume.
- **Call volume** - Controls the volume during a call.
- **Ring & notification volume** - Controls the ringtone and notification volume. (Android 11 only)
- **Alarm volume** - Controls the alarm clock volume.

- **Notification volume** - Control notification volume. (Android 13 only)
- **Vibrate for calls** - Switch on or off.
- **Do Not Disturb** - Mutes some or all sounds and vibrations.
- **Media** - Shows the media player in Quick Settings while sound is playing, allowing quick access.
- **Vibration & haptics** - Enable or disable vibration and/or haptic settings. (Android 13 only)
- **Shortcut to prevent ringing** - Turn on the switch to make the device vibrate when a call is received (default – disabled).
- **Phone ringtone** - Select a sound to play when the phone rings.
- **Live Caption** - Detects speech on your device and automatically generates captions. (Android 13 only)
- **Default notification sound** - Select a sound to play for all system notifications.
- **Default alarm sound** - Select a sound to play for alarms.
- **Other sounds and vibrations:**
  - **Dial pad tones** - Play a sound when pressing keys on dial pad (default - disabled).
  - **Screen locking sounds** - Play a sound when locking and unlocking the screen (default – enabled).
  - **Charging sounds and vibration** - Play a sound and vibrate when power is applied to the device (default - enabled).
  - **Touch sounds** - Play a sound when making screen selections (default – enabled).
  - **Touch vibration** - Vibrate the device when making screen selections (default – enabled).
- **Always show icon when in vibrate mode** - Turn on the switch to show the icon when in vibrate mode (default - disabled). (Android 13 only)

Zebra Volume Controls

In addition to the default sound settings, Zebra Volume Controls display when the volume buttons are pressed.

Zebra Volume Controls are configured using Audio Volume UI Manager (AudioVolUIMgr). Administrators can use AudioVolUIMgr to add, delete and replace Audio Profiles, select an Audio Profile to use the device, and modify the default Audio Profile. For information on how to configure Zebra Volume Controls using AudioVolUIMgr, refer to techdocs.zebra.com.

Setting Wake-Up Sources

By default, the device wakes from Sleep mode when the user presses **Power**. The device can be configured to wake when the user presses **PTT** or **Scan** on the left side of the device handle.

1. Go to **Settings**.

2. Touch **Wake-Up Sources**.
   - **LEFT_TRIGGER_2** - PTT button.
   - **REAR_BUTTON** - Optional Trigger Handle scan button.
   - **RIGHT_TRIGGER_1** - Right scan button.
   - **SCAN** - Left scan button.
3. Touch a checkbox.

   A check appears in the checkbox.
4. Touch the Home button.

Remapping a Button

Buttons on the device can be programmed to perform different functions or as shortcuts to installed apps. For a list of key names and descriptions, go to techdocs.zebra.com/keymappingmgr/.

NOTE: Zebra does not recommend remapping the scan button.

1. Go to **Settings**.
2. Touch **Key Programmer**. A list of programmable buttons displays.
3. Select the button to remap.
4. Touch the **BUTTON REMAPPING**, the **SHORTCUT**, or the **TRIGGER** tabs to list the available functions, applications, and triggers.
5. Touch a function or application shortcut to map to the button.

NOTE: If you select an application shortcut, the application icon appears next to the button on the Key Programmer screen.

Remappable Keys

List of remappable device keys.

Figure 11 Key Positions

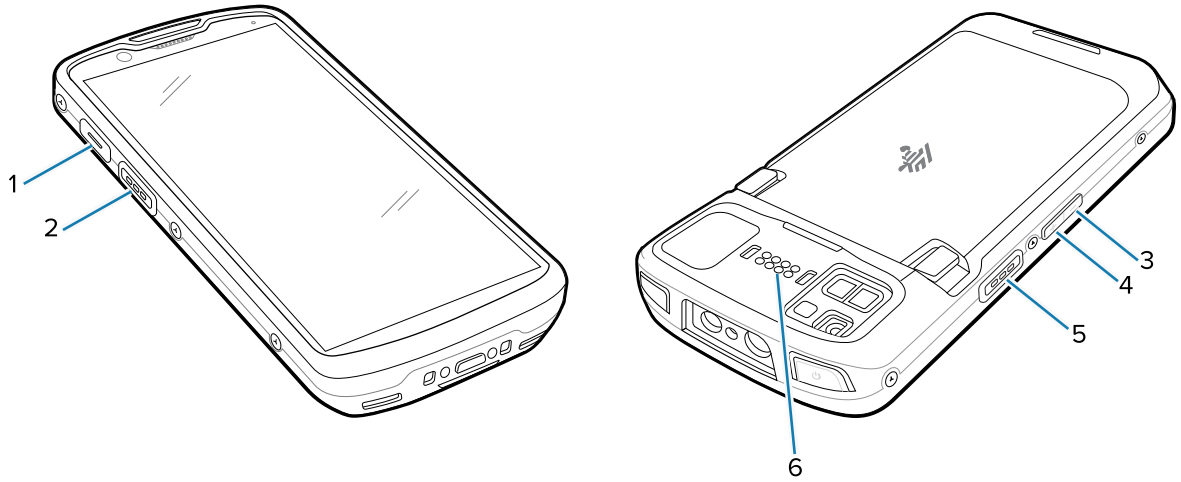

1	BUTTON_L2	PTT button
2	SCAN	Left scan button
3	VOLUME_DOWN	Volume down button
4	VOLUME_UP	Volume up button
5	BUTTON_R1	Right scan button
6	BUTTON_L1	I/O for programming accessories

Alert Button

Configure any remappable key on the device as an Alert button using StageNow.

Use an Alert button to launch an app and a command, or call a specified phone number.

Configure the Alert Button

This section provides basic configuration. For detailed information on configuring the Alert button, refer to zebra.techdocs.com/stagenow.

Configure the Alert button through StageNow, using the following Configuration Service Providers (CSPs).

- PowerMgr - Set All Wake-Up Sources to Turn on. This wakes the device if it is in Sleep mode.

- Intent - Create a new setting:
  - Mode - Set to Schedule sending of Intent on key presses.
  - Keep Device Awake - Enable this option to keep the device awake after the short key press.
  - Key Identifier - Select a remappable key. For example, Rear Button.
  - Android Action Name - Enter the action name. For example, to initiate a call, enter android.intent.action.CALL.
  - URI - Enter the URI. For example, to call a phone number, enter tel:123456789.
- KeyMappingMgr - Modify the default behavior of the button. It is recommended to set this to **None**. Otherwise, the button performs its default behavior and sends out an alert.

Alert Accessibility Service

After you configure the Alert button using StageNow, the Alert Accessibility Service becomes available on the device.

Go to **Settings** > **Accessibility** > **Alert Accessibility service** to enable or disable the alert button. The device automatically enables the Alert Accessibility Service when it reboots.

Using an Alert Button

Activate the Alert button using a long-press of at least one second to prevent accidental alerts.

- If the device is in Sleep mode, perform a short-press on the Alert button, followed by a long-press.
- If the device is awake, perform a long-press on the Alert button.

Keyboards

The device provides multiple keyboard options.

NOTE: By default, the Enterprise and Virtual Keyboards are disabled. The Enterprise Keyboard is available for download from the Zebra Support Site.

- Android Keyboard - AOSP devices only
- Gboard - GMS devices only
- Physical Keyboard
- Enterprise Keyboard - Not pre-installed on the device. Contact Zebra Support for more information.

Keyboard Configuration

This section describes configuring the device's keyboard.

Using the Android and Gboard Keyboards

Use the Android or Gboard keyboards to enter text in a text field.

- To configure the keyboard settings, touch and hold "," (comma) and then select **Android keyboard settings**.

Edit Text

Edit entered text and use menu commands to cut, copy, and paste text within or across apps. Some apps do not support editing some or all of the text they display; others may offer their own way to select text.

Entering Numbers, Symbols, and Special Characters

This section describes how to input numbers, symbols, and special characters using the keyboard.

1. Enter numbers and symbols.
   - Touch and hold one of the top-row keys until a menu appears then select a number or special character.
   - Touch the Shift key once for a single capital letter. Touch the Shift key twice to lock in uppercase. Touch the Shift key a third time to unlock Capslock.
   - Touch **?123** to switch to the numbers and symbols keyboard.
   - Touch the **=\<** key on the numbers and symbols keyboard to view additional symbols.
2. Enter special characters.
   - Touch and hold a number or symbol key to open a menu of additional symbols. A larger version of the key displays briefly over the keyboard.

Enterprise Keyboard

The Enterprise Keyboard contains multiple keyboard types.

NOTE: Only available with Mobility DNA Enterprise License.

- Numeric
- Alpha
- Special characters
- Data capture

Numeric Tab

The numeric keyboard is labeled **123**. The keys displayed vary on the app being used. For example, an arrow displays in **Contacts**, however **Done** displays in **Email** account setup.

Alpha Tab

The alpha keyboard is labeled using the language code. For English, the alpha keyboard is labeled **EN**.

Additional Character Tab

The additional characters keyboard is labeled **#*/**.

- Touch ☺ to enter emoji icons in a text message.
- Touch **ABC** to return to the Symbols keyboard.

Scan Tab

The Scan tab provides an easy data capture feature for scanning barcodes.

Language Usage

Use the **Language & input** settings to change the device's language, including words added to the dictionary.

Changing the Language Setting

1. Go to **Settings**.
2. Touch **System** > **Languages & input**.
3. Touch **Languages**.

   A list of available languages displays.
4. If the desired language is not listed, touch **Add a language** and select a language from the list.
5. Touch and hold ☰ to the right of the desired language, then drag it to the top of the list.

   The operating system text changes to the selected language.

Adding Words to the Dictionary

1. Go to **Settings**.
2. On Android 11, touch **System** > **Languages & input** > **Advanced** > **Personal dictionary**.
3. On Android 13, touch **System** > **Languages & input** > **Personal dictionary**.
4. If prompted, select the language where this word or phrase is stored.
5. Touch **+** to add a new word or phrase to the dictionary.
6. Enter the word or phrase.
7. In the **Shortcut** text box, enter a shortcut for the word or phrase.

Notifications

The user can configure notifications for the device and for specific apps. Device notifications settings allow the user to configure how notifications occur on the device. App notification settings allow the user to configure how notifications for a specific app occur.

On Android 11, to view device notification settings, touch **Settings** > **Apps & notifications** > **Notifications**. To view app notifications, **Settings** > **Apps & notifications** > **App info**, and then select an app.

On Android 13, to view device notification settings, touch **Settings** > **Notifications**. To view app notifications, **Settings** > **App** > **All Apps**, and then select an app.

Setting App Notifications

Configure the notifications settings for a specific app.

1. Go to **Settings**.
2. On Android 11, touch **Apps & notifications** > **SEE ALL XX APPS**. The app info screen displays.
3. On Android 13, touch **Apps** > **All apps**, and then select an app. The app info screen displays.
4. Select an app.
5. Touch **Notifications**.

   Options vary depending on the app selected.
6. On Android 11, select an available option:

   Show notifications - Select to turn all notifications from this app on (default) or off. Touch a notification category to display additional options.

   - **Alerting** - Allow notifications from this app to make a sound.
     - **Pop on screen** - Allow notifications from this app to pop notifications on the screen.
   - **Alerting** - Allow notifications from this app to make sound or vibrate the device.
     - **Pop on screen** - Allow notifications from this app to pop notifications on the screen.
   - **Silent** - Do not allow notifications from this app to make a sound.
     - **Minimize** - In the Notification panel, collapse notifications to one line.
   - **Silent** - Do not allow notifications from this app to make sound or vibrate.
     - **Minimize** - In the Notification panel, collapse notifications to one line.
   - **Advanced** - Touch for additional options.
     - **Sound** - Select a sound to play for notifications from this app.
     - **Vibrate** - Allow notifications from this app to vibrate the device.
     - **Blink light** - Allow notifications from this app the light the Notification LED blue.
     - **Show notification dot** - Allow notifications from this app to add a notification dot to the app icon.
     - **Override Do Not Disturb** - Allow these notifications to interrupt when Do Not Disturb is enabled.

   Advanced

   - **Allow notification dot** - Do not allow this app to add a notification dot to the app icon.
   - **Additional settings in the app** - Open the app settings.
7. On Android 13, touch the switch to turn on or off notifications for this app.
   - **Allow notification dot** - Do not allow this app to add a notification dot to the app icon.
   - **Additional settings in the app** - Open the app settings.

Viewing Notifications

1. Go to **Settings**.
2. On Android 11, touch **Apps & Notifications**.
3. On Android 13, touch **Notifications** > **App Settings**.

4. Scroll down to **Notifications** to view how many apps have notifications turned off.

Controlling Lock Screen Notifications

Control whether notifications can be seen when the device is locked.

1. Go to **Settings**.
2. On Android 11, touch **Apps & notifications** > **Notifications**.
3. On Android 13, touch **Notifications**.
4. On Android 11, touch **Notifications** on lockscreen and select one of the following:
   - **Show alerting and silent notifications** (default)
   - **Show alerting notifications only**
   - **Don’t show notifications**
5. On Android 13, touch **Notifications** on lockscreen and select one of the following:
   - **Show conversations, default and silent** (default)
   - **Hide silent conversations and notifications**
   - **Don't show any notifications**

Enabling Blink Light

The Notification LED lights are blue when an app, such as email and VoIP, generates a programmable notification or to indicate when the device is connected to a Bluetooth device. By default, LED notifications are enabled.

1. Go to **Settings**.
2. On Android 11, touch **Apps & notifications** > **Notifications** > **Advanced**.
3. On Android 13, touch **Notifications**.
4. Touch **Blink light** to toggle the notification on or off.

Applications

The APPS screen displays icons for all installed apps. See Application Deployment for information on installing and uninstalling apps. For information on standard Android apps, go to the Google Play Apps store.

Installed Applications

Aside from the common Google apps, the Zebra-specific apps that are installed on the device are described in this section.

Table 9 Apps

Item	Description
	Battery Manager - Displays battery information, including charge level, status, health and wear level, and use to place device in Battery Swap mode when replacing the battery.
	Bluetooth Pairing Utility – Use to pair a Zebra Bluetooth scanner with the device by scanning a barcode.
	DataWedge - Enables data capture using the imager.
	DisplayLink Presenter - Use to present the device screen onto a connected monitor.
	DWDemo - Provides a way to demonstrate the data capture features using the imager.
	License Manager - Use to manage software licenses on the device.
	RxLogger - Use to diagnose device and app issues.

Table 9 Apps (Continued)

Item	Description
	StageNow - Allows the device to stage a device for initial use by initiating the deployment of settings, firmware, and software.
	VoD - The Video on Device basic app provides a how-to video for proper device cleaning. For Video on Device licensing information, go to learning.zebra.com.
	Wireless Analyzer - A diagnostic intelligent app. Use to diagnose surrounding area and display network stats, such as coverage hole detection, or AP in the vicinity. Refer to the Wireles Analyzer Administrator Guide for Android. Only available with Mobility DNA Enterprise License.
	Zebra Bluetooth Settings - Use to configure Bluetooth logging.
	Zebra Data Services - Use to enable or disable Zebra Data Services. Some options are set by the system administrator.
	Zebra Showcase - Provides a way to experience and learn about Zebra's new or existing capabilities. (Android 13 only)

Accessing Apps

Access all apps installed on the device using the APPS window.

1. On the Home screen, swipe up from the bottom of the screen.
2. Slide the **APPS** window up or down to view more app icons.
3. Touch an icon to open the app.

Switching Between Recent Apps

Use the Recent button to switch between recently used apps.

1. Touch Recent.

   A window appears on the screen with icons of recently used apps.
2. Slide the apps displayed up and down to view all recently used apps.
3. Swipe left or right to remove app from the list and force close the app.
4. Touch an icon to open an app or touch Back button to return to the current screen.

Battery Manager

The Battery Manager provides detailed information about the battery.

This section also provides battery swap procedures for supported devices.

Opening Battery Manager

- To open the Battery Manager app, swipe up from the bottom of the Home screen, and then touch .

Battery Manager Information Tab

The Battery Manager displays detailed information about battery charging, health, and status.

Table 10 Battery Icons

Battery Icon	Description
	Battery charge level is between 85% and 100%.
	Battery charge level is between 19% and 84%.
	Battery charge level is between 0% and 18%.

- **Level** - The current battery charge level as a percentage. Displays -% when the level is unknown.
- **Wear** - The health of the battery in graphical form. When the wear level exceeds 80%, the bar color changes to red.
- **Health** - The health of the battery. If a critical error occurs, displays. Touch to view the error description.
  - **Decommission** - The battery is past its useful life and should be replaced. Contact the system administrator.
  - **Good** - The battery is good.
  - **Charge error** - An error occurred while charging. Contact the system administrator.
  - **Over Current** - An over-current condition occurred. Contact the system administrator.
  - **Dead** - The battery has no charge. Replace the battery.
  - **Over Voltage** - An over-voltage condition occurred. Contact the system administrator.
  - **Below Temperature** - The battery temperature is below the operating temperature. Contact the system administrator.
  - **Failure Detected** - A failure has been detected in the battery. Contact the system administrator.
  - **Unknown** - Contact the system administrator.

- **Charge Status**
  - **Not charging** - The device is not connected to AC power.
  - **Not charging** - The device is not charging.
  - **Charging-AC** - The device is connected to AC power and charging or is fast charging via USB.
  - **Charging-USB** - The device is connected to a host computer with a USB cable and charging.
  - **Discharging** - The battery is discharging.
  - **Full** - The battery is fully charged.
  - **Unknown** - The battery status is unknown.
- **Time until Full** - The amount of time until the battery is fully charged.
- **Time since charging** - The amount of time since the device began charging.
- **Time until empty** - The amount of time until the battery is empty.
- **Advanced info** - Touch to view additional battery information.
- **Battery present status** - Indicates that the battery is present.
- **Battery level** - The battery charge level as a percentage of scale.
- **Battery scale** - The battery scale level used to determine battery level (100).
- **Battery voltage** - The current battery voltage in millivolts.
- **Battery temperature** - The current battery temperature in degrees Celsius.
- **Battery technology** - The type of battery.
- **Battery current** - The average current into or out of the battery over the last second in mAh.
- **Battery manufacture date** - The date of manufacture.
- **Battery serial number** - The battery serial number. The number matches the serial number printed on the battery label.
- **Battery part number** - The battery part number.
- **Battery rated capacity** - Lists the rated capacity of the backup battery in mAh.
- **Battery decommission status** - Indicates if the battery is past its life span.
  - **Battery Good** - The battery is in good health.
  - **Decommissioned Battery** - The battery is past its useful life and should be replaced.
- **Base cumulative charge** - Cumulative charge using Zebra charging equipment only.
- **Battery present capacity** - Maximum amount of charge that could be pulled from the battery under the present discharge conditions if the battery were fully charged.
- **Battery health percentage** - With a range from 0 to 100, this is the ratio of “present_capacity” to “design_capacity” at a discharge rate of “design_capacity”.
- **% decommission threshold** - The default % decommission threshold for a gifted battery as 80%.
- **Battery present charge** - Amount of usable charge remaining in the battery at present under the current discharge conditions.
- **Battery total cumulative charge** - The total accumulated charge in all chargers.
- **Battery time since first use** - The time passed since the battery was placed in a Zebra terminal for the first time.

- **Battery error status** - The error status of the battery.
- **Battery usage number** - The health of the battery as a result of charging and discharging. A high number indicates low battery health.
- **Usage decommission threshold** - When the Battery usage number is greater than or equal to the Usage decommission threshold, the battery is past its useful life and should be replaced.
- **App version** - The application version number.

Battery Manager Swap Tab

Use to place the device in Battery Swap mode when replacing the battery. Follow the instructions on the screen. Touch **I understand. Proceed with swap** button.

NOTE: The Swap tab also appears when the user presses the Power button and selects Battery Swap.

Camera

This section provides information for taking photos and recording videos using the integrated digital cameras.

NOTE: The device saves photos and videos on the microSD card, if installed and the storage path is changed manually. By default, or if a microSD card is not installed, the device saves photos and videos on internal storage.

Taking Photos

NOTE: See Camera Settings for camera settings descriptions.

1.
Swipe up from the bottom of the Home screen and touch **Camera** to access the Camera application. Photo mode is the standard mode that displays.

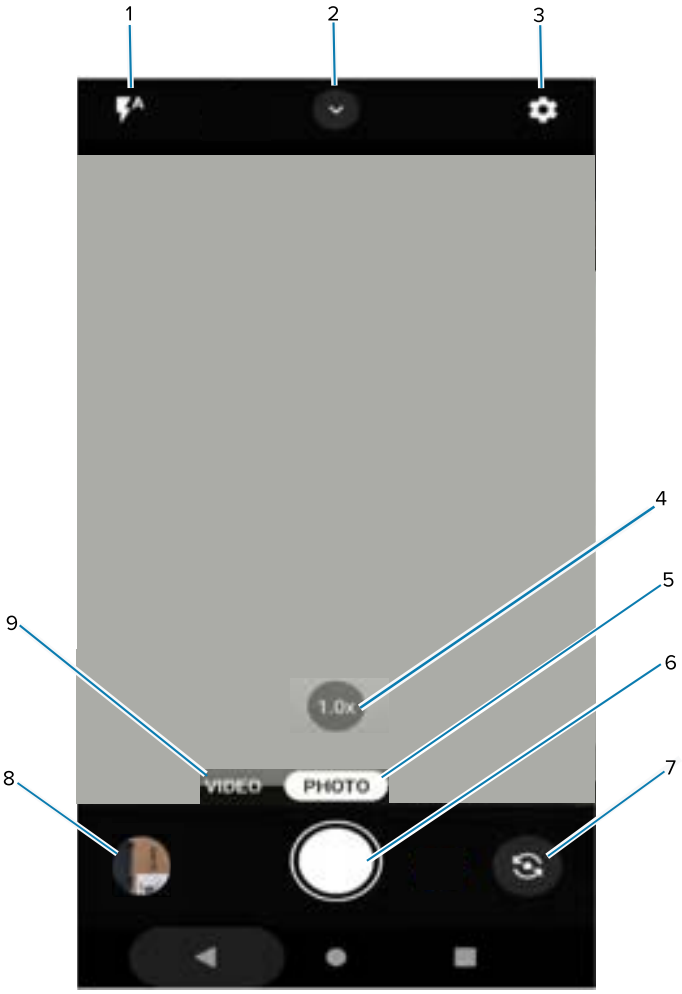

1	Flash
2	Camera Quick Settings
3	Camera App Settings
4	Zoom
5	Photo mode
6	Shutter button
7	Rear/front cameras
8	Thumbnail
9	Video mode

2. To switch between the rear camera and front camera (if available), touch .
3. Frame the subject on the screen.
4. Touch an area on the screen to focus. The yellow focus box displays and places that area into focus. Alternatively, the AutoFocus Animation can be enabled in the Settings menu and the yellow focus box automatically appears when in focus.
5. To turn the Flash on, touch the icon which can also be accessed via the Quick Settings Menu.
6. To zoom in or out, the following options are available:
   - Tap the **1.0x** zoom button to toggle between **1.0x** and**2.0x**.
   - Press and hold the **1.0x** zoom icon until the zoom slider displays. Slide the slider to the desired zoom.
   - Touch and hold an area with two fingers, then spread them apart to zoom in or pinch them together to zoom out.
7. Touch to take a photo. A shutter sound emits.

The last photo displays as a thumbnail in the lower-left corner.

Recording Videos

1. Swipe up from the bottom of the Home screen and touch to launch the Camera application.

2. Touch **Video** to access Video mode.

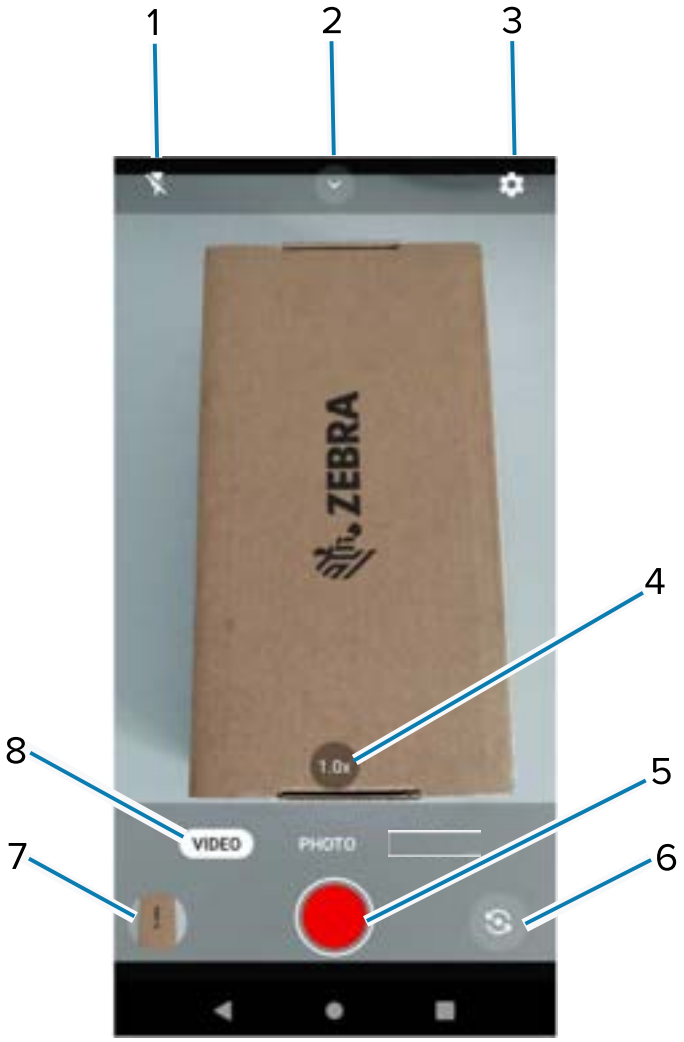

1	Flash
2	Video Quick Settings
3	Camera App Settings
4	Zoom
5	Start/stop recording button
6	Rear/front cameras
7	Thumbnail
8	Video mode

3. To switch between the rear camera and front camera (if available), touch .
4. Point the camera and frame the scene.

5. Touch an area on the screen to focus. The yellow focus box displays and places that area into focus. Alternatively, the AutoFocus Animation can be enabled in the Settings menu and the yellow focus box automatically appears when in focus.
6. To turn the Flash on, touch the icon which can also be accessed via the Quick Settings Menu.
7. Tap the **1.0x** zoom button to toggle between **1.0x** and **2.0x** or press and hold the **1.0x** zoom icon until the zoom slider displays and slide the slider to the desired zoom.
8. Touch the **Record** button. The video timer displays at the top of the screen.

1	Flash
2	Video timer
3	Audio
4	Zoom
5	Start/stop recording button
6	Still image capture button (during video recording)

7	Pause recording button
8	Video mode

9. Touch the **Record** button to end the recording.

Quick Camera Photo Mode and Video Mode Settings

In Photo mode, touch to display the Quick Camera Setting options.

- **Flash** - Flash's light can compensate for the lack of brightness when shooting in dimly lit situations. Options: **Auto**, **On**, or **Off**.
- **Timer** - Select Off (default), **3 seconds**, or **10 seconds**.
- **White Balance** - Select how the camera adjusts colors in different kinds of light, see Android 11 Camera Settings for detailed options. (Android 11 only)
- **White Balance** - Select how the camera adjusts colors in different kinds of light. Select **Auto** (default), **Incandescent**, or **Fluorescent**. (Android 13 only)
- **Active Scene** - Options include (Android 11 only):
  - **Auto** - Automatically adjusts when in mixed light conditions.
  - **HDR** - Select when in mixed lighting conditions such as low light and backlit scenes.
  - **Pro Mode** - Easy access to ISO, exposure, white balance, and focus advanced settings.
  - **Pro Mode** - Turn on for easy access to ISO, exposure, white balance, and focus advanced settings. (Android 13 only)

In Video mode, touch prior to video recording to display the Quick Camera Setting options.

- **Flash** - Flash's light can compensate for the lack of brightness when shooting in dimly lit situations. Options: **Auto**, **On**, or **Off**.
- **Resolution** - Select from options: **4K UHD**, **HD 1080p**, **SD 480p**.
- **Resolution** - Number of pixels in each frame. Select **HD 1080p** (default), **HD 720p**, or **SD 480p**. (Android 13 only)
- **Audio** - Enable (default) or disable the audio.
- **White Balance** - Select how the camera adjusts colors in different kinds of light, see Android 11 Camera Settings for detailed options. (Android 11 only)
- **White Balance** - Select how the camera adjusts colors in different kinds of light. Select **Auto** (default), **Incandescent**, or **Fluorescent**. (Android 13 only)

NOTE: Go to Android 13 Camera and Video Settings for more setting descriptions. (Android 13 only)

Android 11 Camera Settings

In Photo mode, camera settings appear on the screen. Touch ⚙ to display the camera setting options.

- General
  - **Camera Sounds** - Enable (default) or disable camera sounds.
  - **Location Tags** - Select to include location information when pictures and videos are taken.
  - **Storage** - Set the location to store the photo to: Phone or SD Card.
  - **Dirty Lens Detection** - Enable to receive alerts when the camera lens is dirty.
  - **QR Code Mode** - Select to enable to QR Code scanning with an option to open URLs via the browser.
  - **Google Lens Mode** - Select to enable to allow#Google developed recognition technology that brings up relevant information related to identified objects within an image.
  - **Digital Level** - Select to enable or disable digital guide to keep photos aligned.
  - **Face Detection** - Select to turn face detection Off (default) or On.
  - **Gestures** - View gestures and power user controls. Gestures include: Swipe Down, Swipe Up, Side Swipe, Tap, Tap + Hold, Double Tap, and Hold Zoom.
- Still Camera
  - **Photo Grid** - Enable to apply a 3x3 grid guide to the camera viewport.
  - **Countdown timer** - Select Off (default), 3 seconds, or 10 seconds.
  - **Picture size** - The size (in pixels) of the photo to: 16M pixels (default), 8M pixels, WVGA, VGA, QVGA.
  - **Picture quality** - Set the picture quality setting to: Low, Standard, or High (default).
  - **Exposure** - Set the exposure settings to: -2, -1.5, -1, -0.5, 0 (default), +0.5, +1, +1.5, +2.
  - **White balance** - Select how the camera adjusts colors in different kinds of light, to achieve the most natural-looking colors:
    - **Auto** - Adjust the white balance automatically (default).
    - **Incandescent** - Adjust the white balance for incandescent lighting.
    - **Fluorescent** - Adjust the white balance for fluorescent lighting.
    - **Daylight** - Adjust the white balance for daylight.
    - **Cloudy** - Adjust the white balance for a cloudy environment.
  - **Picture Format** - All still images are saved in JPEG (default) or RAW format.
  - **MFNR** - Enable (default) or Disable Multi-frame Noise Reduction which improves picture quality in low light conditions.
  - **AutoFocus Animation** - Disable (default) or enable the camera focus ring in the camera preview.

- Video Camera
  - **Video quality** - Set video quality to: 4k UHD (rear camera only), HD 1080p (default), HD 720p, SD 480p, VGA, CIF, or QVGA.
  - **Video duration** - Set to: 30 seconds (MMS), 10 minutes (default), 30 minutes, or no limit.
  - **Noise Reduction** - Off, Fast, or High Quality (default).
  - **HEVC Encoder** - Save video recording using high efficiency video encoder for smaller file size.
  - **Audio Encoder** - Set the audio encoder to: AMRNB, or AAC (default).
  - **Video Rotation** - Set the rotation of the video to: 0 (default), 90, 180, or 270.
- System
  - **Restore defaults** - Select to restore all settings to the default values.
  - **About** - Displays the software version of the camera app.

Android 13 Camera and Video Settings

In Photo or Video mode, camera settings are displayed on the screen by touching ⚙ on the top right.

- **General** - These settings apply to both the still camera and video.
  - **Camera Sound** - Enable (default) or disable camera sounds.
  - **Location Tags** - Enable location information when pictures and videos are taken.
  - **Storage** - Photos and videos are stored on the phone.
  - **Dirty Lens Detection** - Enable to receive alerts when the camera lens is dirty.
  - **QR Code Mode** - Enable QR Code scanning with an option to open URLs via the browser (Rear camera and video only).
  - **Google Lens** - Enable Google-developed recognition technology that displays relevant information about identified objects within an image.
  - **Digital Level** - Enable digital guide to keep photos aligned.
  - **Face Detection** - Enable to turn on (or off).
  - **Gestures** - View gestures and power user controls. Gestures include **Swipe Down**, **Swipe Up**, **Side Swipe**, **Tap**, **Tap + Hold**, **Double Tap**, and **Hold Zoom**.

- **Still Camera** - These settings only apply to the still camera.
  - **Photo Grid** - Enable to apply a 3x3 grid guide to the camera viewport.
  - **Countdown timer** - Select **Off** (default), **3 seconds**, or **10 seconds**.
  - **Selfie Mirror** - Enable to save a mirror image of the photo (Front camera and video only).
  - **Picture size** - Set the size (in pixels) of the photo to **16M pixel** (default for rear camera/video), **8M pixels** (default for front camera/video), **5M pixels**, **WVGA**, **VGA**, or **QVGA**.
  - **Picture quality** - Set setting to **Low**, **Standard**, or **High** (default).
  - **Selfie Flash** - Enable to turn on the front-facing flash (Front camera and video only).
  - **Picture Format** - All still images are saved in **JPEG** (default) or **RAW + JPEG** format.
  - **MFNR** - Disabled (default) Multi-frame Noise Reduction improves picture quality in low-light conditions.
  - **AutoFocus Animation** - Enable the camera focus ring in the camera preview (Rear camera and video only).
- **Video Camera** - These settings only apply to the video camera.
  - **Video quality** - Set the video quality to **HD 1080p** (default), **HD 720p**, **SD 480p**, **VGA**, **CIF**, or **QVGA**.
  - **Video duration** - Set to **30 seconds (MMS)**, **10 minutes** (default), **30 minutes**, or **no limit**.
  - **Noise Reduction** - Set to **Off**, **Fast**, or **High Quality** (default).
  - **HEVC Encoder** - Enable to save video recording using a high-efficiency video encoder for a smaller file size.
  - **Audio Encoder** - Set the audio encoder to **AMRNB** or **AAC** (default).
  - **Video Rotation** - Set the rotation to **0** (default), **90** , **180**, or **270**.
- **System**
  - **Restore defaults** - Select to restore all settings to the default values.
  - **About** - Displays the software version of the camera app.

DWDemo

Use DataWedge Demonstration (DWDemo) to demonstrate data capture functionality. To configure DataWedge, go to techdocs.zebra.com/dwdemo/.

NOTE: DataWedge is disabled on the Home screen. To enable this feature, go to the **DataWedge** settings and enable **Barcode input** option.

DWDemo Icons

This table lists the icons available on the DWDemo app.

Table 11 DataWedge Demonstration Icons

Category	Icon	Description
Illumination		Imager illumination is on. Touch to turn illumination off.

Table 11 DataWedge Demonstration Icons (Continued)

Category	Icon	Description
Illumination		Imager illumination is off. Touch to turn illumination on.
Data capture		The data capture function is through the internal imager.
Data capture		The data capture function is through the rear camera.
Data capture		A Bluetooth scanner is connected.
Data capture		A Bluetooth scanner is not connected.
Scan mode		Imager is in picklist mode. Touch to change to normal scan mode.
Scan mode		Imager is in normal scan mode. Touch to change to picklist mode.
Menu		Opens a menu to view the application information or to set the application DataWedge profile.

Selecting a Scanner

See the Data Capture section for more information.

1. To select a scanner, touch ⋮ > **Settings** > **Scanner Selection**.
2. Press the programmable button or touch the yellow scan button to capture data.

   The data appears in the text field below the yellow button.

RxLogger

RxLogger is a comprehensive diagnostic tool that provides application and system metrics, and diagnoses device and application issues.

RxLogger logs the following information: CPU load, memory load, memory snapshots, battery consumption, power states, wireless logging, cellular logging, TCP dumps, Bluetooth logging, GPS logging, logcat, FTP push/pull, ANR dumps, etc. All generated logs and files are saved onto flash storage on the device (internal or external).

RxLogger logs the following information: CPU load, memory load, memory snapshots, battery consumption, power states, wireless logging, TCP dumps, Bluetooth logging, logcat, FTP push/pull, ANR dumps, etc. All generated logs and files are saved onto flash storage on the device (internal or external).

RxLogger Configuration

RxLogger is built with an extensible plug-in architecture and comes packaged with a number of plug-ins already built-in. For information on configuring RxLogger, go to techdocs.zebra.com/rxlogger/.

To open the configuration screen, from the RxLogger home screen, touch **Settings**.

Configuration File

All RxLogger settings are stored in a file on the device, permitting remote configuration and mass deployment of setting files using an enterprise mobile management (EMM) system.

IMPORTANT: The RxLogger configuration file is human-readable; however, it should not be edited by hand as doing so can lead to unpredictable behavior. Zebra recommends modifying RxLogger settings only through the RxLogger UI.

- File name: `config.json`
- Location: `/<internal_storage>/RxLogger`
- With external SD Card: `/storage/sdcard1/RxLogger`
- With no external SD Card: `/storage/sdcard0/RxLogger` When a new settings file is pushed to the device, RxLogger restarts all affected modules and applies the new settings immediately.

Copy the file from the device to a host computer using a USB connection. Edit the configuration file through the RxLogger UI and then replace the JSON file on the device. There is no need to stop and restart the RxLogger service because the file change is automatically detected.

Enabling Logging

1. Swipe the screen up and select .
2. Touch **Start**.

Disabling Logging

1. Swipe the screen up and select .
2. Touch **Stop**.

Extracting Log Files

1. Connect the device to a host computer using a USB connection.
2. Using a file explorer, navigate to the RxLogger folder.
3. Copy the file from the device to the host computer.
4. Disconnect the device from the host computer.

Backing Up Data

RxLogger Utility allows the user to make a zip file of the RxLogger folder in the device, which by default contains all the RxLogger logs stored in the device.

- To save the backup data, touch > **BackupNow**.

RxLogger Utility

RxLogger Utility is a data monitoring application for viewing logs in the device while RxLogger is running. Logs and RxLogger Utility features are accessed using Main Chat Head.

Initiating the Main Chat Head

1. Open **RxLogger**.
2. Touch ⋮ > **Toggle Chat Head**.

   The Main Chat Head icon appears on the screen.
3. Touch and drag the Main Chat Head icon to move it around the screen.

Removing the Main Chat Head

1. Touch and drag the icon.

   A circle with an X appears.
2. Move the icon over the circle and then release.

Viewing Logs

1. Touch the Main Chat Head icon.

   The RxLogger Utility screen displays.
2. Touch a log to open it.

   Open many logs with each displaying a new Sub Chat Head.
3. If necessary, scroll left or right to view additional Sub Chat Head icons.
4. Touch a Sub Chat Head to display the log contents.

Removing a Sub Chat Head Icon

- To remove a Sub Chat Head icon, press and hold the icon until it disappears.

Backing Up In Overlay View

RxLogger Utility allows the user to make a zip file of the RxLogger folder in the device, which by default contains all the RxLogger logs stored in the device.

The Backup icon is always available in Overlay View.

1. Touch 💾.

   The Backup dialog box appears.
2. Touch **Yes** to create the backup.

Data Capture

This section provides information for capturing barcode data using various scanning options.

The device supports data capture using:

- Integrated SE55 imager
- Integrated SE4720 imager
- Integrated camera
- RS507/RS507x Bluetooth Ring Scanner
- RS5100 Bluetooth Ring Scanner
- RS6000 Bluetooth Ring Scanner
- DS3678 Digital Scanner
- DS2278 Digital Scanner
- DS8178 Digital Scanner
- LI3678 Linear Scanner.

Imaging

The device with an integrated 2D imager has the following features:

- Omnidirectional reading of a variety of barcode symbologies, including the most popular linear, postal, PDF417, Digimarc, and 2D matrix code types.
- The ability to capture and download images to a host for a variety of imaging applications.
- Advanced intuitive laser aiming cross-hair and dot aiming for easy point-and-shoot operation.

The imager uses imaging technology to take a picture of a barcode, stores the resulting image in memory, and executes state-of-the-art software decoding algorithms to extract the barcode data from the image.

Digital Camera

The device with an integrated camera based barcode scanning solution has the following features:

- Omnidirectional reading of a variety of barcode symbologies, including the most popular linear, postal, QR, PDF417, and 2D matrix code types.
- Cross-hair reticle for easy point-and-shoot operation.

- Picklist mode to decode a particular barcode from many in the field of view.

The solution uses the advanced camera technology to take a digital picture of a barcode, and executes state-of-the-art software decoding algorithms to extract the data from the image.

Operational Modes

The device with an integrated imager supports three modes of operation.

Activate each mode by pressing **Scan**.

- Decode mode — The device attempts to locate and decode enabled barcodes within its field of view. The imager remains in this mode as long as you hold the scan button, or until it decodes a barcode.

NOTE: To enable Picklist Mode, configure in DataWedge or set in an application using an API command.

- Picklist mode — Selectively decode a barcode when more than one barcode is in the device's field of view by moving the aiming crosshair or dot over the required barcode. Use this feature for pick lists containing multiple barcodes and manufacturing or transport labels containing more than one barcode type (either 1D or 2D).

NOTE: To enable MultiBarcode Mode, configure in DataWedge or set in an application using an API command.

- MultiBarcode Mode — In this mode, the device attempts to locate and decode a specific number of unique barcodes within its field of view. The device remains in this mode as long as you hold the scan button, or until it decodes all the barcodes.
    - The device attempts to scan the programmed number of unique barcodes (from 2 through 100). This may be a fixed amount, meaning it scans X unique barcodes, or can be set as a range to scan a different number of unique barcodes each session.
    - If there are duplicate barcodes (same symbology type and data), only one of the duplicate barcodes is decoded and the remainder are ignored. If the label has two duplicate barcodes plus another two different barcodes, a maximum of three barcodes will be decoded from that label; one will be ignored as a duplicate.
    - Barcodes can be of multiple symbology types and still be acquired together. For example, if the specified quantity for a MultiBarcode Mode scan is four, two barcodes can be symbology type Code 128 and the other two can be symbology type Code 39.
    - If the specified number of unique barcodes is not initially in view of the device, the device will not decode any data until the device is moved to capture the additional barcode(s) or time out occurs. If the device field of view contains a number of barcodes greater than the specified quantity, the device randomly decodes barcode(s) until the specified number of unique barcodes is reached. For example, if the count is set to two and eight barcodes are in the field of view, the device decodes the first two unique barcodes it sees, returning the data in random order.
    - MultiBarcode Mode does not support concatenated barcodes.

Scanning Considerations

Typically, scanning is a simple matter of aim, scan, and decode, with a few quick trial efforts to master it.

However, consider the following to optimize scanning performance:

- Range — Scanners decode optimally over a particular working range — minimum and maximum distances from the barcode. This range varies according to barcode density and scanning device optics. Scan within range for quick and constant decodes; scanning too close or too far away prevents decodes. Move the scanner closer and further away to find the right working range for the barcodes being scanned.
- Angle — Scanning angle is important for quick decodes. When the illumination/flash reflects directly back into the imager, the specular reflection can blind/saturate the imager. To avoid this, scan the barcode so that the beam does not bounce directly back. Do not scan at too sharp an angle; the scanner needs to collect scattered reflections from the scan to make a successful decode. Practice quickly shows what tolerances to work within.
- Hold the device farther away for larger symbols.
- Move the device closer for symbols with bars that are close together.

NOTE: Scanning procedures depend on the app and device configuration. An app may use different scanning procedures from the one listed above.

Scanning with Internal Imager

Use the internal imager to capture barcode data.

1. Ensure that an application is open on the device and a text field is in focus (text cursor in text field).
2. Point the exit window of the device at a barcode.

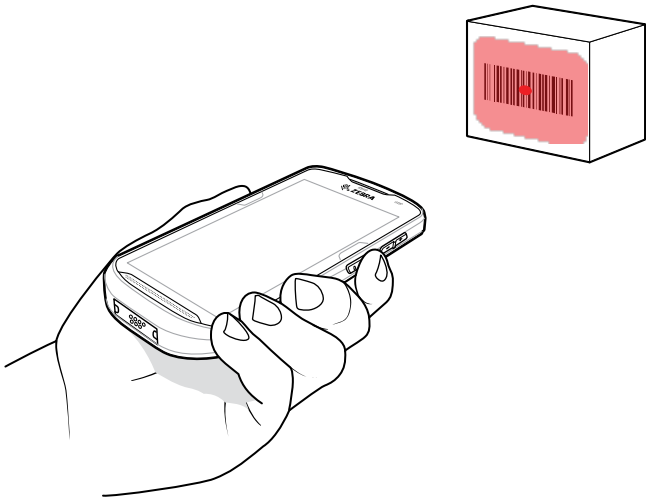

3. Press and hold the scan button. The red laser aiming pattern with red aiming dot turns on to asset in aiming.
4. Ensure the barcode is within the area formed by the aiming pattern. The aiming dot is used for increased visibility in bright lighting conditions.

Figure 12 SE4720 Aiming Pattern

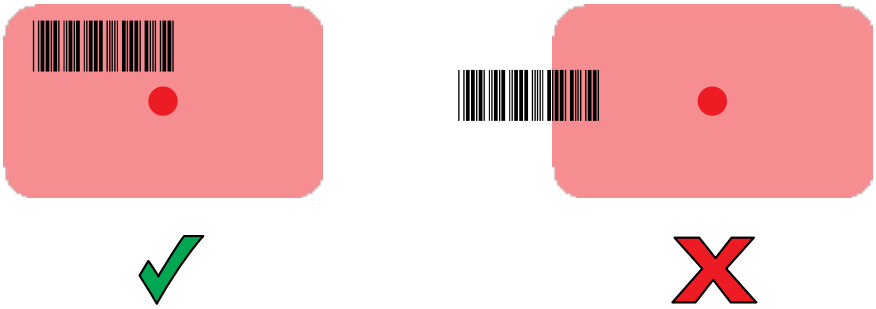

Figure 13 SE55 Aiming Pattern

Figure 14 SE4720 Aiming for Pick List Mode with Multiple Barcodes

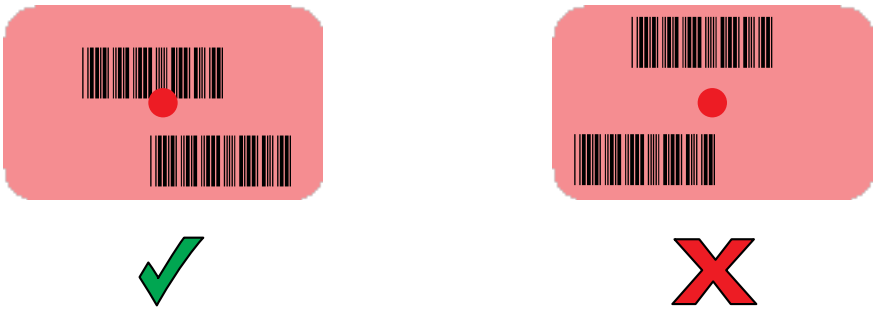

Figure 15 SE55 Aiming for Pick List Mode with Multiple Barcodes

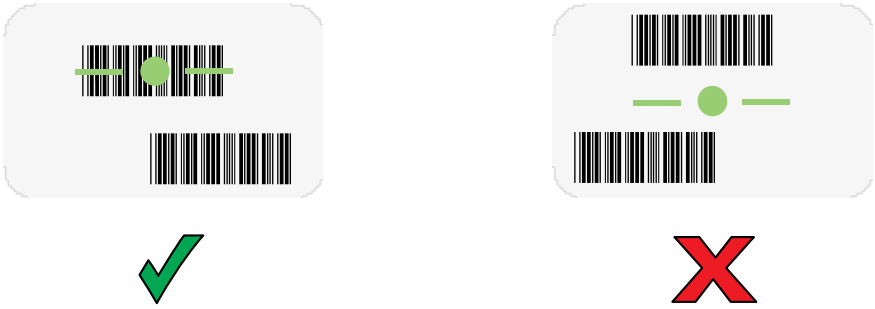

NOTE: When the device is in Pick List Mode, the device does not decode the barcode until the center of the crosshair touches the barcode.

The Data Capture LED light green and a beep sounds, by default, to indicate the barcode was decoded successfully.

5. Release the trigger.

   The barcode content data appears in the text field.

NOTE: The SE55 displays the green dash-dot-dash aimer. The SE4720 imager displays a red aimer.

Scanning with Internal Camera

Use the internal camera to capture barcode data.

NOTE: To read a barcode, a scan-enabled app is required. The device contains the DataWedge app that allows you to enable the scanner to decode barcode data and display the barcode content.

NOTE: The integrated camera is intended for light-duty barcode scanning. For heavy-duty scanning, 100 or more scans per day, use the 2D imager.

When capturing barcode data in poor lighting, turn on Illumination mode in the DataWedge application.

To scan with the internal camera:

1. Point the camera window at a barcode.

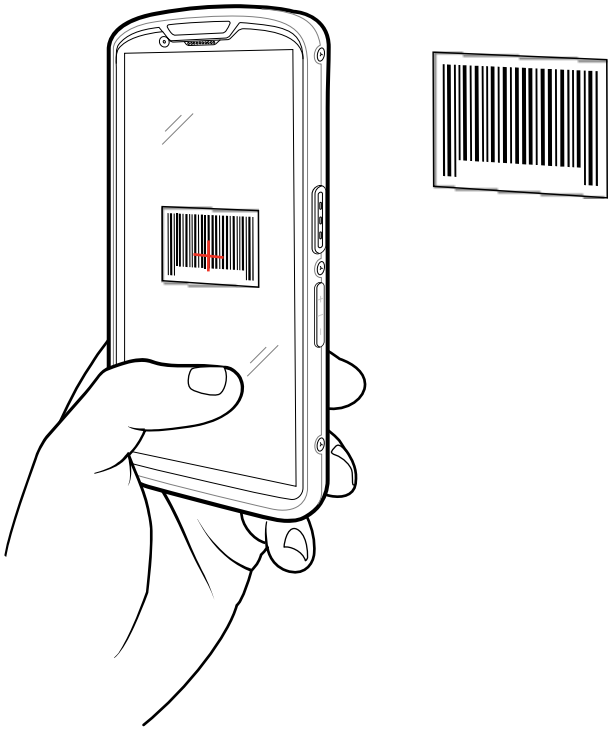

NOTE: When Picklist mode is enabled, move the device until the barcode is centered under the red target on the screen.

2. Point the camera window at a barcode.
3. Move the device until the barcode is visible on the screen.

4. The Decode LED lights green, a beep sounds and the device vibrates, by default, to indicate the barcode is decoded successfully.
5. The captured data appears in the text field.

Scanning with the RS507/RS507X Hands-Free Imager

Use the RS507/RS507X Hands-Free Imager to capture barcode data.

Figure 16 RS507/RS507X Hands-Free Imager

Refer to the RS507/RS507X Hands-free Imager Product Reference Guide for more information.

NOTE: To read a barcode, a scan-enabled app is required. The device contains the DataWedge app that allows you to enable the scanner to decode barcode data and display the barcode content.

To scan with the RS507/RS507x:

1. Pair the RS507/RS507X with the device.
2. Ensure that an app is open on the device and a text field is in focus (text cursor in text field).
3. Point the RS507/RS507X at a barcode.

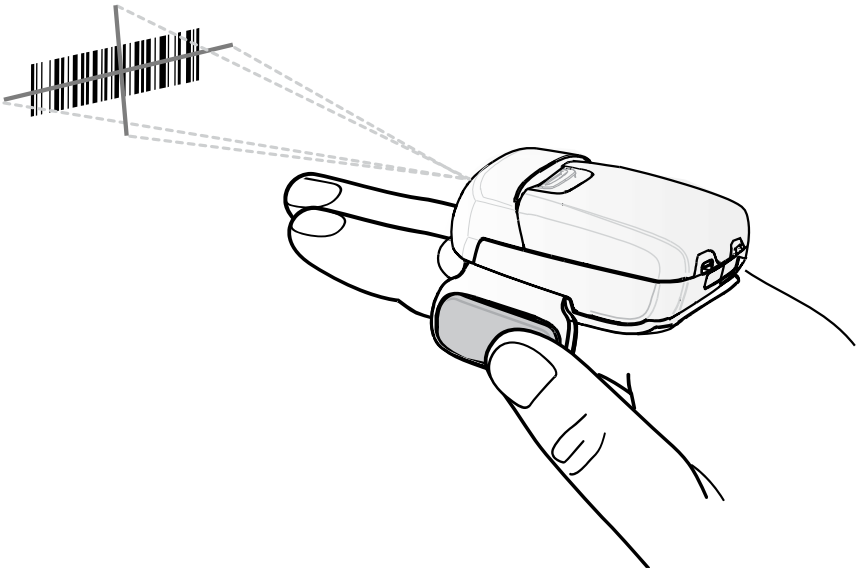

4. Press and hold the trigger.

   The red laser aiming pattern turns on to assist in aiming. Ensure the barcode is within the area formed by the cross-hairs in the aiming pattern. The aiming dot increases visibility in bright lighting conditions.

   Figure 17 RS507/RS507X Aiming Pattern

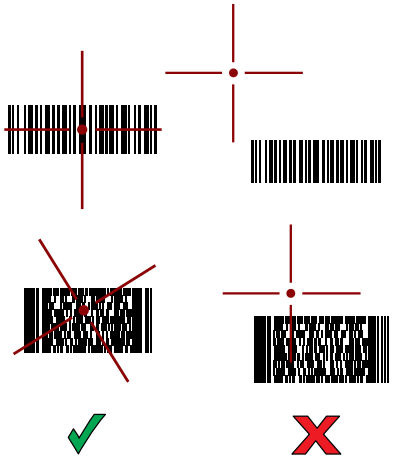

   When the RS507/RS507X is in Pick List mode, the RS507/RS507X does not decode the barcode until the center of the crosshair touches the barcode.

   Figure 18 RS507/RS507X Pick List Mode with Multiple Barcodes in Aiming Pattern

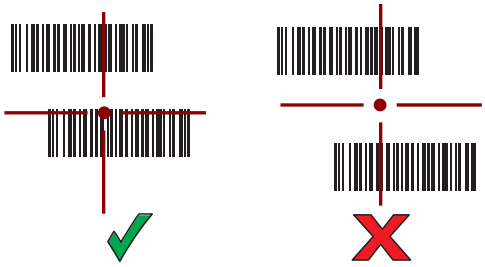

   The RS507/RS507X LEDs light green and a beep sounds to indicate the barcode was decoded successfully.

   The captured data appears in the text field.

Scanning with the RS5100 Ring Scanner

Use the RS5100 Ring Scanner to capture barcode data.

Figure 19 RS5100 Ring Scanner

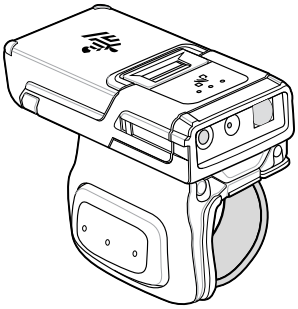

Refer to the RS5100 Ring Scanner Product Reference Guide for more information.

NOTE: To read a barcode, a scan-enabled app is required. The device contains the DataWedge app that allows you to enable the scanner to decode barcode data and display the barcode content.

To scan with the RS5100:

1. Pair the RS5100 with the device.
2. Ensure that an app is open on the device and a text field is in focus (text cursor in text field).
3. Point the RS5100 at a barcode.

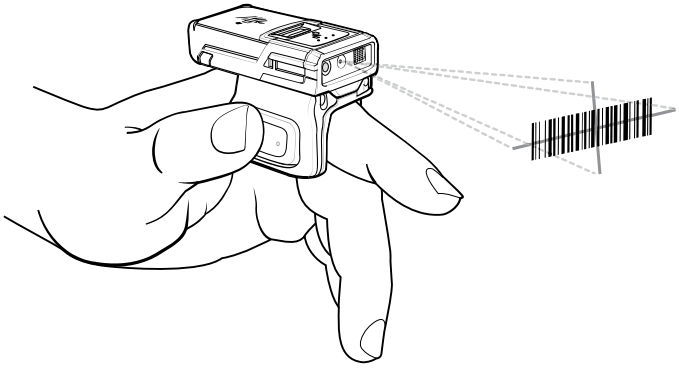

4. Press and hold the trigger.

   The red laser aiming pattern turns on to assist in aiming. Ensure the barcode is within the area formed by the cross-hairs in the aiming pattern. The aiming dot increases visibility in bright lighting conditions.

   Figure 20 RS5100 Aiming Pattern

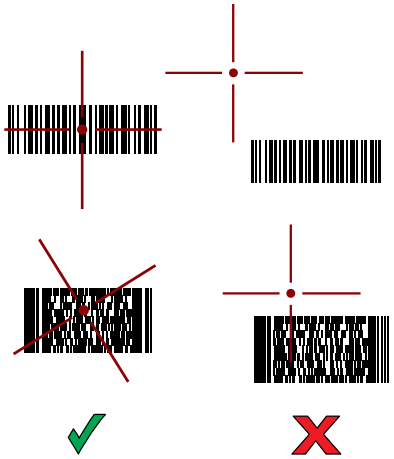

   When the RS5100 is in Pick List mode, the RS5100 does not decode the barcode until the center of the crosshair touches the barcode.

   Figure 21 RS5100 Pick List Mode with Multiple Barcodes in Aiming Pattern

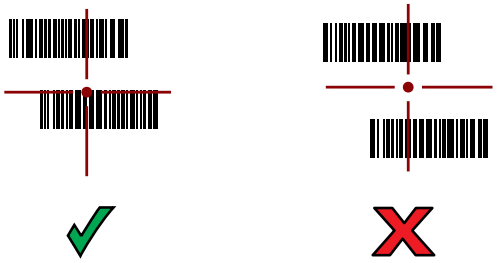

   The RS5100 LEDs light green and a beep sounds to indicate the barcode was decoded successfully.

   The captured data appears in the text field.

Scanning with the RS6000 Bluetooth Ring Scanner

Use the RS6000 Bluetooth Ring Scanner to capture barcode data.

Figure 22 RS6000 Bluetooth Ring Scanner

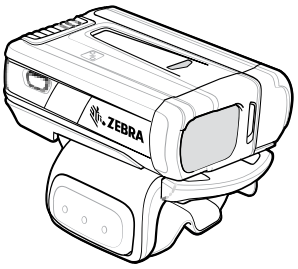

Refer to the RS6000 Bluetooth Ring Scanner Product Reference Guide for more information.

NOTE: To read a barcode, a scan-enabled app is required. The device contains the DataWedge app that enables you to use the scanner to decode barcode data and display the barcode content.

To scan with the RS6000:

1. Pair the RS6000 with the device.
2. Ensure that an app is open on the device and a text field is in focus (text cursor in text field).
3. Point the RS6000 at a barcode.

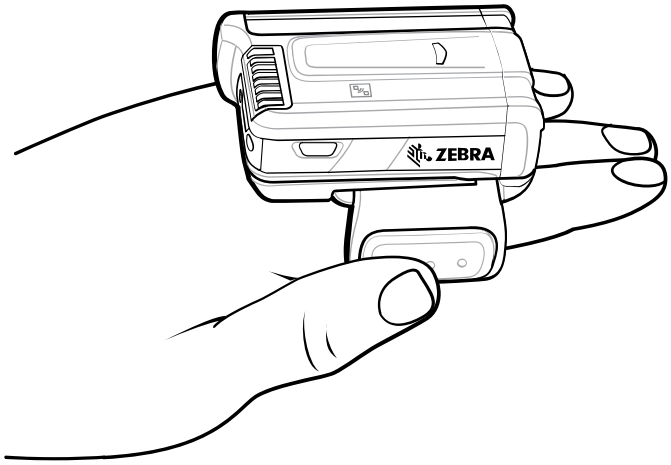

4. Press and hold the trigger.

   The red laser aiming pattern turns on to assist in aiming. Ensure the barcode is within the area formed by the cross-hairs in the aiming pattern. The aiming dot increases visibility in bright lighting conditions.

   Figure 23 RS6000 Aiming Pattern

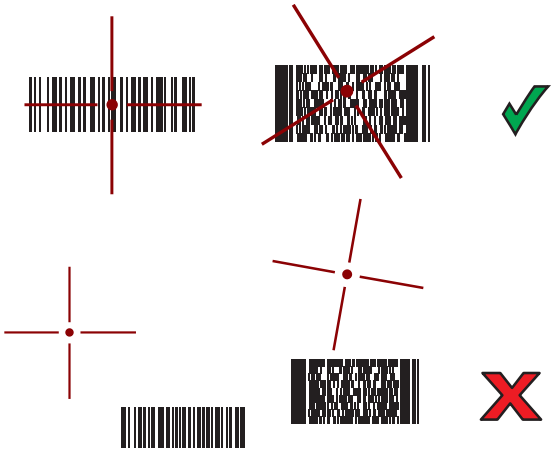

   When the RS6000 is in Pick List mode, the RS6000 does not decode the barcode until the center of the crosshair touches the barcode.

   Figure 24 RS6000 Pick List Mode with Multiple Barcodes in Aiming Pattern

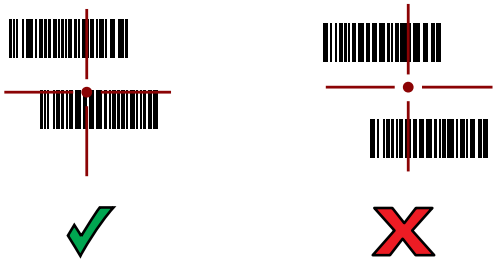

   The RS6000 LEDs light green and a beep sounds to indicate the barcode was decoded successfully.

   The captured data appears in the text field.

Scanning with the DS3678 Bluetooth Scanner

Use the DS3678 Bluetooth Scanner to capture barcode data.

Figure 25 DS3678 Digital Scanner

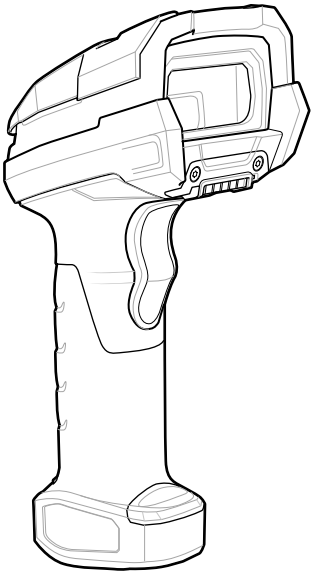

Refer to the DS3678 Product Reference Guide for more information.

NOTE: To read a barcode, a scan-enabled app is required. The device contains the DataWedge app that allows you to enable the scanner to decode barcode data and display the barcode content.

To scan with the DS3678 scanner:

1. Pair the scanner with the device. See Pairing Bluetooth Scanners for more information.
2. Ensure that an app is open on the device and a text field is in focus (text cursor in text field).

3. Point the scanner at a barcode.

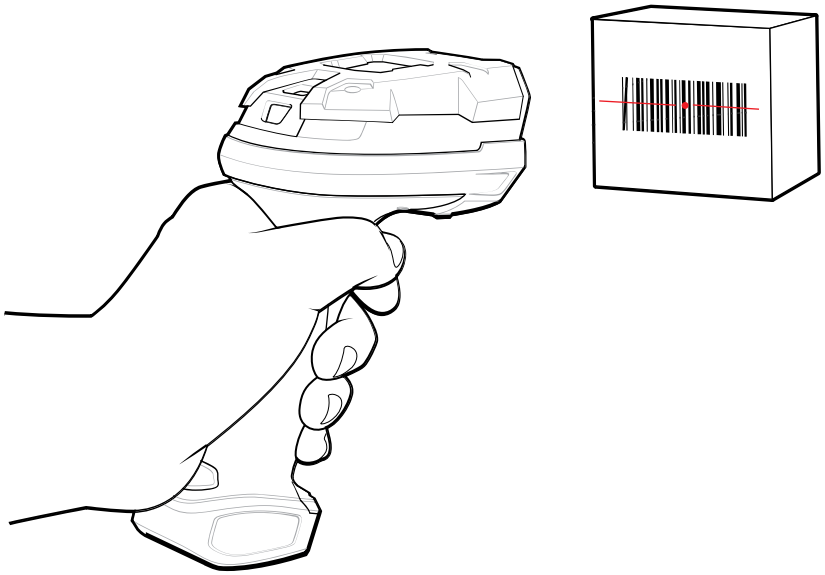

4. Press and hold the trigger.

   Ensure the barcode is within the area formed by the aiming pattern. The aiming dot increases visibility in bright lighting conditions.

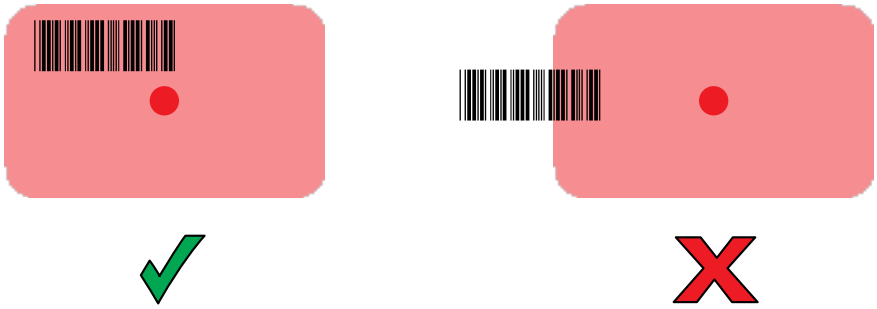

   The captured data appears in the text field.

Scanning with the LI3678 Linear Imager

Use the LI3678 linear imager to capture barcode data.

Figure 26 LI3678 Bluetooth Scanner

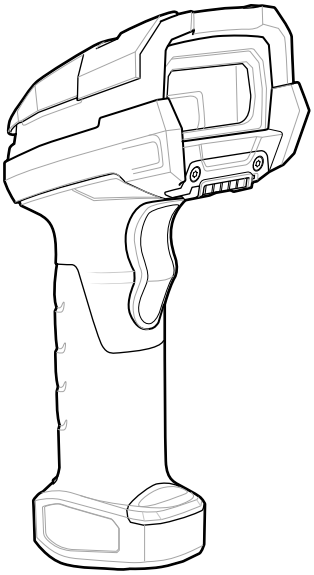

Refer to the LI3678 Product Reference Guide for more information.

NOTE: To read a barcode, a scan-enabled app is required. The device contains the DataWedge app that allows you to enable the scanner to decode barcode data and display the barcode content.

To scan with the LI3678:

1. Pair the LI3678 with the device. See Pairing a Bluetooth Scanner for more information.
2. Ensure that an app is open on the device and a text field is in focus (text cursor in text field).
3. Point the LI3678 at a barcode.
4. Press and hold the trigger.

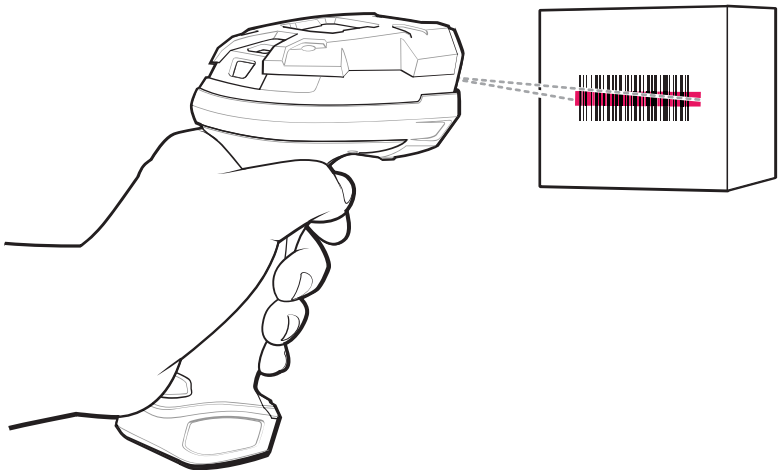

5. Ensure the aiming pattern covers the barcode.

Upon successful decode, the scanner beeps and the LED displays a single green flash.

The captured data appears in the text field.

Scanning with the DS2278 Digital Scanner

Use the DS2278 Digital Scanner to capture barcode data.

Figure 27 DS2278 Digital Scanner

Refer to the DS2278 Digital Scanner Product Reference Guide for more information.

NOTE: To read a barcode, a scan-enabled app is required. The device contains the DataWedge app that allows you to enable the scanner to decode barcode data and display the barcode content.

To scan with the DS2278:

1. Pair the DS2278 with the device. See Pairing a Bluetooth Scanner for more information.
2. Ensure that an app is open on the device and a text field is in focus (text cursor in text field).

3. Point the scanner at a barcode.

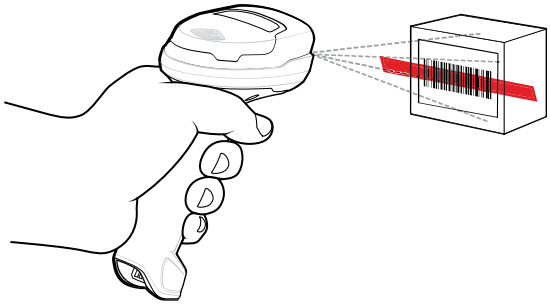

4. Press and hold the trigger.
5. Ensure the aiming pattern covers the barcode.

6. Upon successful decode, the scanner beeps and the LED flashes, and the scan line turns off.

   The captured data appears in the text field.

Scanning with the DS8178 Digital Scanner

Use the DS8178 Bluetooth Scanner to capture barcode data.

Figure 28 DS8178 Digital Scanner

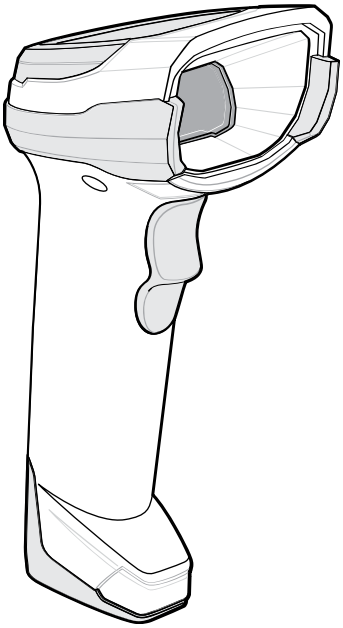

Refer to the DS8178 Digital Scanner Product Reference Guide for more information.

NOTE: To read a barcode, a scan-enabled app is required. The device contains the DataWedge app that allows you to enable the scanner to decode barcode data and display the barcode content.

To scan with the DS8178 scanner:

1. Pair the scanner with the device. See Pairing Bluetooth Scanners for more information.
2. Ensure that an app is open on the device and a text field is in focus (text cursor in text field).
3. Point the scanner at a barcode.

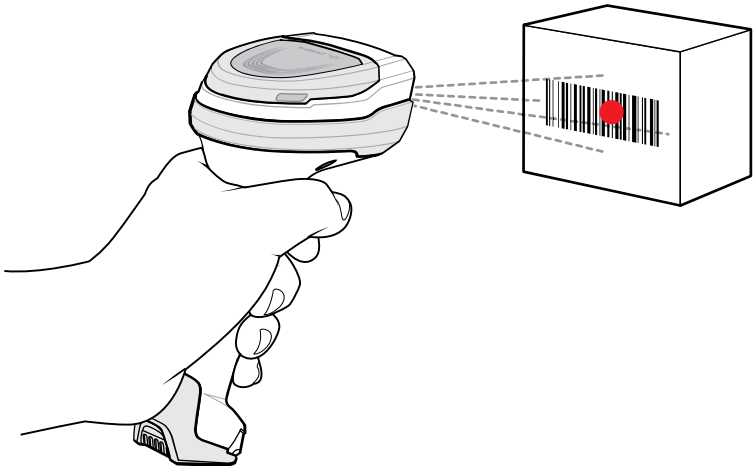

4. Press and hold the trigger.
5. Ensure the barcode is within the area formed by the aiming pattern. The aiming dot increases visibility in bright lighting conditions.

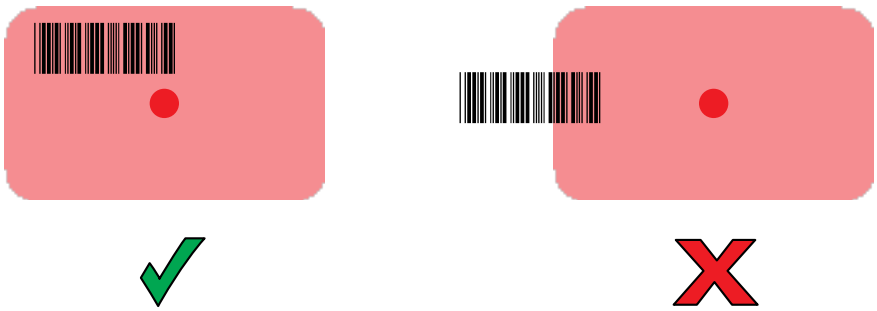

6. Upon successful decode, the scanner beeps and the LED flashes, and the scan line turns off. The captured data appears in the text field.

Pairing a Bluetooth Ring Scanner

Before using a Bluetooth Ring Scanner with the device, connect the device to the Ring Scanner.

To connect the Ring Scanner to the device, use one of the following methods:

- Near Field Communication (NFC)
- Simple Serial Interface (SSI)

- Bluetooth Human Interface Device (HID) Mode

Pairing in SSI Mode Using Near Field Communication

The device provides the ability to pair the RS5100 or RS6000 Ring Scanner in SSI Mode using NFC.

NOTE: RS5100 or RS6000 Only.

1. Ensure that NFC is enabled on the device.
2. Align the NFC icon on the Ring Scanner with the NFC antenna on the front of the device.

The Status LED blinks blue indicating that the Ring Scanner is attempting to establish a connection with the device. When a connection is established, the Status LED turns off and the Ring Scanner emits a single string of low/high beeps.

A notification appears on the device screen.

The icon appears in the Status bar.

Pairing in HID Mode Using Near Field Communication

The device provides the ability to pair NFC-capable ring scanners (such as the RS5100, RS6000, or RS6100) in HID Mode using NFC.

NOTE: NFC is supported on the premium configurations of the device. Not all Zebra devices support NFC readers and the Tap-to-Pair feature.

1. Ensure that NFC is enabled on the device.
2. Ensure that Bluetooth is enabled on both devices.
3. Ensure that the Bluetooth device to discover is in discoverable mode.
4. Ensure that the two devices are within 10 meters (32.8 feet) of one another.
5. Place the Ring Scanner in Human Interface Device (HID) mode. If the Ring Scanner is already in HID mode, skip to step 6.
   a) Remove the battery from the Ring Scanner.
   b) Press and hold the Restore key.
   c) Install the battery onto the Ring Scanner.
   d) Keep holding the Restore key for about five seconds until a chirp is heard and the Scan LEDs flash green.
   e) Scan the barcode below to place the Ring Scanner in HID mode.

   Figure 29 Bluetooth HID Barcode

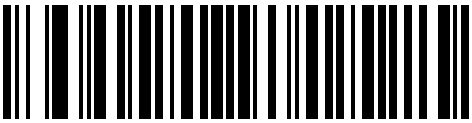

6. Remove the battery from the Ring Scanner.
7. Re-install the battery into the Ring Scanner.

Align the NFC icon on the Ring Scanner with the NFC antenna on the device.

8.

The Status LED blinks blue indicating that the Ring Scanner is attempting to establish a connection with the device. When a connection is established, the Status LED turns off and the Ring Scanner emits a single string of low/high beeps.

A notification appears on the device screen.

The icon appears in the Status bar.

Pairing Using Simple Serial Interface (SSI)

Pair the Ring Scanner to the device using Simple Serial Interface.

1. Swipe up from the bottom of the Home screen and touch .
2. Using the Ring Scanner, scan the barcode on the screen.

   The Ring Scanner emits a string of high/low/high/low beeps. The Scan LED flashes green indicating that the Ring Scanner is attempting to establish a connection with the device. When a connection is established, the Scan LED turns off and the Ring Scanner emits one string of low/high beeps.

   A notification appears on the Notification panel and the icon appears in the Status bar.

Pairing the Ring Scanner Using Bluetooth Human Interface Device

Pair the Ring Scanner to the device using Human Interface Device (HID).

1. Ensure that Bluetooth is enabled on both devices.
2. Ensure that the Bluetooth device to discover is in discoverable mode.
3. Ensure that the two devices are within 10 m (32.8 ft) of one another.

4. Place the Ring Scanner in HID mode. If the Ring Scanner is already in HID mode, skip to step 5.
   a) Remove the battery from the Ring Scanner.
   b) Press and hold **Restore**.
   c) Install the battery onto the Ring Scanner.
   d) Keep holding the Restore key for about five seconds until a chirp is heard and the Scan LEDs flash green.
   e) Scan the barcode below to place the Ring Scanner in HID mode.

Figure 30 RS507 Bluetooth HID Barcode

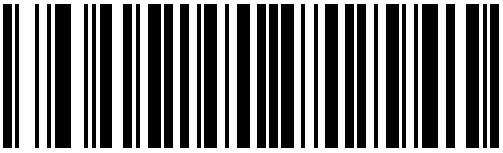

Figure 31 RS6000 Bluetooth HID Barcode

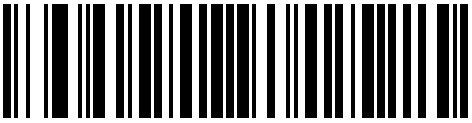

5. Remove the battery from the Ring Scanner.
6. Re-install the battery into the Ring Scanner.
7. Swipe down from the Status bar to open the Quick Access panel and then touch ⚙.
8. Touch **Bluetooth**.
9. Touch **Pair new device**. The device begins searching for discoverable Bluetooth devices in the area and displays them under **Available devices**.
10. Scroll through the list and select Ring Scanner.

    The device connects to the Ring Scanner and **Connected** appears below the device name. The Bluetooth device is added to the **Paired devices** list and a trusted (“paired”) connection is established.

    A notification appears on the Notification panel and the A icon appears in the Status bar.

Pairing a Bluetooth Scanner

Before using a Bluetooth scanner with the device, connect the device to the Bluetooth scanner.

Connect the scanner to the device using one of the following methods:

- Simple Serial Interface (SSI) mode
- Bluetooth Human Interface Device (HID) mode

Pairing Using Simple Serial Interface

Pair the Ring Scanner to the device using Simple Serial Interface.

1. Swipe up from the bottom of the Home screen and touch .

2. Using the Ring Scanner, scan the barcode on the screen.

   The Ring Scanner emits a string of high/low/high/low beeps. The Scan LED flashes green indicating that the Ring Scanner is attempting to establish a connection with the device. When a connection is established, the Scan LED turns off and the Ring Scanner emits one string of low/high beeps.

   A notification appears on the Notification panel and the icon appears in the Status bar.

Pairing in SSI Mode Using Near Field Communication

The device provides the ability to pair the RS5100 or RS6000 Ring Scanner in SSI Mode using NFC.

NOTE: RS5100 or RS6000 Only.

1. Ensure that NFC is enabled on the device.
2. Align the NFC icon on the Ring Scanner with the NFC antenna on the front of the device.

The Status LED blinks blue indicating that the Ring Scanner is attempting to establish a connection with the device. When a connection is established, the Status LED turns off and the Ring Scanner emits a single string of low/high beeps.

A notification appears on the device screen.

The icon appears in the Status bar.

DataWedge

DataWedge is a utility that adds advanced barcode scanning capability to any application without writing code. It runs in the background and handles the interface to built-in barcode scanners. DataWedge converts the captured barcode data to keystrokes and sends it to the target application as if it were typed on the keypad.

DataWedge allows any app on the device to get data from input sources such as a barcode scanner, MSR, RFID, voice, or serial port and manipulate the data based on options or rules.

Configure DataWedge to:

- Provide data capture services from any app.
- Use a particular scanner, reader, or other peripheral devices.
- Properly format and transmit data to a specific app.

To configure DataWedge, go to techdocs.zebra.com/datawedge/.

Enabling DataWedge

This procedure provides information on how to enable DataWedge on the device.

1. Swipe up from the bottom of the Home screen and touch .
2. Touch > **Settings**.
3. Touch the **DataWedge enabled** checkbox.

   A blue checkmark appears in the checkbox indicating that DataWedge is enabled.

Disabling DataWedge

This procedure provides information on how to disable DataWedge on the device.

1. Swipe up from the bottom of the Home screen and touch .
2. Touch .
3. Touch **Settings**.
4. Uncheck the **DataWedge enabled** checkbox.

Supported Decoders

This sections provides the supported decoders for each data capture option.

Camera Supported Decoders

This section lists the supported decoders for the internal camera.

Table 12 Camera-Supported Decoders

Decoder	Default State	Decoder	Default State	Decoder	Default State
Australian Postal	O	EAN8	X	MSI	O

Table 12 Camera-Supported Decoders (Continued)

Decoder	Default State	Decoder	Default State	Decoder	Default State
Aztec	X	Grid Matrix	O	PDF417	X
Canadian Postal	O	GS1 DataBar	X	QR Code	X
Chinese 2 of 5	O	GS1 DataBar Expanded	X	Decoder Signature	O
Codabar	X	GS1 DataBar Limited	O	TLC 39	O
Code 11	O	GS1 Datamatrix	O	Trioptic 39	O
Code 128	X	GS1 QRCode	O	UK Postal	O
Code 39	X	HAN XIN	O	UPCA	X
Code 93	O	Interleaved 2 of 5	O	UPCE0	X
Composite AB	O	Japanese Postal	O	UPCE1	O
Composite C	O	Korean 3 of 5	O	US4state	O
Discrete 2 of 5	O	MAIL MARK	X	US4state FICS	O
Datamatrix	X	Matrix 2 of 5	O	US Planet	O
Dutch Postal	O	Maxicode	X	US Postnet	O
DotCode	X	MicroPDF	O		
EAN13	X	MicroQR	O		

Key: X = Enabled, O = Disabled, - = Not Supported

SE4720 Internal Imager Supported Decoders

This section lists the supported decoders for the SE4720 internal imager.

Table 13 SE4720 Internal Imager-Supported Decoders

Decoder	Default State	Decoder	Default State	Decoder	Default State
Australian Postal	O	EAN8	X	MSI	O
Aztec	X	Grid Matrix	O	PDF417	X
Canadian Postal	O	GS1 DataBar	X	QR Code	X
Chinese 2 of 5	O	GS1 DataBar Expanded	X	Decoder Signature	O
Codabar	X	GS1 DataBar Limited	O	TLC 39	O
Code 11	O	GS1 Datamatrix	O	Trioptic 39	O

Table 13 SE4720 Internal Imager-Supported Decoders (Continued)

Decoder	Default State	Decoder	Default State	Decoder	Default State
Code 128	X	GS1 QRCode	O	UK Postal	O
Code 39	X	HAN XIN	O	UPCA	X
Code 93	O	Interleaved 2 of 5	O	UPCE0	X
Composite AB	O	Japanese Postal	O	UPCE1	O
Composite C	O	Korean 3 of 5	O	US4state	O
Discrete 2 of 5	O	MAIL MARK	X	US4state FICS	O
Datamatrix	X	Matrix 2 of 5	O	US Planet	O
Dutch Postal	O	Maxicode	X	US Postnet	O
DotCode	O	MicroPDF	O		
EAN13	X	MicroQR	O		

Key: X = Enabled, O = Disabled, - = Not Supported

SE55 Internal Imager Supported Decoders

This section lists the supported decoders for the SE55 internal imager.

Table 14 SE55 Internal Imager-Supported Decoders

Decoder	Default State	Decoder	Default State	Decoder	Default State
Australian Postal	O	EAN8	X	MSI	O
Aztec	X	Grid Matrix	O	PDF417	X
Canadian Postal	O	GS1 DataBar	X	QR Code	X
Chinese 2 of 5	O	GS1 DataBar Expanded	X	Decoder Signature	O
Codabar	X	GS1 DataBar Limited	O	TLC 39	O
Code 11	O	GS1 Datamatrix	O	Trioptic 39	O
Code 128	X	GS1 QRCode	O	UK Postal	O
Code 39	X	HAN XIN	O	UPCA	X
Code 93	O	Interleaved 2 of 5	O	UPCE0	X
Composite AB	O	Japanese Postal	O	UPCE1	O
Composite C	O	Korean 3 of 5	O	US4state	O
Discrete 2 of 5	O	MAIL MARK	X	US4state FICS	O

Table 14 SE55 Internal Imager-Supported Decoders (Continued)

Decoder	Default State	Decoder	Default State	Decoder	Default State
Datamatrix	X	Matrix 2 of 5	O	US Planet	O
Dutch Postal	O	Maxicode	X	US Postnet	O
DotCode	O	MicroPDF	O		
EAN13	X	MicroQR	O		

RS507/RS507x Supported Decoders

This section lists the supported decoders for the RS507/RS507x Ring Scanner.

Table 15 RS507/RS507x Supported Decoders

Decoder	Default State	Decoder	Default State	Decoder	Default State
Australian Postal	O	EAN8	X	MSI	O
Aztec	X	Grid Matrix	O	PDF417	X
Canadian Postal	-	GS1 DataBar	X	QR Code	X
Chinese 2 of 5	O	GS1 DataBar Expanded	X	Decoder Signature	O
Codabar	X	GS1 DataBar Limited	O	TLC 39	O
Code 11	O	GS1 Datamatrix	-	Trioptic 39	O
Code 128	X	GS1 QRCode	-	UK Postal	O
Code 39	O	HAN XIN	-	UPCA	X
Code 93	O	Interleaved 2 of 5	O	UPCE0	X
Composite AB	O	Japanese Postal	O	UPCE1	O
Composite C	O	Korean 3 of 5	O	US4state	O
Discrete 2 of 5	O	MAIL MARK	-	US4state FICS	O
Datamatrix	X	Matrix 2 of 5	O	US Planet	O
Dutch Postal	O	Maxicode	X	US Postnet	O
DotCode	O	MicroPDF	O		
EAN13	X	MicroQR	O		

Key: X = Enabled, O = Disabled, - = Not Supported

RS5100 Supported Decoders

This section lists the supported decoders for the RS5100 Ring Scanner.

Table 16 RS5100-Supported Decoders

Decoder	Default State	Decoder	Default State	Decoder	Default State
Australian Postal	O	EAN8	X	MSI	O
Aztec	X	Grid Matrix	O	PDF417	X
Canadian Postal	O	GS1 DataBar	X	QR Code	X
Chinese 2 of 5	O	GS1 DataBar Expanded	X	Decoder Signature	O
Codabar	X	GS1 DataBar Limited	O	TLC 39	O
Code 11	O	GS1 Datamatrix	O	Trioptic 39	O
Code 128	X	GS1 QRCode	O	UK Postal	O
Code 39	X	HAN XIN	O	UPCA	X
Code 93	O	Interleaved 2 of 5	O	UPCE0	X
Composite AB	O	Japanese Postal	O	UPCE1	O
Composite C	O	Korean 3 of 5	O	US4state	O
Discrete 2 of 5	O	MAIL MARK	X	US4state FICS	O
Datamatrix	X	Matrix 2 of 5	O	US Planet	O
Dutch Postal	O	Maxicode	X	US Postnet	O
DotCode	O	MicroPDF	O		
EAN13	X	MicroQR	O		

Key: X = Enabled, O = Disabled, - = Not Supported

RS6000 Supported Decoders

This section lists the supported decoders for the RS6000 Ring Scanner.

Table 17 RS6000-Supported Decoders

Decoder	Default State	Decoder	Default State	Decoder	Default State
Australian Postal	O	EAN8	X	MSI	O
Aztec	X	Grid Matrix	O	PDF417	X
Canadian Postal	O	GS1 DataBar	X	QR Code	X

Table 17 RS6000-Supported Decoders (Continued)

Decoder	Default State	Decoder	Default State	Decoder	Default State
Chinese 2 of 5	O	GS1 DataBar Expanded	X	Decoder Signature	O
Codabar	X	GS1 DataBar Limited	O	TLC 39	O
Code 11	O	GS1 Datamatrix	O	Trioptic 39	O
Code 128	X	GS1 QRCode	O	UK Postal	O
Code 39	X	HAN XIN	O	UPCA	X
Code 93	O	Interleaved 2 of 5	O	UPCE0	X
Composite AB	O	Japanese Postal	O	UPCE1	O
Composite C	O	Korean 3 of 5	O	US4state	O
Discrete 2 of 5	O	MAIL MARK	X	US4state FICS	O
Datamatrix	X	Matrix 2 of 5	O	US Planet	O
Dutch Postal	O	Maxicode	X	US Postnet	O
DotCode	O	MicroPDF	O		
EAN13	X	MicroQR	O		

Key: X = Enabled, O = Disabled, - = Not Supported

DS2278 Supported Decoders

This section lists the supported decoders for the DS2278 Digital Scanner.

Table 18 DS2278 Digital Scanner-Supported Decoders

Decoder	Default State	Decoder	Default State	Decoder	Default State
Australian Postal	O	EAN8	X	MSI	O
Aztec	X	Grid Matrix	O	PDF417	X
Canadian Postal	—	GS1 DataBar	X	QR Code	X
Chinese 2 of 5	O	GS1 DataBar Expanded	X	Decoder Signature	O
Codabar	X	GS1 DataBar Limited	O	TLC 39	O
Code 11	O	GS1 Datamatrix	O	Trioptic 39	O
Code 128	X	GS1 QRCode	O	UK Postal	O
Code 39	X	HAN XIN	—	UPCA	X

Table 18 DS2278 Digital Scanner-Supported Decoders (Continued)

Decoder	Default State	Decoder	Default State	Decoder	Default State
Code 93	O	Interleaved 2 of 5	O	UPCE0	X
Composite AB	O	Japanese Postal	O	UPCE1	O
Composite C	O	Korean 3 of 5	O	US4state	O
Discrete 2 of 5	O	MAIL MARK	X	US4state FICS	O
Datamatrix	X	Matrix 2 of 5	O	US Planet	O
Dutch Postal	O	Maxicode	X	US Postnet	O
DotCode	O	MicroPDF	O		
EAN13	X	MicroQR	O		

Key: X = Enabled, O = Disabled, — = Not Supported

DS3678 Supported Decoders

This section lists the supported decoders for the DS3678 scanner.

Table 19 DS3678-Supported Decoders

Decoder	Default State	Decoder	Default State	Decoder	Default State
Australian Postal	O	EAN8	X	MSI	O
Aztec	X	Grid Matrix	O	PDF417	X
Canadian Postal	—	GS1 DataBar	X	QR Code	X
Chinese 2 of 5	O	GS1 DataBar Expanded	X	Decoder Signature	—
Codabar	X	GS1 DataBar Limited	O	TLC 39	O
Code 11	O	GS1 Datamatrix	O	Trioptic 39	O
Code 128	X	GS1 QRCode	O	UK Postal	O
Code 39	X	HAN XIN	O	UPCA	X
Code 93	O	Interleaved 2 of 5	O	UPCE0	X
Composite AB	O	Japanese Postal	O	UPCE1	O
Composite C	O	Korean 3 of 5	O	US4state	O
Discrete 2 of 5	O	MAIL MARK	X	US4state FICS	O
Datamatrix	X	Matrix 2 of 5	O	US Planet	O
Dutch Postal	O	Maxicode	X	US Postnet	O

Table 19 DS3678-Supported Decoders (Continued)

Decoder	Default State	Decoder	Default State	Decoder	Default State
DotCode	O	MicroPDF	O		
EAN13	X	MicroQR	O		

Key: X = Enabled, O = Disabled, — = Not Supported

DS8178 Supported Decoders

This section lists the supported decoders for the DS8178 Digital scanner.

Table 20 DS8178 Digital Scanner-Supported Decoders

Decoder	Default State	Decoder	Default State	Decoder	Default State
Australian Postal	O	EAN8	X	MSI	O
Aztec	X	Grid Matrix	O	PDF417	X
Canadian Postal	—	GS1 DataBar	X	QR Code	X
Chinese 2 of 5	O	GS1 DataBar Expanded	X	Decoder Signature	—
Codabar	X	GS1 DataBar Limited	O	TLC 39	O
Code 11	O	GS1 Datamatrix	O	Trioptic 39	O
Code 128	X	GS1 QRCode	O	UK Postal	O
Code 39	X	HAN XIN	—	UPCA	X
Code 93	O	Interleaved 2 of 5	O	UPCE0	X
Composite AB	O	Japanese Postal	O	UPCE1	O
Composite C	O	Korean 3 of 5	O	US4state	O
Discrete 2 of 5	O	MAIL MARK	X	US4state FICS	O
Datamatrix	X	Matrix 2 of 5	O	US Planet	O
Dutch Postal	O	Maxicode	X	US Postnet	O
DotCode	O	MicroPDF	O		
EAN13	X	MicroQR	O		

Key: X = Enabled, O = Disabled, — = Not Supported

LI3678 Supported Decoders

This section lists the supported decoders for the LI3678 scanner.

Table 21 LI3678-Supported Decoders

Decoder	Default State	Decoder	Default State	Decoder	Default State
Australian Postal	—	EAN8	X	MSI	O
Aztec	—	Grid Matrix	O	PDF417	—
Canadian Postal	—	GS1 DataBar	X	QR Code	—
Chinese 2 of 5	O	GS1 DataBar Expanded	X	Decoder Signature	—
Codabar	X	GS1 DataBar Limited	O	TLC 39	O
Code 11	O	GS1 Datamatrix	—	Trioptic 39	O
Code 128	X	GS1 QRCode	—	UK Postal	—
Code 39	X	HAN XIN	O	UPCA	X
Code 93	O	Interleaved 2 of 5	O	UPCE0	X
Composite AB	—	Japanese Postal	—	UPCE1	O
Composite C	—	Korean 3 of 5	O	US4state	—
Discrete 2 of 5	O	MAIL MARK	—	US4state FICS	—
Datamatrix	—	Matrix 2 of 5	O	US Planet	—
Dutch Postal	—	Maxicode	—	US Postnet	—
DotCode	O	MicroPDF	—		
EAN13	X	MicroQR	—		

Key: X = Enabled, O = Disabled, — = Not Supported

Wireless

This section provides information on the wireless features of the device.

The following wireless features are available on the device:

- Wireless Wide Area Network (WWAN)
- Wireless Local Area Network (WLAN)
- Bluetooth
- Cast
- Near Field Communications (NFC)

Wireless Wide Area Networks

Use Wireless wide area networks (WWANs) to access data over a cellular network.

This section provides information on:

- Sharing a data connection
- Monitoring data usage
- Changing Cellular Network settings

Sharing the Mobile Data Connection

The **Hotspot & tethering** settings allow sharing the mobile data connection with a single computer via USB tethering or Bluetooth tethering.

Share the data connection with up to eight devices at once, by turning it into a portable Wi-Fi hotspot. While the device is sharing its data connection, an icon displays at the top of the screen and a corresponding message appears in the notification list.

Enabling USB Tethering

This section describes how to enable USB Tethering.

NOTE: USB tethering is not supported on computers running Mac OS. If the computer is running Windows or a recent version of Linux (such as Ubuntu), follow these instructions without any special preparation. If running a version of Windows that precedes Windows 7, or some other operating system, you may need to prepare the computer to establish a network connection via USB.

1. Connect the device to a host computer with a USB cable.

   The notification **Charging this device via USB** appears in the Notifications panel.
2. Go to **Settings** > **Network & internet** > **Hotspot & tethering**.
3. Touch the **USB tethering** toggle to enable the feature.

The host computer is now sharing the device's data connection.

To stop sharing the data connection, touch the **USB tethering** switch again or disconnect the USB cable.

Enabling Bluetooth Tethering

Use Bluetooth tethering to share the data connection with a host computer.

Configure the host computer to obtain its network connection using Bluetooth. For more information, see the host computer's documentation.

1. Touch **Hotspot & tethering**.
2. Pair the device with the host computer.
3. Go to **Settings**.
4. On Android 11, touch **Advanced** > **Hotspot & tethering**.
5. On Android 13, touch **Hotspot & tethering**.
6. Touch **Advanced**.

The host computer is now sharing the device's data connection.

To stop sharing the data connection, touch the **Bluetooth tethering** switch again.

Enabling Wi-Fi Hotspot

After configuring the device as a Wi-Fi hotspot, turn on Wi-Fi hotspot to begin using it.

1. Go to **Settings** > **Network & internet** > **Hotspot & tethering**.
2. Touch the **Wi-fi hotspot** toggle to enable the feature.

Configuring the Wi-Fi Hotspot

1. Go to **Settings**.
2. Touch **Networking & Internet**.
3. Touch **Hotspot & tethering**.
4. Touch **Wi-Fi hotspot**.
5. On Android 11, touch **Hotspot** name, edit the name for the hotspot.
6. On Android 13, touch **Hotspot** name, edit the name for the hotspot, touch **OK**.

7. Touch **Security** and select a security method from the drop-down list.
   - **WPA3-Personal, WPA2/WPA3-Personal** or **WPA2-Personal**
     a. Touch **Hotspot password**.
     b. Enter a password.
     c. Touch **OK**.
   - **None** - If **None** is selected in the Security option, a password is not required.
8. On Android 11, touch **Advanced**.
9. In the **AP Band** drop-down list, select **2.4 GHz Band, 5.0 GHz Band,** or **6.0 GHz Band**. (Android 11 only)
10. On Android 13, touch **AP Band** and select **2.4 Ghz Band** or **5.0 Ghz Band preferred**.
11. To change the Data Usage Warning & Limit for the TC58 only, go to **Settings** > **Networking & Internet** > **Mobile network** and select the **Data Warning & Limit**.
12. If desired, touch **Turn off hotspot automatically** to turn off Wi-Fi Hotspot when no devices are connected.
13. Select **Additional Settings** to configure Hotspot channel for chosen band, Maximum clients and connect devices.

Data Usage

Data usage refers to the amount of data uploaded or downloaded by the device during a given period. Depending on the wireless plan, you may be charged additional fees when your data usage exceeds your plan's limit.

Data usage settings allow you to:

- Enable Data Saver.
- Set the data usage warning level.
- Set a data usage limit.
- View or restrict data usage by app.
- Identify mobile hotspots and restrict background downloads that may result in extra charges.

Setting Data Usage Warning

Set a warning alert when the device has used a certain amount of mobile data.

1. Go to **Settings**.
2. Touch **Network & internet** > **Mobile network** > **Data usage** > ⚙.
3. If necessary, touch **Set data warning** to enable it.
4. Touch **Data warning**.
5. Enter a number.

   To switch between megabytes (MB) and gigabytes (GB), touch the down arrow.
6. Touch **SET**.

When the data usage reaches the set level, a notification appears.

Setting Data Limit

1. Go to **Settings**.
2. Touch **Network & internet** > **Mobile network** > **Data usage** > ⚙.
3. Touch **Set data limit**.
4. Touch **OK**.
5. Touch **Data limit**.
6. Enter a number.

   To switch between megabytes (MB) and gigabytes (GB), touch the down arrow.
7. Touch **Set**.

When the limit is reached, data automatically turns off and a notification appears.

Cellular Network Settings

Cellular network settings applies to TC58 WWAN devices only.

Data When Roaming

Roaming is disabled by default to prevent the device from transmitting data over other carriers' mobile networks when leaving an area that is covered by the carrier's networks. This is useful for controlling expenses if the service plan does not include data roaming.

Enabling Data on GSM Devices

1. Go to **Settings**.
2. Touch **Networking & Internet** > **Mobile network**.
3. Touch **Roaming**.

The switch moves to the on position.

Setting Preferred Network

Change the device network operating mode.

1. Go to **Settings**.
2. Touch **Network & Internet** > **Mobile network** > **Advanced**.
3. Touch **Automatically select network**.
4. Touch **Network**.
5. In the **Available network** list, select a carrier network.

Configuring the Access Point Name

To use the data on a network, configure the APN information.

NOTE: Many service provider Access Point Name (APN) data are pre-configured in the device. The APN information for all other service providers must be obtained from the wireless service provider.

1. Go to **Settings**.
2. Touch **Network & Internet** > **Mobile network** > **Advanced**.
3. Touch **Access Point Names**.
4. Touch an APN name in the list to edit an existing APN or touch **+** to create a new APN.
5. Touch each APN setting and enter the appropriate data obtained from the wireless service provider.
6. When finished, touch ⋮ > **Save**.
7. Touch the radio button next to the APN name to start using it.

Activating an eSIM

Activating an eSIM on the device.

Before adding an eSIM, contact your carrier to obtain the eSIM service and its activation or QR code.

NOTE: Ensure Airplane mode is turned **OFF**.

1. On the device, establish an internet connection via Wi-Fi or cellular data with an installed SIM card.
2. Go to **Settings**.
3. Touch **Network & internet** > **Mobile Networks**.
4. Touch **+** next to **SIMs** if a SIM card is already installed, or touch **SIMs** if there is no SIM card installed.

NOTE: A secure lock screen must be created or already in use to proceed.

   The **Mobile network** screen displays.

5. Select either:
   - **MANUAL CODE ENTRY** to enter the activation code, or
   - **SCAN** to scan the QR code to download the eSIM profile.

   The **Confirmation!!!** dialog box displays.
6. Touch **OK**.
7. Enter the activation code or scan the QR Code.

NOTE: If you are manually entering the activation code, you will have to select **Next** to proceed.

   The **Downloading a profile** message displays, followed by the **Use <Network Name>?** message.

8. Touch **ACTIVATE**.
9. Touch **Done**.

   The eSIM is now active.

Deactivating an eSIM

Turn off an eSIM temporarily and reactivate it later.

NOTE: Ensure Airplane mode is turned **OFF**.

1. Touch **Network & internet** > **SIMs**.
2. In the **Downloaded SIM** section, touch the name of the eSIM to deactivate.
3. Touch **Use SIM** switch to turn off the eSIM.
4. Touch **Yes**.

   The eSIM is deactivated.

Reactivating an eSim

Once the SIM is deactivated, you can reactivate it.

1. Touch **Use SIM** switch to turn on the eSIM.
2. Touch **Yes**.

   The eSIM is reactivated.

Erasing an eSIM Profile

Erasing an eSIM profile removes it completely from the device.

After erasing an eSIM from the device, you cannot use it again.

NOTE: Ensure Airplane mode is turned **OFF**.

1. Touch **Network & internet** > **SIMs**.
2. In the **Downloaded SIM** section, touch the name of the eSIM to erase.
3. Touch **Erase**.

NOTE: A secure lock screen must be created or already in use to proceed.

   The **Erase this downloaded SIM?** message displays.

4. Touch **Erase**.

   The eSIM profile is erased from the device.

Locking the SIM Card

Locking the SIM card requires you to enter a PIN every time the device is turned on. If the correct PIN is not entered, only emergency calls can be made.

1. Go to **Settings**.
2. Touch **Security** > **SIM card lock**.
3. Touch **Lock SIM card**.
4. Enter the PIN associated with the card.
5. Touch **OK**.
6. Reset the device.

Wireless Local Area Network

Wireless local area networks (WLANs) allow the device to communicate wirelessly inside a building. Before using the device on a WLAN, the facility must be set up with the required hardware to run the WLAN (sometimes known as infrastructure). The infrastructure and the device must both be properly configured to enable this communication.

NOTE: GTC authentication without a password (Dynamic GTC) requires a Mobility DNA Enterprise License.

Refer to the documentation provided with the infrastructure (access points (APs), access ports, switches, Radius servers, etc.) for instructions on how to set up the infrastructure.

Once the infrastructure is set up to enforce the chosen WLAN security scheme, use the **Wireless & networks** (Android 11 only) or **Network & Internet** (Android 13 only) on settings configure the device to match the security scheme.

- None
- Enhanced Open
- Wireless Equivalent Privacy (WEP)
- Wi-Fi Protected Access (WPA)/WPA2 Personal (PSK)
- WPA3-Personal
- WPA/WPA2/WPA3 Enterprise (EAP) (Android 11 only)
  - Extensible Authentication Protocol Method for Authentication and Key Agreement (AKA).
  - Improved Extensible Authentication Protocol Method for Authentication and Key Agreement (AKA').
  - Lightweight Extensible Authentication Protocol (LEAP).
  - Protected Extensible Authentication Protocol (PEAP) - with MSCHAPV2 and GTC authentication.
  - Transport Layer Security (TLS)
- WPA/WPA2-Enterprise (Android 13 only)
  - Extensible Authentication Protocol Method for Authentication and Key Agreement (AKA).
  - Improved Extensible Authentication Protocol Method for Authentication and Key Agreement (AKA').
  - Tunneled Transport Layer Security (TTLS) - with Password Authentication Protocol (PAP), MSCHAP, MSCHAPv2, and GTC authentication.
  - Protected Extensible Authentication Protocol (PEAP) - with MSCHAPV2 and GTC authentication.
  - Extensible Authentication Protocol Method for Subscriber Identity Module (SIM)
  - Extensible Authentication Protocol Method for Authentication and Key Agreement (AKA)
  - Improved Extensible Authentication Protocol Method for Authentication and Key Agreement (AKA')
  - Transport Layer Security (TLS)

- WPA3-Enterprise (Android 13 only)
  - Extensible Authentication Protocol Method for Authentication and Key Agreement (AKA).
  - Improved Extensible Authentication Protocol Method for Authentication and Key Agreement (AKA').
  - Tunneled Transport Layer Security (TTLS) - with Password Authentication Protocol (PAP), MSCHAP, MSCHAPv2, and GTC authentication.
  - Protected Extensible Authentication Protocol (PEAP) - with MSCHAPV2 and GTC authentication.
  - Extensible Authentication Protocol Method for Subscriber Identity Module (SIM)
  - Extensible Authentication Protocol Method for Authentication and Key Agreement (AKA)
  - Improved Extensible Authentication Protocol Method for Authentication and Key Agreement (AKA')
  - Transport Layer Security (TLS)
- Tunneled Transport Layer Security (TTLS) - with Password Authentication Protocol (PAP), MSCHAP and MSCHAPv2 authentication.

The device supports the following WLAN security options:

Connecting to a Wi-Fi Network

1. Touch **Network & internet**.
2. Go to **Settings**.
3. On Android 11, touch **Wi-Fi** to open the **Wi-Fi** screen. The device searches for WLANs in the area and lists them.
4. On Android 13, touch **Internet** to open the **Internet** screen. The device searches for WLANs in the area and lists them.
5. For open networks, touch the profile once or press and hold and then select **Connect** or for secure networks, enter the required password or other credentials, then touch **Connect**. See the system administrator for more information.

   The device obtains a network address and other required information from the network using the dynamic host configuration protocol (DHCP) protocol. To configure the device with a fixed internet protocol (IP) address, see Configuring the Device to Use a Static IP Address on page 129.
6. Touch **Internet** to open the **Internet** screen. The device searches for WLANs in the area and lists them.

Removing a Wi-Fi Network

Remove a remembered or connected Wi-Fi network.

1. Go to **Settings**.
2. Touch **Network & Internet**.
3. On Android 11, touch **Wi-Fi**.
4. On Android 13, touch **Internet**.
5. Scroll down to the bottom of the list and touch **Saved networks**.
6. Touch the name of the network.
7. Touch **FORGET**.

WLAN Configuration

This section provides information on configuring Wi-Fi settings.

Configuring a Secure Wi-Fi Network

1. Go to **Settings**.
2. Touch **Network & Internet**.
3. On Android 11, touch **Wi-Fi**.
4. On Android 13, touch **Internet**.
5. Slide the switch to the **ON** position.
6. The device searches for WLANs in the area and lists them on the screen.
7. Scroll through the list and select the desired WLAN network.
8. Touch the desired network. If network security is **None**, the device automatically connects to the network. For all other network security, a dialog box appears.
9. If network security is **WPA/WPA2-Personal**, **WPA3-Personal**, or **WEP**, enter the required password and then touch **Connect**.
10. If network security is **WPA/WPA2/WPA3 Enterprise**:
    a) Touch the **EAP method** drop-down list and select one of the following:
    - **PEAP**
    - **TLS**
    - **TTLS**
    - **PWD**
    - **SIM**
    - **AKA**
    - **AKA'**
    - **LEAP**

    b) Fill in the appropriate information. Options vary depending on the **EAP method** chosen.
    - When selecting **CA certificate**, Certification Authority (CA) certificates are installed using the **Security** settings.
    - When using the EAP methods PEAP, TLS, or TTLS, specify a domain.
    - Touch **Advanced options** to display additional network options.

Manually Adding a Wi-Fi Network

Manually add a Wi-Fi network if the network does not broadcast its name (SSID) or to add a Wi-Fi network when out of range.

1. Go to **Settings**.
2. Touch **Network & Internet**.
3. On Android 11, touch **Wi-Fi**.

4. On Android 13, touch **Internet**.
5. Slide the Wi-Fi switch to the **On** position.
6. Scroll to the bottom of the list and select **Add network**.
7. In the **Network name** text box, enter the name of the Wi-Fi network.
8. In the **Security** drop-down list, set the type of security to:
   - **None**
   - **Enhanced Open**
   - **WEP**
   - **WPA/WPA2-Personal**
   - **WPA3-Personal**
   - **WPA/WPA2/WPA3-Enterprise (Android 11 only)**
   - **WPA/WPA2-Enterprise (Android 13 only)**
   - **WPA3-Enterprise (Android 13 only)**
   - **WPA3-Enterprise 192-bit**
9. If the network security is **None** or **Enhanced Open**, touch **Save**.
10. If the network security is **WEP**, **WPA3-Personal**, or **WPA/WPA2-Personal**, enter the required password and then touch **Save**.

NOTE: By default, the network Proxy is set to None and the IP settings is set to DHCP. See Configuring for a Proxy Server for setting the connection to a proxy server and see Configuring the Device to Use a Static IP Address for setting the device to use a static IP address.

11. If network security is **WPA/WPA2/WPA3 Enterprise**:
    a) Touch the **EAP method** drop-down list and select one of the following:
       - **PEAP**
       - **TLS**
       - **TTLS**
       - **PWD**
       - **SIM**
       - **AKA**
       - **AKA'**
       - **LEAP**

    b) Fill in the appropriate information. Options vary depending on the **EAP method** chosen.
       - When selecting **CA certificate**, Certification Authority (CA) certificates are installed using the **Security** settings.
       - When using the EAP methods PEAP, TLS, or TTLS, specify a domain.
       - Touch **Advanced options** to display additional network options.
12. If the network security is WPA3-Enterprise 192-bit:
    - Touch **CA certificate** and select a Certification Authority (CA) certificate. Note: Certificates are installed using the Security settings.

- Touch **User certificate** and select a user certificate. Note: User certificates are installed using the Security settings.
- In the **Identity** text box, enter the username credentials.

13. Touch **Save**. To connect to the saved network, touch and hold on the saved network and select **Connect to network**.

Configuring for a Proxy Server

A proxy server is a server that acts as an intermediary for requests from clients seeking resources from other servers. A client connects to the proxy server and requests some service, such as a file, connection, web page, or other resource, available from a different server. The proxy server evaluates the request according to its filtering rules. For example, it may filter traffic by IP address or protocol. If the request is validated by the filter, the proxy provides the resource by connecting to the relevant server and requesting the service on behalf of the client.

It is important for enterprise customers to be able to set up secure computing environments within their companies, making proxy configuration essential. Proxy configuration acts as a security barrier ensuring that the proxy server monitors all traffic between the Internet and the intranet. This is normally an integral part of security enforcement in corporate firewalls within intranets.

1. Go to **Settings**.
2. Touch **Network & Internet**.
3. On Android 11, touch **Wi-Fi**.
4. On Android 13, touch **Internet**.
5. Slide the Wi-Fi switch to the **On** position.
6. In the network dialog box, select and touch a network.
7. If configuring the connected network, touch to edit the network details and then touch the down arrow to hide the keyboard.
8. Touch **Advanced options**.
9. Touch **Proxy** and select **Manual**.
10. In the **Proxy hostname** text box, enter the address of the proxy server.
11. In the **Proxy port** text box, enter the port number for the proxy server.
12. In the **Bypass proxy for** text box, enter addresses for web sites that are not required to go through the proxy server. Use a comma “,” between addresses. Do not use spaces or carriage returns between addresses.
13. If configuring the connected network, touch **Save** otherwise, touch **Connect**.
14. Touch **Connect**.

Configuring the Device to Use a Static IP Address

By default, the device is configured to use Dynamic Host Configuration Protocol (DHCP) to assign an Internet protocol (IP) address when connecting to a wireless network.

1. Go to **Settings**.
2. Touch **Network & Internet**.

3. On Android 11, touch **Wi-Fi**.
4. On Android 13, touch **Internet**.
5. Slide the Wi-Fi switch to the **On** position.
6. In the network dialog box, select and touch a network.
7. If configuring the connected network, touch to edit the network details and then touch the down arrow to hide the keyboard.
8. Touch **Advanced options**.
9. Touch **IP settings** and select **Static**.
10. In the **IP address** text box, enter an IP address for the device.
11. If required, in the **Gateway** text box, enter a gateway address for the device.
12. If required, in the **Network prefix length** text box, enter the prefix length.

Wi-Fi Preferences

Use the Wi-Fi preferences to configure advanced Wi-Fi settings. From the Wi-Fi screen, scroll down to the bottom of the screen and touch Wi-Fi preferences on Android 11 or Network preferences on Android 13.

- **Turn on Wi-Fi automatically** - When enabled, Wi-Fi automatically turns back on when near high-quality saved networks.
- **Open network notification** (Android 11 only) or **Notify for public networks** (Android 13 only) - When enabled, notifies the user when an open network is available.
- **Advanced** - Touch to expand options. (Android 11 only)
  - **Additional settings** - Touch to view additional Wi-Fi settings.
  - **Install Certificates** - Touch to install certificates.
  - **Network rating provider** - Disabled (AOSP devices). To help determine what constitutes a good Wi-Fi network, Android supports external Network rating providers that provide information about the quality of open Wi-Fi networks. Select one of the providers listed or **None**. If none are available or selected, the Connect to open networks feature is disabled. (Android 11 only)
  - **Wi-Fi Direct** - Displays a list of devices available for a direct Wi-Fi connection.

Additional Wi-Fi Settings

Use the Additional Settings to configure additional Wi-Fi settings.

NOTE: Additional Wi-Fi settings are for the device, not for a specific wireless network.

- **Regulatory**
  - **Country Selection** - Displays the acquired country code if 802.11d is enabled, else it displays the currently selected country code.
  - **Region code** - Displays the current region code.

- **Band and Channel Selection**
  - **Wi-Fi frequency band** - Set the frequency band to: **Auto** (default), **5 GHz only** or **2.4 GHz only**.
  - **Available channels (2.4 GHz)** - Touch to display the **Available channels** menu. Select specific channels and touch **OK**.
  - **Available channels (5 GHz)** - Touch to display the **Available channels** menu. Select specific channels and touch **OK**.
- **Logging**
  - **Logging** - Touch to enable advanced logging or change the log directory. (Android 11 only)
  - **Advanced Logging** - Touch to enable logging, enable Wi-Fi Verbose Logging, or change the log directory. (Android 13 only)
  - **Wireless logs** - Use to capture Wi-Fi log files.
    - **Fusion Logger** - Touch to open the **Fusion Logger** application. This application maintains a history of high level WLAN events which helps to understand the status of connectivity.
    - **Fusion Status** - Touch to display live status of WLAN state. Also provides information about the device and connected profile.
- **About**
  - **Version** - Displays the current version information. Touch the version to display addition version details.

Wi-Fi Direct

Wi-Fi Direct devices can connect to each other without having to go through an access point. Wi-Fi Direct devices establish their own ad-hoc network when required, letting you see which devices are available and choose which one to connect to.

1. Go to **Settings**.
2. Touch **Network & Internet**.
3. On Android 11, touch **Wi-Fi**.
4. On Android 13, touch **Internet**.
5. Slide the **Wi-Fi** switch to the **On** position.
6. On Android 11, scroll down to the bottom of the screen and touch **Wi-Fi preferences** > **Advanced** > **Wi-Fi Direct**. The device begins searching for another Wi-Fi Direct device.
7. On Android 13, scroll down to the bottom of the screen and touch **Wi-Fi preferences** > **Wi-Fi Direct**. The device begins searching for another Wi-Fi Direct device.
8. Under **Peer devices**, touch the other device name.
9. On the other device, select **Accept**.

   Connected displays on the device. On both devices, in their respective Wi-Fi Direct screens, the other device name displays in the list.

Bluetooth

Bluetooth devices can communicate without wires, using frequency-hopping spread spectrum (FHSS) radio frequency (RF) to transmit and receive data in the 2.4 GHz Industry Scientific and Medical (ISM)

band (802.15.1). Bluetooth wireless technology is specifically designed for short-range (10 m (32.8 ft)) communication and low power consumption.

Devices with Bluetooth capabilities can exchange information (for example, files, appointments, and tasks) with other Bluetooth enabled devices such as printers, access points, and other mobile devices.

The device supports Bluetooth Low Energy. Bluetooth Low Energy is targeted at applications in the healthcare, fitness, security, and home entertainment industries. It provides reduced power consumption and cost while maintaining standard Bluetooth range.

Adaptive Frequency Hopping

Adaptive Frequency Hopping (AFH) is a method of avoiding fixed frequency interferers, and can be used with Bluetooth voice. All devices in the piconet (Bluetooth network) must be AFH-capable in order for AFH to work. There is no AFH when connecting and discovering devices. Avoid making Bluetooth connections and discoveries during critical 802.11b communications.

AFH for Bluetooth consists of four main sections:

- Channel Classification - A method of detecting an interference on a channel-by-channel basis, or pre-defined channel mask.
- Link Management - Coordinates and distributes the AFH information to the rest of the Bluetooth network.
- Hop Sequence Modification - Avoids interference by selectively reducing the number of hopping channels.
- Channel Maintenance - A method for periodically re-evaluating the channels.

When AFH is enabled, the Bluetooth radio “hops around” (instead of through) the 802.11b high-rate channels. AFH coexistence allows enterprise devices to operate in any infrastructure.

The Bluetooth radio in this device operates as a Class 2 device power class. The maximum output power is 2.5 mW and the expected range is 10 m (32.8 ft). A definition of ranges based on power class is difficult to obtain due to power and device differences, and whether in open space or closed office space.

NOTE: It is not recommended to perform Bluetooth wireless technology inquiry when high rate 802.11b operation is required.

Security

The current Bluetooth specification defines security at the link level. Application-level security is not specified. This allows application developers to define security mechanisms tailored to their specific needs. Link-level security occurs between devices, not users, while application-level security can be implemented on a per-user basis. The Bluetooth specification defines security algorithms and procedures required to authenticate devices, and if needed, encrypt the data flowing on the link between the devices. Device authentication is a mandatory feature of Bluetooth while link encryption is optional.

Pairing of Bluetooth devices is accomplished by creating an initialization key used to authenticate the devices and create a link key for them. Entering a common personal identification number (PIN) in the devices being paired generates the initialization key. The PIN is never sent over the air. By default, the Bluetooth stack responds with no key when a key is requested (it is up to you to respond to the key request event). Authentication of Bluetooth devices is based upon a challenge-response transaction. Bluetooth allows for a PIN or passkey used to create other 128-bit keys used for security and encryption. The encryption key is derived from the link key used to authenticate the pairing devices. Also, the limited range and fast frequency hopping of the Bluetooth radios make long-distance eavesdropping difficult.

Recommendations are:

- Perform pairing in a secure environment.
- Keep PIN codes private and do not store the PIN codes in the device.
- Implement application-level security.

Bluetooth Profiles

The device supports the Bluetooth services listed.

Table 22 Bluetooth Profiles

Profile	Description
Advanced Audio Distribution Profile (A2DP)	Allows the device to stream stereo-quality audio to a wireless headset or wireless stereo speakers.
Audio/Video Remote Control Profile (AVRCP)	Allows the device to control A/V equipment to which a user has access. It may be used in concert with A2DP.
Dial Up Networking (DUN)	Provides a standard to access the Internet and other dial-up services over Bluetooth.
Generic Attribute Profile (GATT)	Provides profile discovery and description services for Bluetooth Low Energy protocol. It defines how attributes are grouped together into sets to form services.
Generic Access Profile (GAP)	Use for device discovery and authentication.
Human Interface Device Profile (HID)	Allows Bluetooth keyboards, pointing devices, gaming devices and remote monitoring devices to connect to the device.
Hands-Free Profile (HFP)	Allows car hands-free kits to communicate with the device in the car.
Headset Profile (HSP)	Allows a hands-free device, such as a Bluetooth headset, to place and receive calls on the device.
OBject EXchange (OBEX)	Facilitates the exchange of binary objects between devices.
Object Push Profile (OPP)	Allows the device to push and pull objects to and from a push server.
Out of Band (OOB)	Allows exchange of information used in the pairing process. Pairing is completed using the Bluetooth radio, but requires information from the OOB mechanism. Using OOB with NFC enables pairing when devices simply get close, rather than requiring a lengthy discovery process.
Personal Area Network (PAN)	Allows the use of Bluetooth Network Encapsulation Protocol to provide L3 networking capabilities over a Bluetooth link. Only PANU role is supported.
Phone Book Access Profile (PBAP)	Allows exchange of Phone Book Objects between a car kit and a mobile device to allow the car kit to display the name of the incoming caller; allow the car kit to download the phone book so you can initiate a call from the car display.
Serial Port Profile (SPP)	Allows use of RFCOMM protocol to emulate serial cable connection between two Bluetooth peer devices. For example, connecting the device to a printer.
Service Discovery Protocol (SDP)	Handles the search for known and specific services as well as general services.
Symbol Serial Interface (SSI)	Allows for communication with Bluetooth Imager.

Bluetooth Power States

The Bluetooth radio is off by default.

- **Suspend** - When the device goes into Sleep mode, the Bluetooth radio stays on.
- **Airplane Mode** -
  - Android A10 OS version and previous versions - When the device is placed in Airplane Mode, the Bluetooth radio turns off. When Airplane mode is disabled, the Bluetooth radio returns to the prior state. When in Airplane Mode, the Bluetooth radio can be turned back on if desired.
  - Android A11 OS version and versions onward - When the device is placed in Airplane Mode, the Bluetooth radio is not turned off when the device is connected to a Bluetooth headset or hearing device.
- **Airplane Mode** - When the device is placed in Airplane Mode, the Bluetooth radio is not turned off when the device is connected to a Bluetooth headset or hearing device.

Bluetooth Radio Power

Turn off the Bluetooth radio to save power or if entering an area with radio restrictions (for example, an airplane). When the radio is off, other Bluetooth devices cannot see or connect to the device. Turn on the Bluetooth radio to exchange information with other Bluetooth devices (within range). Communicate only with Bluetooth radios in close proximity.

NOTE: To achieve optimal battery life, turn off radios when not in use.

Enabling Bluetooth

1. Swipe down from the Status bar to open the Notification panel.
2. Touch the Bluetooth icon to enable (the Bluetooth icon is gray when it is disabled).

Disabling Bluetooth

This section describes the method for disabling Bluetooth.

1. Swipe down from the Status bar to open the Notification panel.
2. Touch ✱ to turn Bluetooth off.

Discovering Bluetooth Device(s)

The device can receive information from discovered devices without pairing. However, once paired, the device and a paired device exchange information automatically when the Bluetooth radio is on.

1. Ensure that Bluetooth is enabled on both devices.
2. Ensure that the Bluetooth device to discover is in discoverable mode.
3. Ensure that the two devices are within 10 m (32.8 ft) of one another.
4. Swipe down from the Status bar to open the Quick Access panel.
5. Touch and hold **Bluetooth**.

6. Touch **Pair new device**. The device begins searching for discoverable Bluetooth devices in the area and displays them under **Available devices**.
7. Scroll through the list and select a device. The Bluetooth pairing request dialog box displays.
8. Touch **Pair** on both devices.
9. The Bluetooth device is added to the **Paired devices** list and a trusted (“paired”) connection is established.

Changing the Bluetooth Name

By default, the device has a generic Bluetooth name that is visible to other devices when connected.

1. Go to **Settings**.
2. Touch **Connected devices** > **Connection preferences** > **Bluetooth**.
3. If Bluetooth is not on, move the switch to turn Bluetooth on.
4. Touch **Device name**.
5. Enter a name and touch **RENAME**.

Connecting to a Bluetooth Device

Once paired, connect to a Bluetooth device.

1. Go to **Settings**.
2. Touch **Connected devices** > **Connection preferences** > **Bluetooth**.
3. In the list, touch the unconnected Bluetooth device.

   When connected, **Connected** displays below the device name.

Selecting Profiles on the Bluetooth Device

Some Bluetooth devices have multiple profiles.

1. Go to **Settings**.
2. Touch **Connected devices** > **Connection preferences** > **Bluetooth**.
3. In the **Paired Devices** list, touch ⚙ next to the device name.
4. Turn on or off a profile to allow the device to use that profile.

Unpairing a Bluetooth Device

Unpairing a Bluetooth device erases all pairing information.

1. Go to **Settings**.
2. Touch **Connected devices** > **Connection preferences** > **Bluetooth**.
3. In the **Paired Devices** list, touch ⚙ next to the device name.
4. Touch **FORGET**.

Cast

Use **Cast** to mirror the device screen on a Miracast enabled wireless display.

1. Go to **Settings**.
2. Touch **Connected devices** > **Connection preferences** > **Cast**.
3. Touch ⋮ > **Enable wireless display**.

   The device searches for nearby Miracast devices and lists them.
4. Touch a device to begin casting.

Near Field Communication

NFC/HF RFID is a short-range wireless connectivity technology standard that enables a secure transaction between a reader and a contactless smartcard.

The technology is based on ISO/IEC 14443 type A and B, FeliCa (proximity) ISO/IEC 15693 (vicinity) standards, using the HF 13.56 MHz unlicensed band.

The device supports the following operating modes:

- Reader mode.
- Card Emulation mode.

The device also supports ECP polling.

Using NFC, the device can:

- Read contactless cards, such as contactless tickets, ID cards, and ePassport.
- Read and write information to contactless cards, such as SmartPosters and tickets, as well as devices with an NFC interface, such as vending machines.
- Read information from supported medical sensors.
- Pair with supported Bluetooth devices such as printers, ring scanners (for example, RS6000), and headsets (for example, HS3100).
- Emulate a contactless card such as a ticket.

The device's NFC antenna is positioned to read NFC cards from the top of the device while the device is being held.

Reading NFC Cards

Read contactless cards using NFC.

1. Launch an NFC-enabled application.

2. Hold the device as shown.

3. Move the card to the NFC antenna on the front of the device.
4. Move the device close to the NFC card until it detects the card.
5. Hold the card steadily until the transaction is complete (usually indicated by the application).

Enterprise NFC Settings

Improve NFC performance or increase battery life by selecting which NFC features to use on the device.

- **Card Detection Mode** - Select a card detection mode.
  - **Low** - Increases battery life by lowering the NFC detection speed.
  - **Hybrid** - Provides a balance between NFC detection speed and battery life (default).
  - **Standard** - Provides the best NFC detection speed, but reduces battery life (Mandatory setting for ECP Polling).
- **Supported Card Technology** - Select an option to detect only one NFC tag type, increasing battery life, but reducing detection speed.
  - **ISO 14443 Type A**
  - **ISO 14443 Type B**
  - **FeliCa**
  - **ISO15693**
- **NFC Debug Logging** - Use to enable or disable debug logging for NFC.
- **Other NFC settings available with Zebra administrator tools (CSP):**
  - **Communication speed for Type A and Type B cards and ISO 14443-4 cards** - Higher rate improves transaction speed.
  - **NDEF Support** - Improves card detection speed for non-NDEF cards.
  - **CPU Speed** - Boosts CPU speed during short NFC transactions, improves transaction speed.
  - **Card Emulation** - Enables workaround for Card Emulation interoperability issues.
  - **Reset to Factory Defaults** - Default settings are reset to factory defaults.

Calls

Make a phone call from the Phone app, the Contacts app, or other apps or widgets that display contact information.

NOTE: This section applies to WWAN TC58 devices only.

Emergency Calling

The service provider programs one or more emergency phone numbers, such as 911 or 999, that the user can call under any circumstances, even when the phone is locked, a SIM card is not inserted or the phone is not activated. The service provider can program additional emergency numbers into the SIM card. However, the SIM card must be inserted in the device in order to use the numbers stored on it. Talk to the service provider for additional information.

NOTE: Emergency numbers vary by country. The phone's pre-programmed emergency number(s) may not work in all locations, and sometimes an emergency call cannot be placed due to network, environmental, or interference issues

Audio Modes

The device offers three audio modes for use during phone calls.

- Handset Mode - Switch audio to the receiver at the top front of the device to use the device as a handset. This is the default mode.
- Speaker Mode - Use the device as a speakerphone.
- Headset Mode - Connect a Bluetooth or wired headset to automatically switch audio to the headset.

Bluetooth Headset

Use a Bluetooth headset for audio communication when using an audio-enabled app.

See Bluetooth for information on connecting a Bluetooth headset to the device. Set the volume appropriately before putting on the headset. When a Bluetooth headset is connected, the speakerphone is muted.

Wired Headset

Use a 3.5 mm wired headset (TC53 only) or USB-C wired headset and audio adapter for audio communication when using an audio-enabled app. Set the volume appropriately before putting on the headset. When a wired headset is connected, the speakerphone is muted.

To end a call using the wired headset, press and hold the headset button until the call ends.

Figure 32 3.5 mm Headset

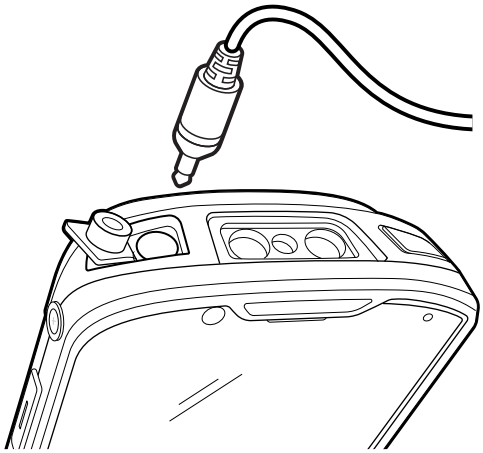

Figure 33 USB-C Headset

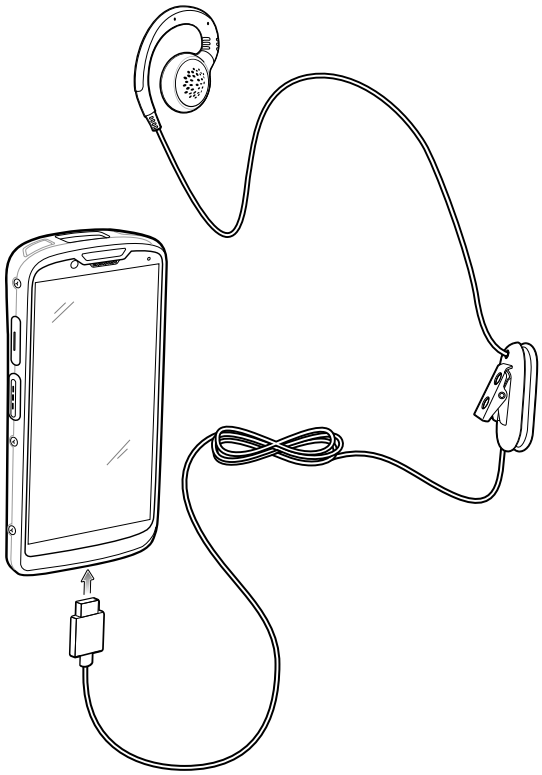

Adjusting Audio Volume

Use the volume buttons to adjust the phone volume.

- Ring and notification volumes when not in a call.
- Conversation volume during a call.

Making a Call Using the Dialer

Use the dialer tab to dial phone numbers.

1. On the Home screen touch .
2. Touch .
3. Touch the keys to enter the phone number.
4. Touch below the dialer to initiate the call.

	Send audio to the speakerphone.
	Mute the call.
	Display the dial pad.
	Place the call on hold (not available on all services).
	Create a conference call.
	Increase audio level.

5. Touch to end the call.

   If using a Bluetooth headset, additional audio options are available. Touch the audio icon to open the audio menu.

	Audio is routed to the Bluetooth headset.
	Audio is routed to the speakerphone.
	Audio is routed to the earpiece.

Accessing Dialing Options

The dialer provides options to save the dialed number to contacts, send an SMS, or insert pauses and wait into the dial string.

- Enter at least one digit in the dialer, then touch ⋮.
  - **Add 2–sec pause** - Pause the dialing of the next number for two seconds. Multiple pauses are added sequentially.
  - **Add wait** - Wait for confirmation to send the rest of the digits.

Make a Call Using Contacts

There are two ways to make a call using contacts, using the Dialer or using the Contacts app.

Using the Dialer

1. On the Home screen touch .
2. Touch .
3. Touch the contact.
4. Touch to initiate the call.

	Send audio to the speakerphone.
	Mute the call.
	Display the dial pad.
	Place the call on hold (not available on all services).
	Create a conference call.
	Increase audio level.

5. Touch to end the call.

   If using a Bluetooth headset, additional audio options are available. Touch the audio icon to open the audio menu.

	Audio is routed to the Bluetooth headset.
	Audio is routed to the speakerphone.

	Audio is routed to the earpiece.

Using the Contacts App

1. Touch .
2. Touch a contact name.
3. Touch to initiate the call.

Make a Call Using Call History

Call History is a list of all the calls placed, received, or missed. It provides a convenient way to redial a number, return a call, or add a number to Contacts.

Arrow icons beside a call indicate the type of call. Multiple arrows indicate multiple calls.

Table 23 Call Type Indicators

Icon	Description
	Missed incoming call
	Received incoming call
	Outgoing call

Using the Call History List

1. On the Home screen touch .
2. Touch the tab.
3. Touch next to the contact to initiate the call.
4. Touch the contact to perform other functions.
5. Touch to end the call.

Making a Conference Call on GSM

Create a conference phone session with multiple people.

NOTE: Conference Calling and the number of conference calls allowed may not be available on all services. Please check with the service provider for Conference Calling availability.

1. On the Home screen touch .
2. Touch .
3. Touch the keys to enter the phone number.

4. Touch below the dialer to initiate the call.
5. When the call connects, touch .

   The first call is placed on hold.
6. Touch .
7. Touch the keys to enter the second phone number.
8. Touch below the dialer to initiate the call.

   When the call connects, the first call is placed on hold and the second call is active.
9. Touch to create a conference call with three people.
10. Touch to add another call.

    The conference is placed on hold.
11. Touch .
12. Touch the keys to enter another phone number.
13. Touch below the dialer to initiate the call.
14. Touch icon to add the third call to the conference.
15. Touch **Manage conference call** to view all callers.

	Remove a caller from the conference.
	Speak privately with one party during a conference call.
	Include all parties again.

Making a Call Using a Bluetooth Headset

1. Pair the Bluetooth headset with the device.
2. Press the Call button on the Bluetooth headset.
3. Press the Call button on the Bluetooth headset to end the call.

Answering Calls

When receiving a phone call, the **Incoming Call** screen displays the caller ID and any additional information about the caller that is in the **Contacts** app.

NOTE: Not all options are available for all configurations.

To modify phone call settings, on the Home screen touch > > **Settings**.

- Touch **ANSWER** to answer the call or **DECLINE** to send the caller to voice mail.

  If the screen lock is enabled, the user can answer the call without unlocking the device.

- When a call arrives:
  - Touch and slide up to answer the call.
  - Touch and slide down to send the call to voice mail.
  - Touch to open a list of quick text responses. Touch one to send it to the caller immediately.

  When the calls ends, the device remains locked.

  If using a Bluetooth headset when a call arrives, touch the Call button on the Bluetooth headset to answer the call. To end the call press the headset Call button.

  All incoming calls are recorded in the Phone app Call log tab. If you miss a call, you receive a notification. To silence the ringer before answering the call, press the volume down button on the side of device.

Call Settings

To modify phone call settings, on the Home screen touch > > **Settings**.

NOTE: Not all options are available for all configurations

- **Display options**
  - **Sort by** - Set to **First name** or **Last name**.
  - **Name format** - Set to **First name first** or **Last name first**.
- **Sounds and vibrations** - Touch to edit the general sound settings for the device.
- **Quick responses** - Touch to edit quick responses to use instead of answering a call.
- **Speed dial settings** - Set speed dial contact shortcuts.

- **Calling accounts**
  - **Settings** - Touch a mobile provider to display options for that provider.
    - **Fixed Dialing Numbers** - Set to only allow the phone to dial the phone number(s) or area code(s) specified in a Fixed Dialing list.
    - **Call forwarding** - Set to forward incoming calls to a different phone number.

NOTE: Call Forwarding may not be available on all networks. Check with the service provider for availability.

    - **Additional Settings**
      - **Caller ID** - Set caller ID to reveal the identity of the person making an outgoing call. Options: Network default (default), Hide number, Show number.
      - **Call waiting** - Set to be notified of an incoming call while on a call.
  - **SIP accounts** - Choose to receive Internet calls for accounts added to the device, view or change SIP accounts, or add an Internet calling account.
  - **Use SIP calling** - Set to **For all calls** or **Only for SIP calls** (default).
  - **Receive incoming calls** - Enable to allow incoming calls (default - disabled).
  - **Wi-Fi calling** - Enable to allow Wi-Fi calling and set the Wi-Fi calling preference (default - disabled).
  - **Call barring** - Set to block certain types of incoming or outgoing calls.
- **Blocked numbers** - Set to block calls and texts from certain phone numbers. Touch ADD A NUMBER to block a phone number.
- **Voicemail** - Configure voicemail settings.
  - **Notifications** - Configure voicemail notification settings.
    - **Importance** - Set the notification importance to Urgent, High (default), Medium, or Low.
    - **Alerting** - Touch to receive sound and vibration notifications when a voicemail is received. Use toggle switches to enable or disable Pop on screen, Blink light, Show notification dot, and Override Do Not Disturb.
    - **Silent** - Touch to silence sound and vibration notifications when a voicemail is received. Use toggle switches to enable or disable Minimize, Show notification dot, and Override Do Not Disturb.
    - **Sound** - Select a sound to play for notifications from this app.
    - **Vibrate** - Allow notifications from this app to vibrate the device.
    - **Blink light** - Allow notifications from this app the light the Notification LED blue.
    - **Show notification dot** - Allow notifications from this app to add a notification dot to the app icon.
    - **Override Do Not Disturb** - Allow these notifications to interrupt when Do Not Disturb is enabled.
  - **Advanced Settings**
    - **Service** - Set the service provider or other provider for voicemail service.
    - **Setup** - Select to update the phone number used to access voicemail.

- **Accessibility**
  - **Hearing aids** - Select to enable hearing air compatibility.
  - **RTT settings** - Configure Real-time text (RTT) settings.
    - **Real-time text (RTT) call** - Select to allow messaging during a call.
    - **Set RTT visibility** - Set to Visible during calls (default) or Always visible.

Accessories

This section provides information for using the accessories for the device.

Device Accessories

This section provides information for using the accessories for the device. The table below lists the accessories available for the device.

Table 24 Accessories

Accessory	Part Number	Description
Cradles		
2-Slot (1 Device/1 Spare Battery) Charge Only Cradle Kit	CRD-NGTC5-2SC1B	Provides device and spare battery charging. Includes cradle, power supply (PWR-BGA12V50W0WW) and DC line cord.
2-Slot (1 Device/1 Spare Battery) USB/ Ethernet Capable Charger	CRD-NGTC5-2SE1B	Provides device and spare battery charging, and USB and Ethernet communication. Includes cradle, power supply (PWR-BGA12V50W0WW) and DC line cord. **NOTE:** The Ethernet module is sold separately.
4-Slot Battery Charger Kit	SAC-NGTC5TC7-4SCHG	Charges up to four spare batteries. Includes cradle, power supply (PWR-BGA12V50W0WW) and DC line cord.
5-Slot Charge Only Cradle with Battery Charger Kit	CRD-NGTC5-5SC4B	Charges up to four devices and four spare batteries. Includes cradle, power supply (PWR-BGA12V108W0WW) and DC line cord.
5-Slot Charge Only Cradle Kit	CRD-NGTC5-5SC5D	Charges up to five devices. Includes, cradle, power supply (PWR-BGA12V108W0WW) and DC line cord.
5-Slot Ethernet Cradle Kit	CRD-NGTC5-5SE5D	Provides device charging and provides Ethernet communication for up to five devices. Includes cradle, power supply (PWR-BGA12V108W0WW) and DC line cord.

Table 24 Accessories (Continued)

Accessory	Part Number	Description
Wireless Charging Vehicle Cradle	CRD-TC58-WCVC-01	For mounting, windshield suction mount RAM-B-166U required (sold separately). **NOTE:** Must be used with wireless charging battery (sold separately); For TC58 Premium configurations only.
Vehicle Holder	CRD-TC5NG-NCCD-01	Passive no charge vehicle holder.
Cradle Mount	BRKT-SCRD-SMRK-01	Mounts the 5-Slot Charge Only Cradle, 5-Slot Ethernet Cradle, and 4-Slot Battery Charger to a wall or rack.
Cradle Cup Replacement	CRDCUP-NGTC5TC7	Replacement cup for cradle.
USB-Ethernet Adapter	KT-TC51-ETH1-01	Provides USB and Ethernet communication with the 1-Slot USB/Charge Only Cradle Kit.
Batteries		
Standard Battery	BTRY-NGTC5TC7-44MA-01	Standard 4680 mAh battery.
Standard Battery BLE	BTRY-NGTC5TC7-44MABLE-01	Standard 4680 mAh BLE battery.
High Capacity Battery	BTRY-NGTC5TC7-66MA-01	Higher capacity 7000 mAh battery.
Wireless Charging Battery (TC58 premium only)	BTRY-NGTC5TC7-44MAWC-01	Wireless charging 4680 mAh battery.
Payment Battery	BTRY-NGTC5TC7-PYMT	Charging 4680 mAh battery. Allows integration to PD20 credit card readers.
Charge and Communication Cables		
USB-C Communication and Charge Cable	CBL-TC5X-USBC2A-01	Provides UBC-A to USB-C communication and power to the device.
Audio Accessories		
3.5 mm Audio Adapter	CBL-TC51-HDST35-01	Plugs into the device and provides audio to a wired headset with collared 3.5 mm plug (TC53 only).
USB-C Headset	HDST-USBC-PTT1-01	USB-C audio headset with PTT.
Miscellaneous		
Rugged Boot	SG-NGTC5EXO1-01	Provides additional protection for the device.
Trigger Handle	TRG-NGTC5-ELEC-01	Adds gun-style handle with a scanner trigger for comfortable and productive scanning. Requires Rugged Boot.
Screen Protector	SG-NGTC5-SCRNP-03	Adds additional screen protection (3–pack).
Soft Holster	SG-NGTC5TC7-HLSTR-01	Used to hold the device on hip. Accepts device with and without the Rugged Boot and Trigger Handle.

Table 24 Accessories (Continued)

Accessory	Part Number	Description
Hand Strap	SG-NGTC5TC7-HDSTP-03	Replacement hand strap with hand strap mounting clip (3-pack).
Wrist Mount Adapter	SG-NGTC5-WMADP1-01	Wrist mount adapter, black, dial strap length 191 mm.
	SG-NGTC5-WMADP1-02	Wrist mount adapter, black, dial strap length 265 mm.
Tether	SG-TC5NGTC7NG-TETHR-03	Stylus tether connects stylus to device or hand strap (3-pack).
Stylus	SG-STYLUS-TCX-MTL-03	Stylus for touch screen use.
Power Supplies		
Power Supply	PWR-BGA12V50W0WW	Provides power to the 1-Slot USB Charge cradle and 4-Slot Spare Battery Charger. Requires AC line cord.
Power Supply	PWR-BGA12V108W0WW	Provides power to the 4-Slot Charge Only Cradle with battery Charger, 5-Slot Charge Only cradle and the 5-Slot Ethernet Cradle. Requires DC Line Cord, p/n 50–16002–029R and country specific three wire grounded AC line cord sold separately.
Power Supply	PWR-WUA5V12W0US	Provides 5 VDC, 2.5 A power to the Rugged Charge/USB cable. Includes plug adapter for use in the United States.
Power Supply	PWR-WUA5V12W0GB	Provides 5 VDC, 2.5 A power to the Rugged Charge/USB cable. Includes plug adapter for use in the United Kingdom.
Power Supply	PWR-WUA5V12W0EU	Provides 5 VDC, 2.5 A power to the Rugged Charge/USB cable. Includes plug adapter for use in the European Union.
Power Supply	PWR-WUA5V12W0AU	Provides 5 VDC, 2.5 A power to the Rugged Charge/USB cable. Includes plug adapter for use in Australia.
Power Supply	PWR-WUA5V12W0CN	Provides 5 VDC, 2.5 A power to the Rugged Charge/USB cable. Includes plug adapter for use in China.
Power Supply	PWR-WUA5V12W0IN	Provides 5 VDC, 2.5 A power to the Rugged Charge/USB cable. Includes plug adapter for use in India.
Power Supply	PWR-WUA5V12W0KR	Provides 5 VDC, 2.5 A power to the Rugged Charge/USB cable. Includes plug adapter for use in Korea.
Power Supply	PWR-WUA5V12W0BR	Provides 5 VDC, 2.5 A power to the Rugged Charge/USB cable. Includes plug adapter for use in Brazil.

Table 24 Accessories (Continued)

Accessory	Part Number	Description
DC Line Cord	CBL-DC-381A1-01	Provides power from the power supply (PWR-BGA12V108W0WW) to the 4-Slot Charge Only Cradle with Battery Charger, 5-Slot Charge Only Cradle and 5-Slot Ethernet Cradle.
DC Line Cord	CBL-DC-388A1-01	Provides power from the power supply (PWR-BGA12V50W0WW) to the 1-Slot USB/Charge Only Cradle and 4-Slot Battery Charger.
2-way DC Cable	CBL-DC-523A1-01	Connects one power supply (PWR-BGA12V108W0WW) to two 4-Slot Battery Chargers.
US AC Line Cord	23844-00-00R	Provide power to power supplies.

Main Battery Charging

The device's Charging/Notification LED indicates the status of the battery charging in the device. See Charging Indicators for device charging status. The battery charges from fully depleted to 90% in approximately 2 hours.

NOTE: In many cases the 90% charge provides plenty of charge for daily use. A full 100% charge lasts for approximately 8 to 14 hour, depending on use case.

To achieve fast charging results use only Zebra charging accessories and batteries. Charge batteries at room temperature with the device in sleep mode.

Spare Battery Charging

The Spare Battery Charging LED on the cup indicates the status of the spare battery charging. The battery charges from fully depleted to 90% in approximately 2.3 hours.

NOTE: In many cases the 90% charge provides plenty of charge for daily use. A full 100% charge lasts for approximately 14 hours of use.

To achieve optimal fast charging results use only Zebra charging accessories and batteries.

Table 25 Spare battery LED Charging Indicators

Indication	LED	Description
Solid amber		Spare battery is charging.
Solid amber with alternate bright amber		Best spare battery is charging. Not available on 2-Slot USB/Ethernet Cradle.
Solid Green		Spare battery charging is complete.

Table 25 Spare battery LED Charging Indicators (Continued)

Indication	LED	Description
Solid Green with alternate bright green		Best spare battery charging is complete. Not available on 2-Slot USB/ Ethernet Cradle.
Solid Red		Spare battery is charging and battery is at the end of useful life. Charging complete and battery is at the end of useful life.
Fast Blinking Red (2 blinks/ second)		Error in charging; check placement of spare battery and battery is at the end of useful life.
Off		No spare battery in slot. Spare battery not placed in slot correctly. Cradle is not powered.

Charging Temperature

Charge batteries in temperatures from 5°C to 40°C (41°F to 104°F). The device or cradle always performs battery charging in a safe and intelligent manner. At higher temperatures (for example: approximately +37°C (+98°F)) the device or cradle may for small periods of time alternately enable and disable battery charging to keep the battery at acceptable temperatures. The device and cradle indicates when charging is disabled due to abnormal temperatures via its LED.

Charging the Device in the Cradle

To charge the device:

NOTE: If the device has a Rugged Boot, ensure the shim inserted in the cradle cup is for the device with boot.

IMPORTANT: By default, the device includes an interface connector. If the interface connector is removed for USB Type C cable connectivity, then it must be replaced before charging or receiving an Ethernet IP address if placed in a cradle.

1. Insert the device into the slot to begin charging.

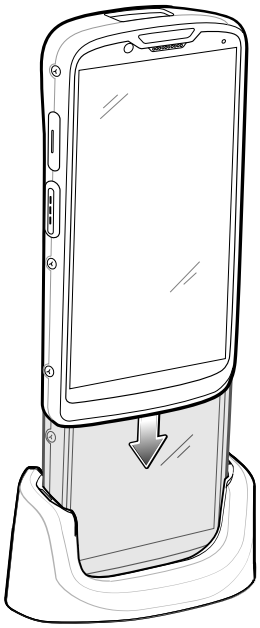

2. Ensure that the device is properly seated.

Inserting a TC5X Shim into Cradle

Each cradle cup has a shim that must be inserted prior to inserting the device. There is a shim for the standalone device and a different shim for the device plus Boot for charging in a cradle cup.

To install the shim, insert the shim straight down into the cradle cup until it clicks in place.

Figure 34 Insert Shim in Cradle Cup

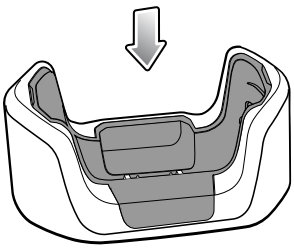

To remove the shim, pinch both sides in and pull up.

Figure 35 Remove Shim from Cradle Cup

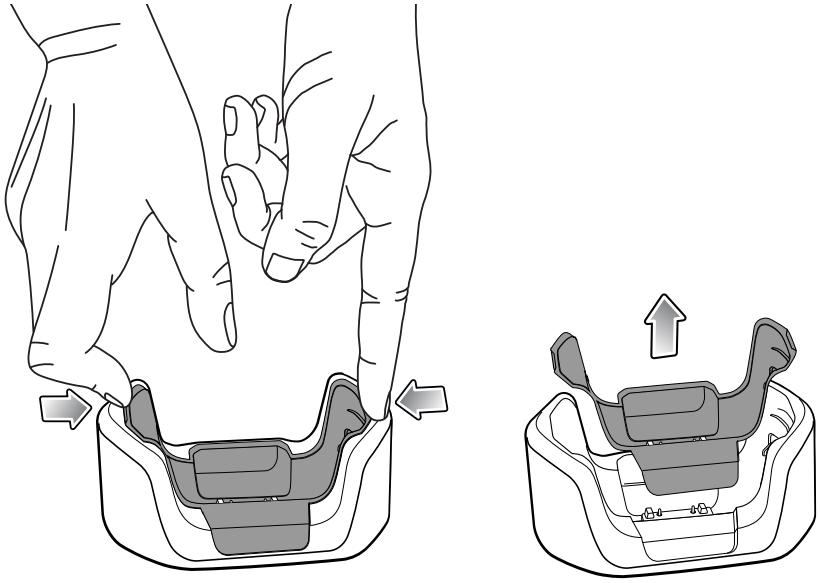

2-Slot (1 Device/1 Spare Battery) USB Cradle

The 2-Slot USB Cradle provide power and host communications.

CAUTION: Ensure that you follow the guidelines for battery safety described in Battery Safety Guidelines.

The 1-Slot USB Charge Cradle:

- Provides 5 VDC power for operating the device.
- Charges the device's battery.
- Provides USB communication with host computer.

Figure 36 2–Slot USB Charge Cradle

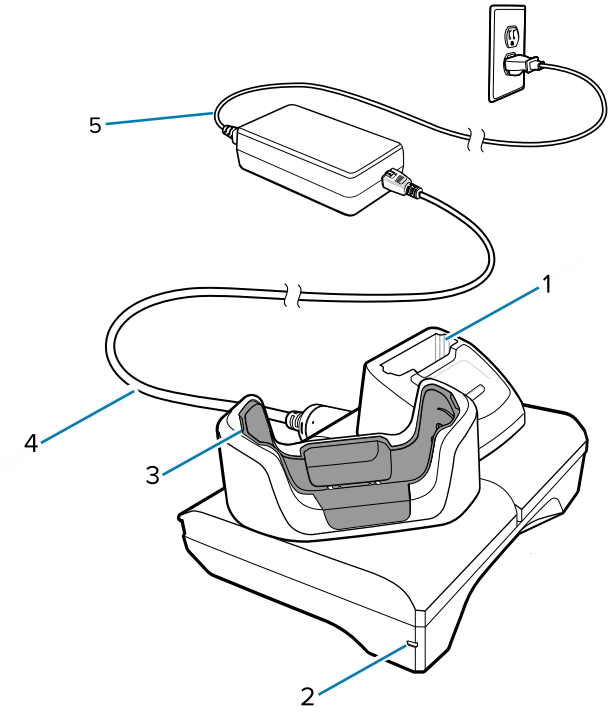

1	Spare battery charging slot
2	Power LED
3	Device charging slot with shim
4	DC power supply
5	AC line cord

2-Slot (1 Device/1 Spare Battery) Ethernet and Communication Setup

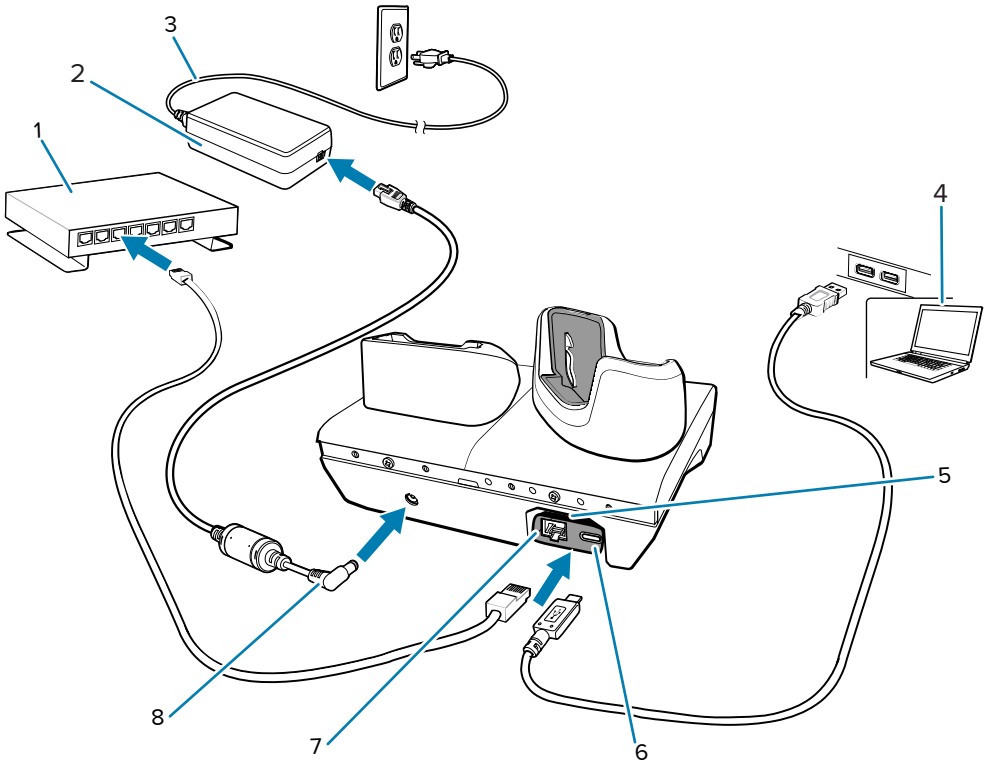

1	Ethernet switch
2	Power Supply
3	AC line cord
4	Host computer
5	USB to Ethernet module kit (sold separately)
6	USB port (on USB to Ethernet module kit)
7	Ethernet port (on USB to Ethernet module kit)
8	DC line cord

NOTE: The USB to Ethernet module kit (KT-TC51-ETH1-01) connects via a single-slot USB charger.

Ethernet Settings

The following settings can be configured when using Ethernet communication:

- Proxy Settings
- Static IP.

Configuring Ethernet Proxy Setting

The device includes Ethernet cradle drivers. After inserting the device, configure the Ethernet connection.

1. Swipe down from the Status bar to open the Quick Settings bar and then touch ⚙.
2. Touch **Network & internet**.
3. Touch **Ethernet**.
4. Slide the switch to the **ON** position.
5. Place the device into the Ethernet cradle slot.
6. Touch and hold eth0 until the menu appears.
7. Touch **Modify Proxy**.
8. Touch the **Proxy** drop-down list and select **Manual**.
9. In the **Proxy hostname** field, enter the proxy server address.
10. In the Proxy port field, enter the proxy server port number.

NOTE: When entering proxy addresses in the Bypass proxy for field, do not use spaces or carriage returns between addresses.

11. In the **Bypass proxy for** text box, enter addresses for web sites that do not require to go through the proxy server.
12. Use the separator “|” between addresses.
13. Touch **MODIFY**.
14. Touch the Home button.

Configuring Ethernet Static IP Address

The device includes Ethernet cradle drivers. After inserting the device, configure the Ethernet connection.

1. Swipe down from the Status bar to open the Quick Settings bar and then touch ⚙.
2. Touch Ethernet.
3. Slide the switch to the **ON** position.
4. Place the device into the Ethernet cradle slot.
5. Touch **eth0**.
6. Touch **Disconnect**.
7. Touch **eth0**.
8. Touch the **IP** settings drop-down list and select Static.
9. In the **IP address** field, enter the proxy server address.
10. If required, in the **Gateway** field, enter a gateway address for the device.
11. If required, in the **Netmask** field, enter the network mask address.
12. If required, in the **DNS** address fields, enter a Domain Name System (DNS) addresses.
13. Touch **CONNECT**.
14. Touch the Home button.

5-Slot Charge Only Cradle

CAUTION: Ensure that you follow the guidelines for battery safety described in Battery Safety Guidelines.

The 5-Slot Charge Only Cradle:

- Provides 5 VDC power for operating the device.
- Simultaneously charges up to five devices.

Figure 37 5-Slot Charge Only Cradle

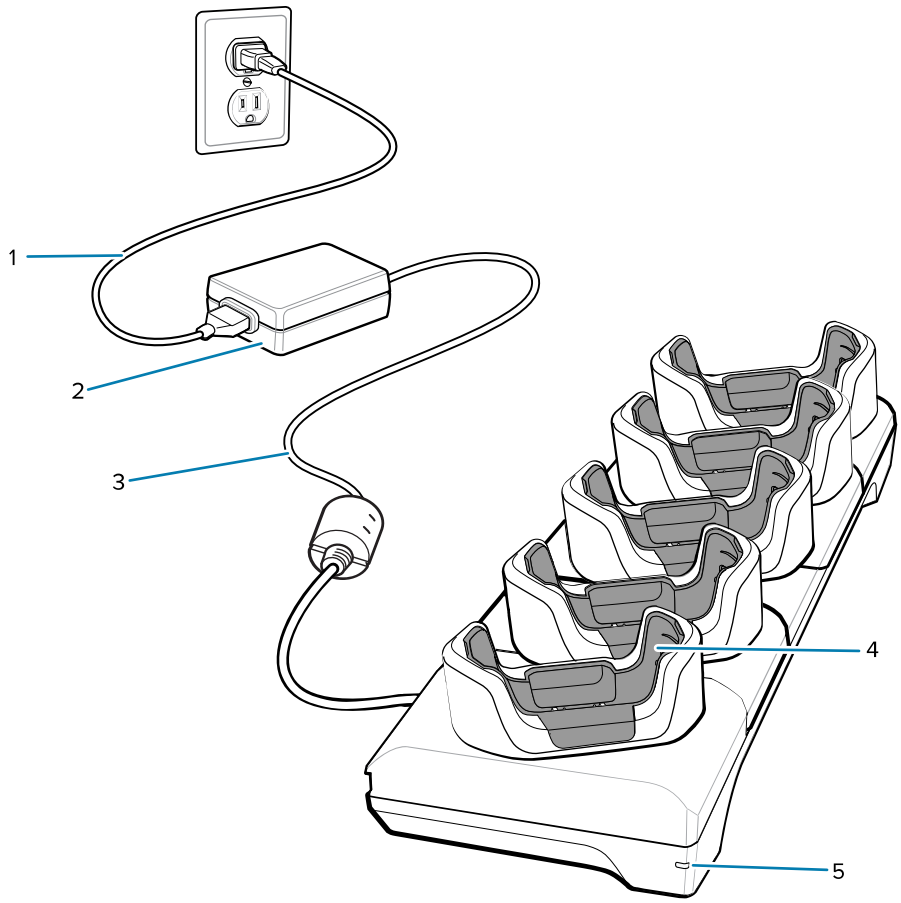

1	AC line cord
2	DC power supply
3	DC line cord
4	Device charging slot with shim
5	Power LED

5-Slot Ethernet Cradle

CAUTION: Ensure that you follow the guidelines for battery safety described in Battery Safety Guidelines.

The 5-Slot Ethernet Cradle:

- Provides 5 VDC power for operating the device.
- Connects the device (up to five) to an Ethernet network.
- Simultaneously charges up to five devices.

Figure 38 5-Slot Ethernet Cradle

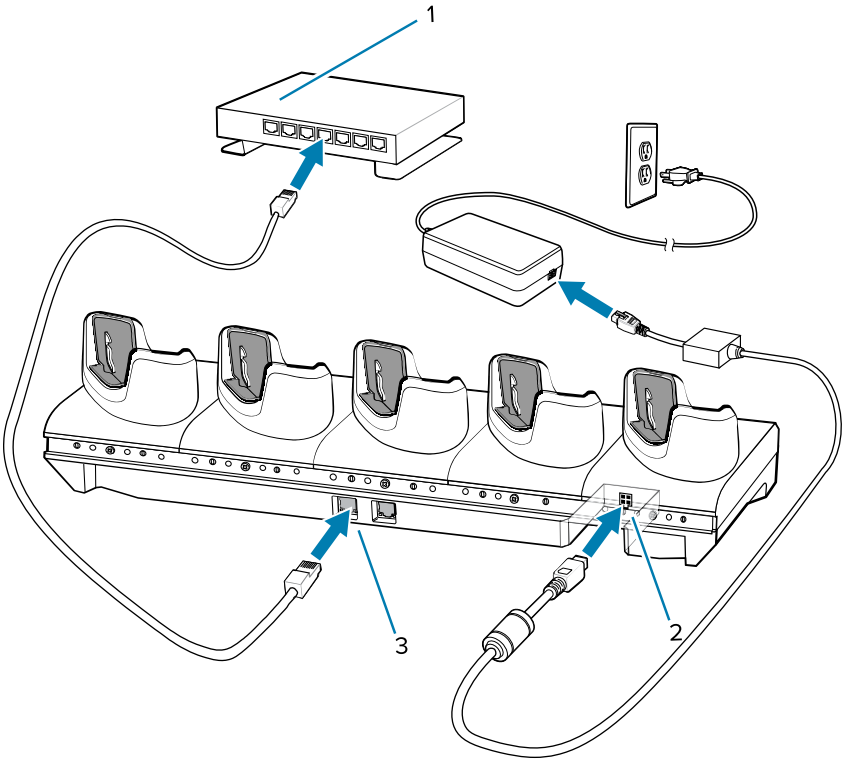

1	Ethernet switch
2	Power supply
3	Ethernet port

NOTE: See Ethernet Settings for detailed information on configuring Ethernet Proxy and Static IP Address settings.

Daisy-chaining Ethernet Cradles

Daisy-chain up to ten 5-Slot Ethernet cradles to connect several cradles to an Ethernet network. Use either a straight or crossover cable. Daisy-chaining should not be attempted when the main Ethernet connection to the first cradle is 10 Mbps as throughput issues will almost certainly result.

To daisy-chain 5-Slot Ethernet cradles:

1. Connect power to each 5-Slot Ethernet cradle.
2. Connect an Ethernet cable to one of the ports on the switch and the other end to the to Primary Port of the first cradle.
3. Connect an Ethernet cable to the Secondary port of the first cradle.
4. Connect the other end of the Ethernet cable to the Primary port of the next 5-Slot Ethernet cradle.

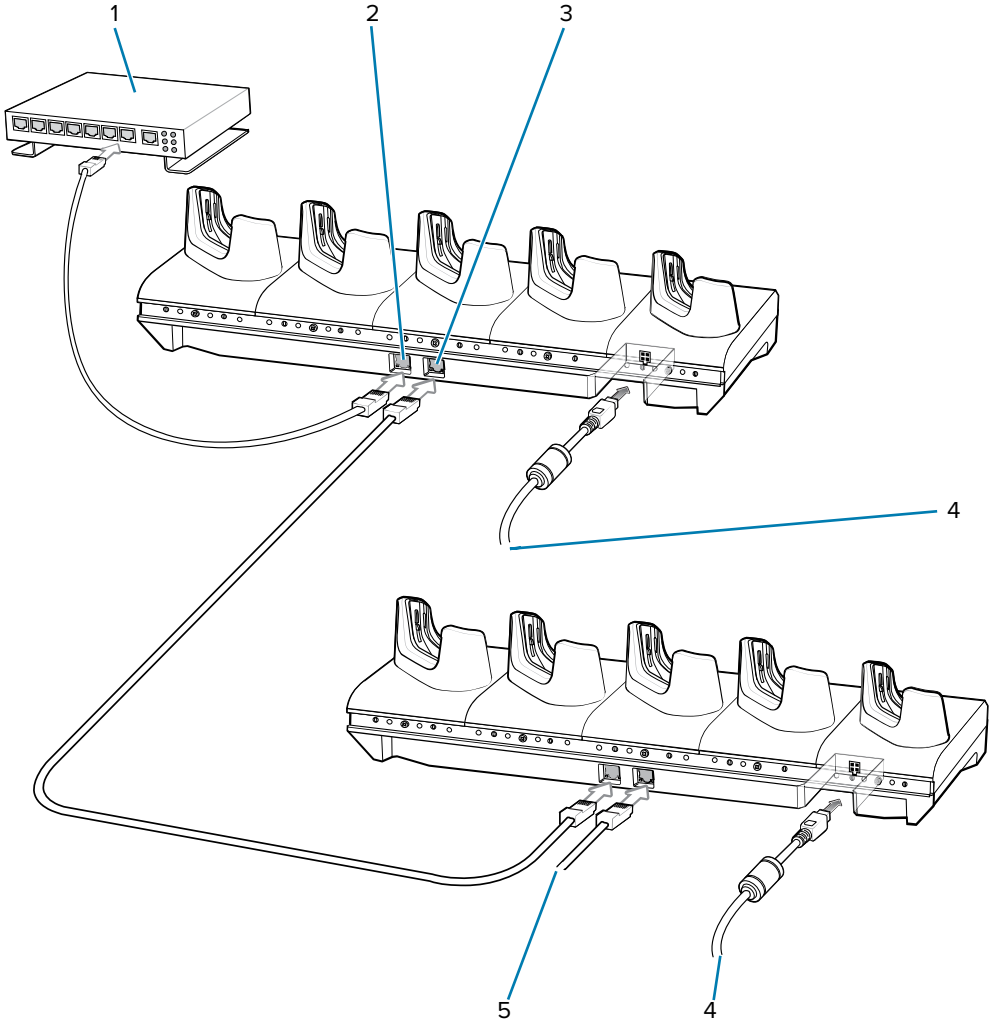

1	Ethernet switch
2	Primary port
3	Secondary port

4	To power supply
5	To next cradle

5. Connect additional cradles as described in step 3 and 4.

Establishing Ethernet Connection

1. Swipe down with two fingers from the status bar to open the quick access panel and then touch ⚙.
2. Touch Ethernet.
3. Slide the Ethernet switch to the **ON** position.
4. Insert the device into a slot. The icon appears in the Status bar.
5. Touch **Eth0** to view Ethernet connection details.

LED Indicators

There are two green LEDs on the side of the cradle. These green LEDs light and blink to indicate the data transfer rate.

Table 26 LED Data Rate Indicators

Data Rate	1000 LED	100/10 LED
1 Gbps	On/Blink	Off
100 Mbps	Off	On/Blink
10 Mbps	Off	On/Blink

5-Slot (4 Device/4 Spare Battery) Charge Only Cradle with Battery Charger

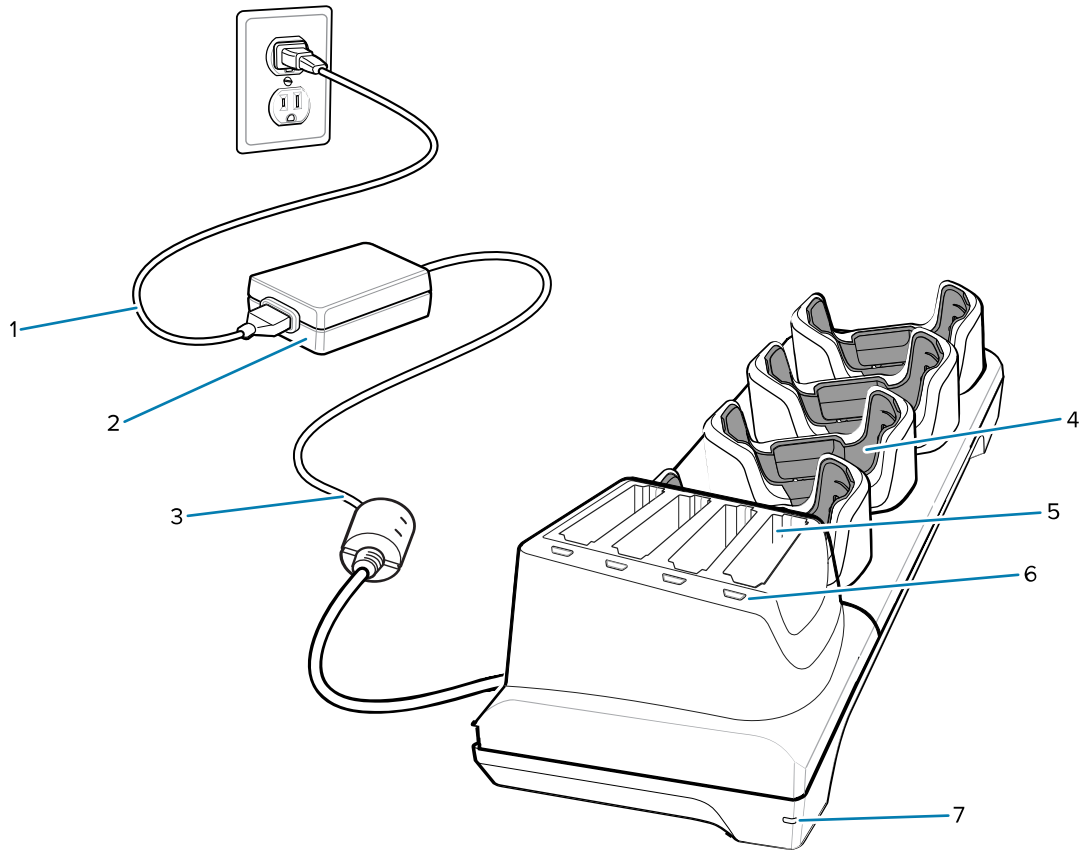

1	AC line cord
2	DC power supply
3	DC line cord
4	Device charging slot with shim
5	Spare battery charging slot
6	Spare battery charging LED
7	Power LED

Charging Spare Batteries

1. Connect the charger to a power source.

2. Insert the battery into a battery charging well and gently press down on the battery to ensure proper contact.

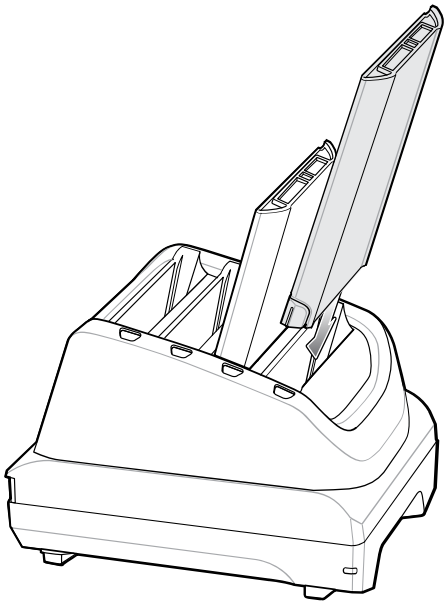

Each Battery Charging LED indicates the status of the battery charging in each slot. See Spare Battery Charging for spare battery charging indicator descriptions.

4-Slot Battery Charger

The 4-Slot Battery Charger allows up to four batteries to be charged simultaneously.

CAUTION: Ensure that you follow the guidelines for battery safety described in .

Figure 39 4-Slot Battery Charger

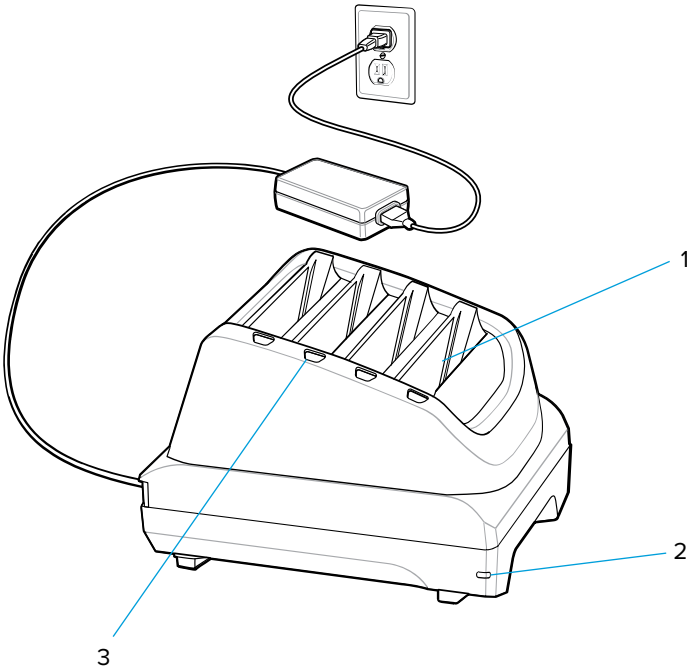

1	Battery slot
2	Power LED
3	Battery charge LED

Single Charger Setup

1. Plug the power supply plug into the power port on the back of the charger.
2. Plug the AC line cord into the power supply.

3. Plug the AC line cord into an AC outlet.

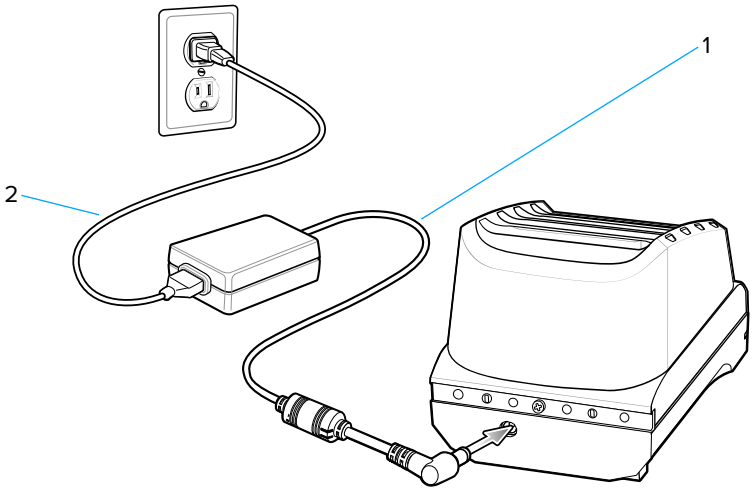

1	Power supply
2	AC line cord

Two Charger Setup

1. Plug the 2-way DC Cable plugs into the power port on the back of each charger.
2. Plug the 2-way DC Cable connector into the power output of the power supply (PWR-BGA12V108W0WW).
3. Plug the AC line cord into the power supply.

4. Plug the AC line cord into an AC outlet.

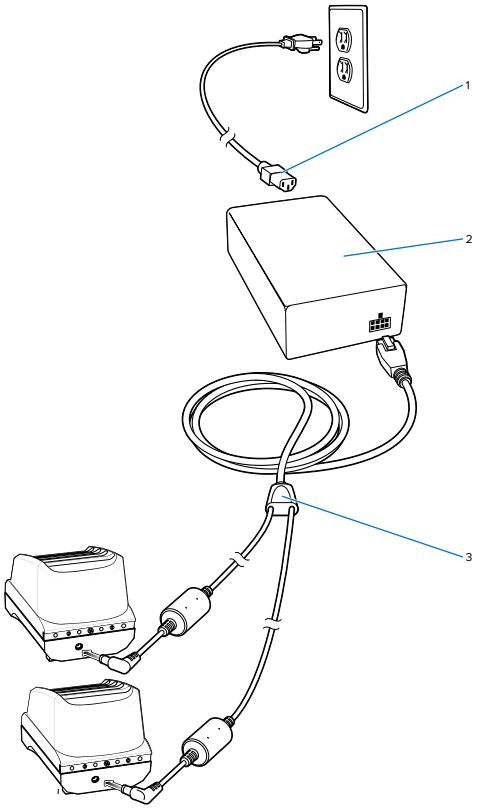

1	AC line cord
2	Power supply
3	2-way DC cable

Charging Spare Batteries

1. Connect the charger to a power source.

2. Insert the battery into a battery charging well and gently press down on the battery to ensure proper contact.

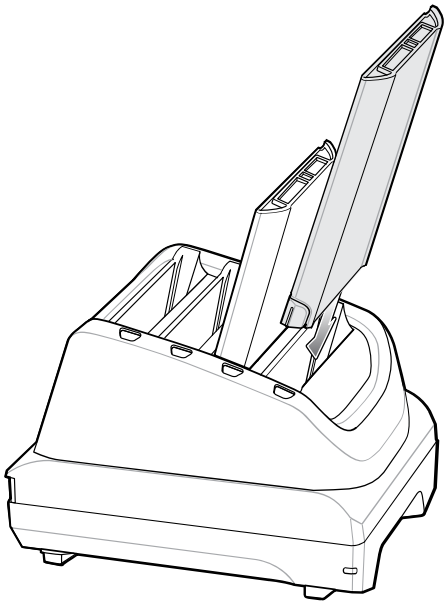

Each Battery Charging LED indicates the status of the battery charging in each slot. See Spare Battery Charging for spare battery charging indicator descriptions.

Rugged Boot

The Rugged Boot provides additional protection for the device.

Installation

To install the Rugged Boot

1. Insert the top of the device into the boot.

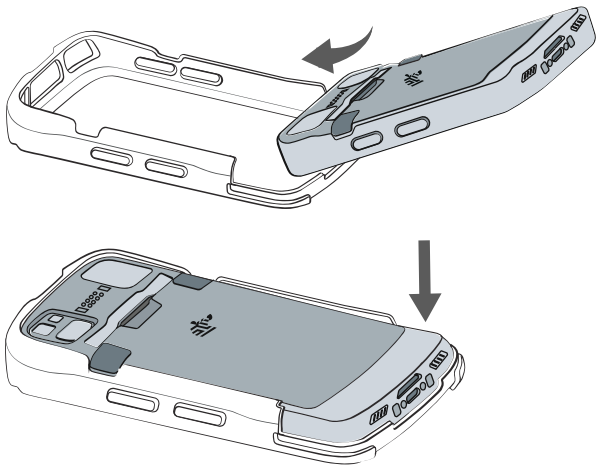

2. Insert the bottom of the boot.

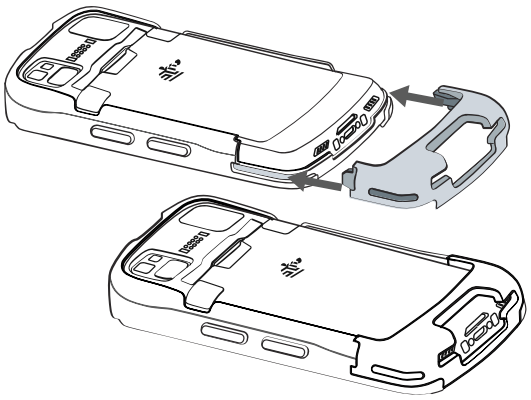

Removal

To remove the device from the Rugged Boot:

1. Place thumbs in the center of the boot side panels and pull up both sides of the boot.

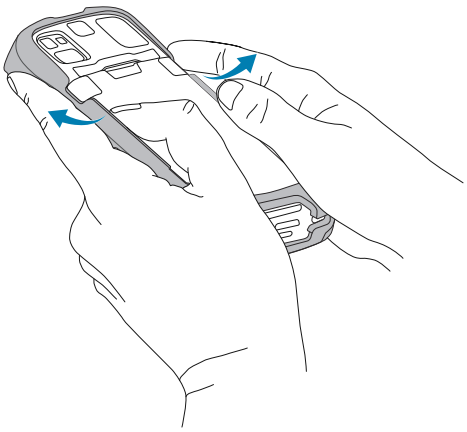

NOTE: Ensure that the side panels are pulled up when removing the device from the boot. Do not use the four indentations (1) located at the top and bottom of the side panels to remove the device from the boot.

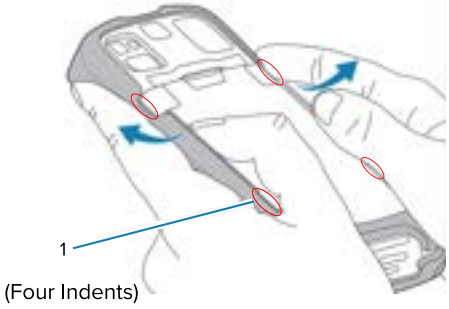

2. Remove the bottom of the boot.

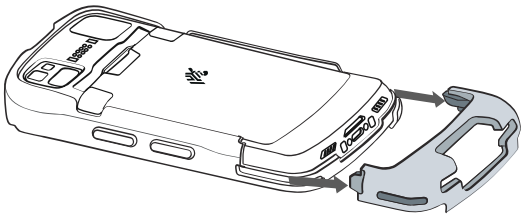

3. Lift the device from the boot.

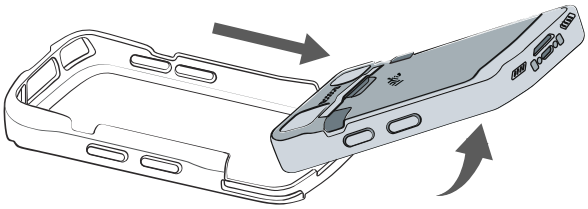

Installing Stylus

To install the optional stylus:

1. Insert one of the loop ends of the tether through the hole in the stylus.

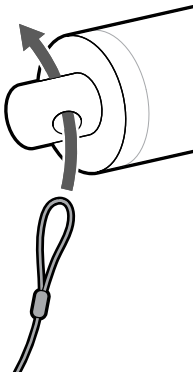

2. Feed the tether through the loop.

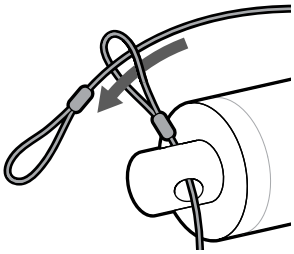

3. Pull the tether until the loop tightens.

4. Insert the tether loop under the device hand strap bar.

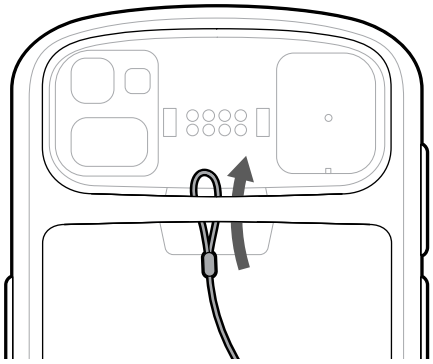

5. Feed the stylus through the loop.

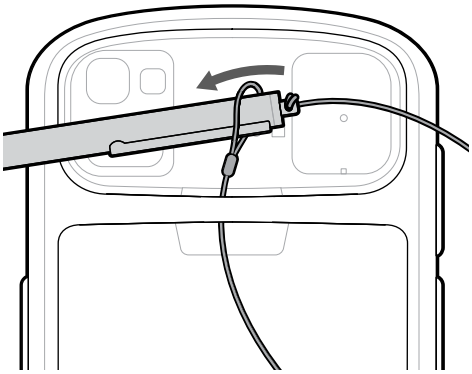

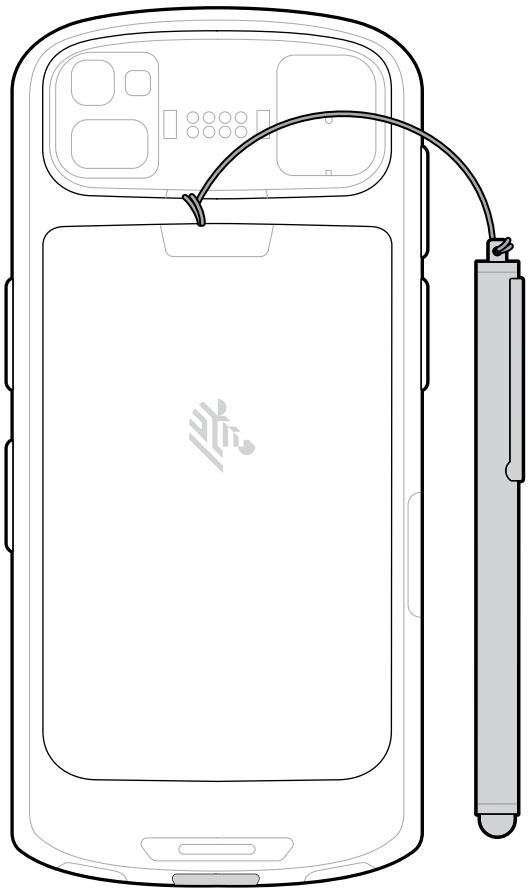

Installing Stylus with Hand Strap

1. Insert one of the loop ends of the tether through the hole in the stylus.

2. Feed the tether through the loop.

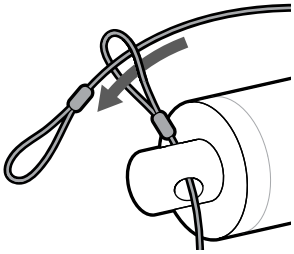

3. Pull the tether until the loop tightens.
4. Insert the loop into the top hand strap clip.

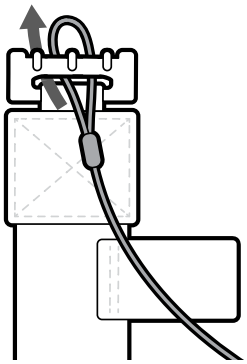

5. Feed the stylus attached to the tether through the tether loop and tighten.

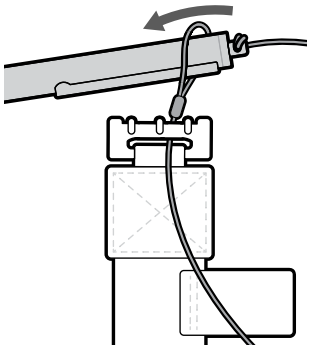

6. Attach the hand strap to the device. See Basic Hand Strap on page 173.
7. Insert the stylus into the stylus holder on the hand strap when not in use.

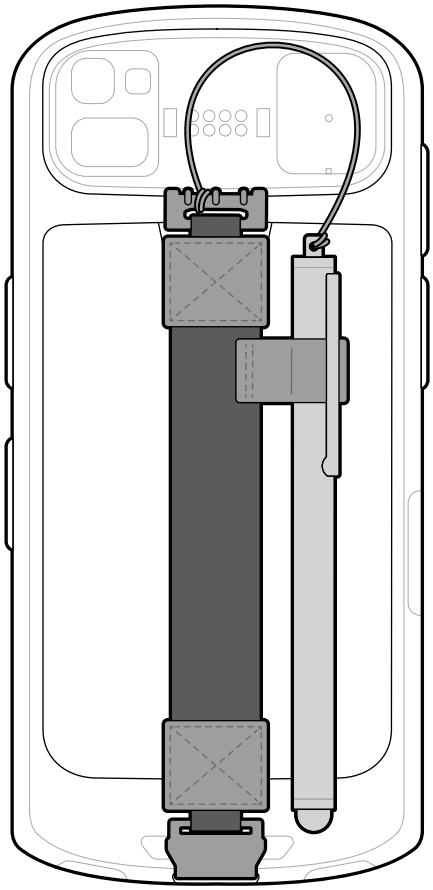

Basic Hand Strap

Use the Basic Hand Strap to add a hand strap to the device.

Installation

To install the Basic Hand Strap:

1. Clip the top of the hand strap onto the device top hand strap bar.

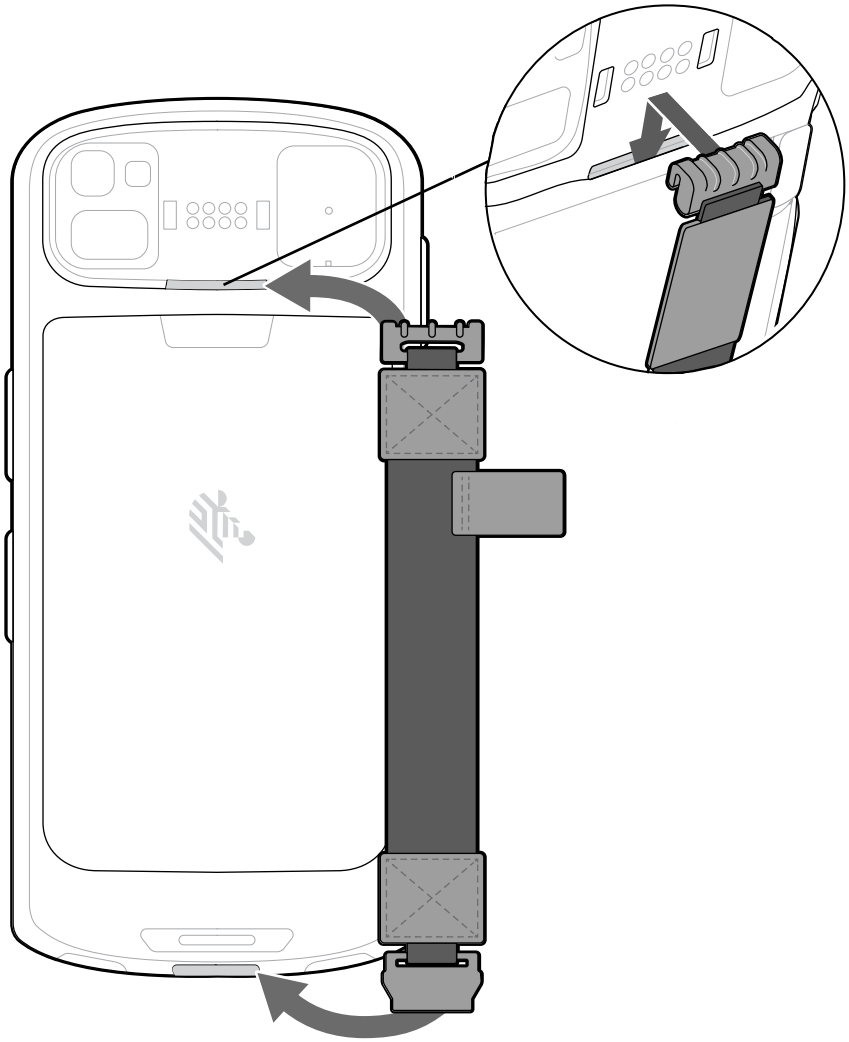

2. Insert the bottom of the hand strap onto the device bottom bar.

NOTE: The optional stylus must be installed on the hand strap before the hand strap is installed on the device.

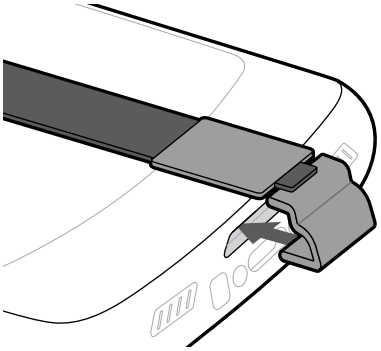

Removal

To remove the Basic Hand Strap:

1. Place your thumb on the top of the hand strap (below the top clip) and index finger underneath the top of the hand strap, pull the top clip up and off of the hand strap bar.

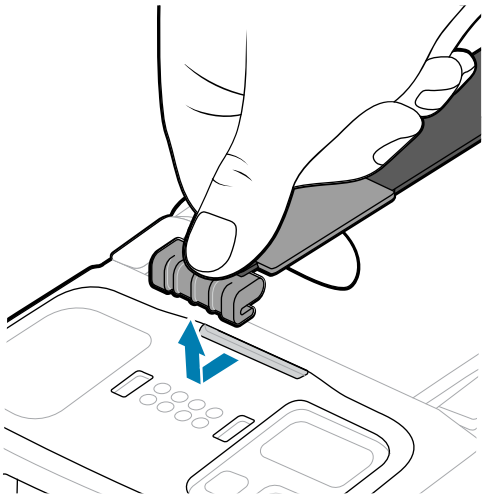

2. Remove the bottom clip by placing both thumbs on the clip and pushing down to unclip.

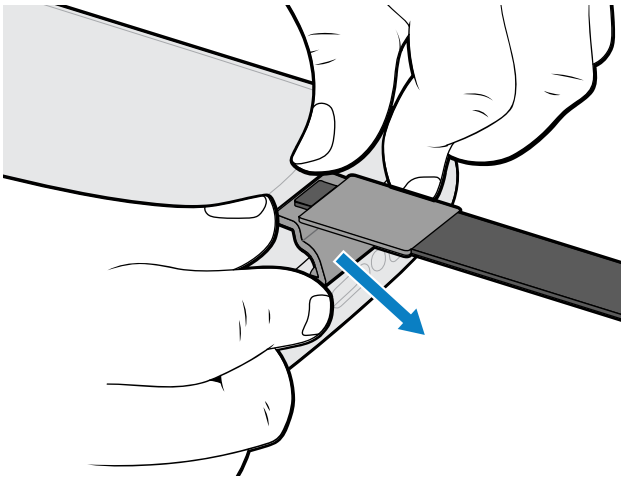

3.5 mm Audio Adapter

The 3.5 mm Audio Adapter plugs into the device and connects to a wired headset with a 3.5 mm plug.

NOTE: The Audio Adapter is available for the TC53 device standard configuration.

To attach a 3.5 mm headset:

1. Open the headset jack cover.
2. Insert the 3.5 mm Audio Adapter plug into the headset jack.

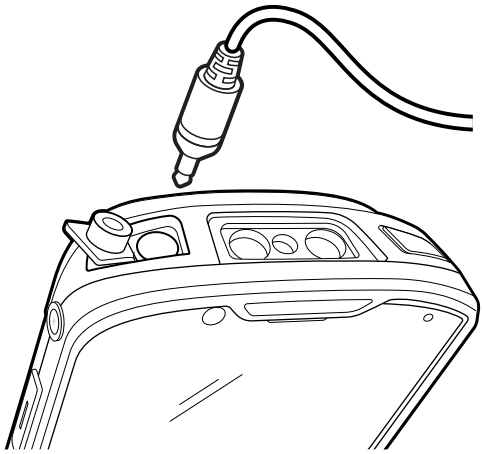

3. Connect the 3.5 mm connector plug of the headset into the 3.5 mm Audio Adapter.

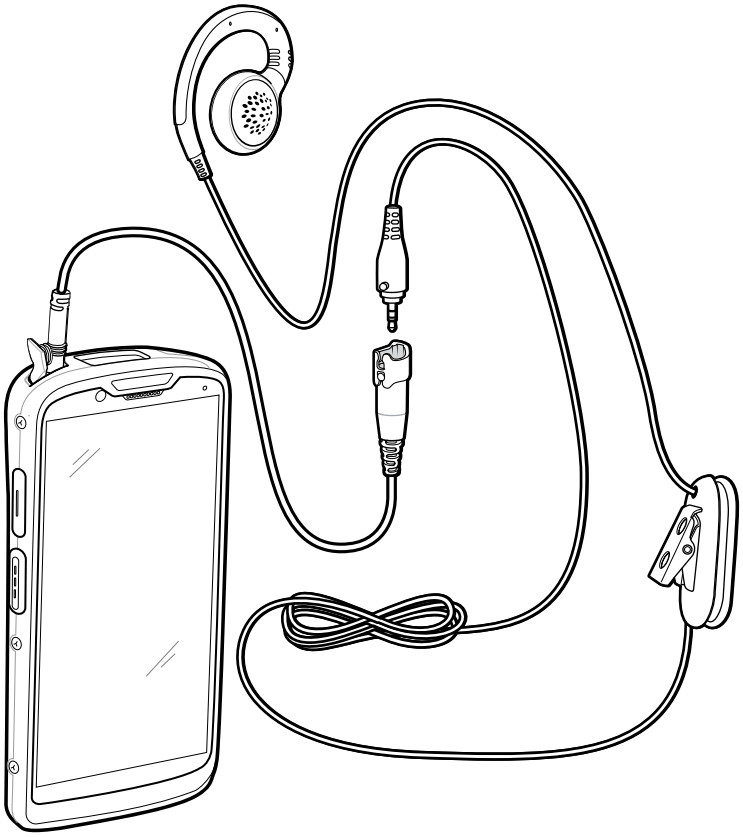

NOTE: After removing headset, headset jack cover must be replaced and securely seated to ensure proper device sealing.

USB Headset

To attach the USB-C headset, insert the USB-C headset into the headset USB-C port.

Figure 40 USB Headset Attachment

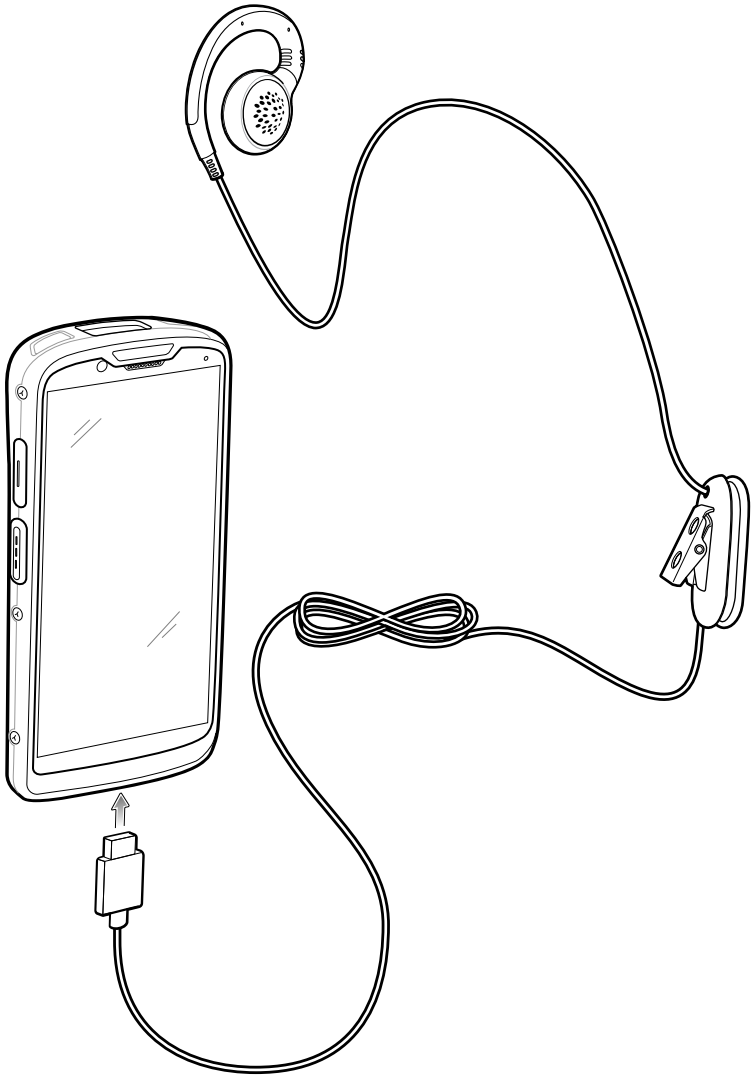

Charge/USB-C Cable

The USB-C Cable snaps onto the bottom of the device and removes easily when not in use. When attached to the device, it provides charging and allows the device to transfer data to a host computer.

Connecting Charge/USB-C Cable to Device

1. Remove the USB-C cover.

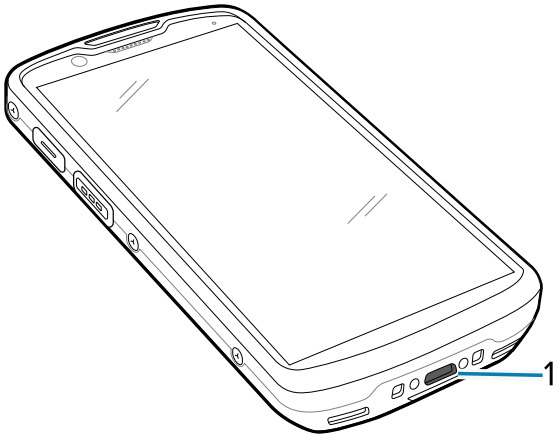

1	USB-C cover/port

2. Insert the USB-C cable into the USB-C port on the device.

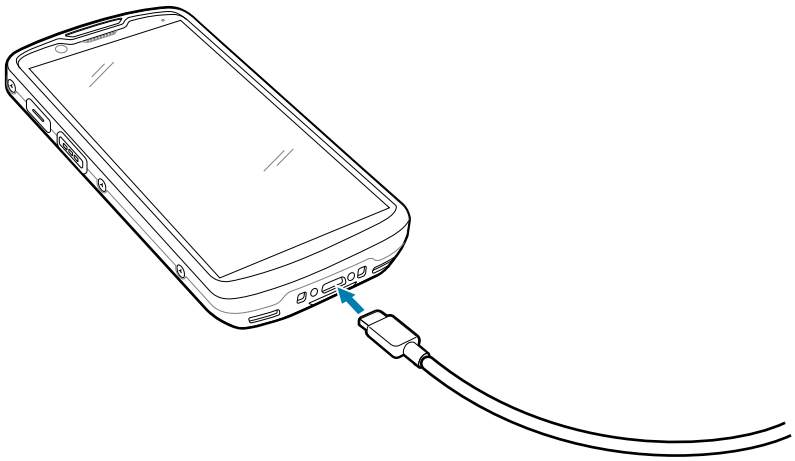

NOTE: Replace the USB-C cover when the USB-C port is not in use.

USB Communication

To connect the device to a host computer:

1. Connect the Charge/USB-C Cable to the device.
2. Connect the USB connector of the cable to a host computer.

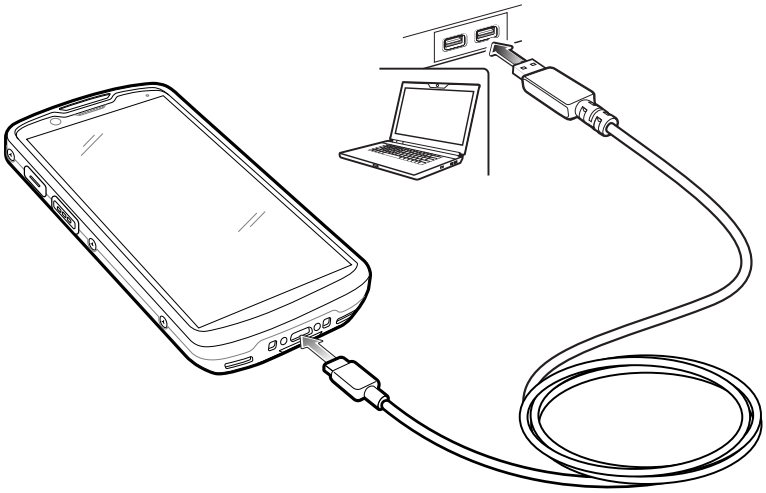

Charging the Device

To charge the device using the Charge/USB Cable:

1. Connect the Charge/USB Cable to the device.
2. Connect the USB connector to the power supply.

NOTE: See Power Supply for information on setting up the power supply. By default, the device includes an interface connector. If the interface connector is removed for USB-C cable connectivity, then it must be replaced before charging or receiving an Ethernet IP address if placed in a cradle.

3. Plug the power supply into a power outlet.

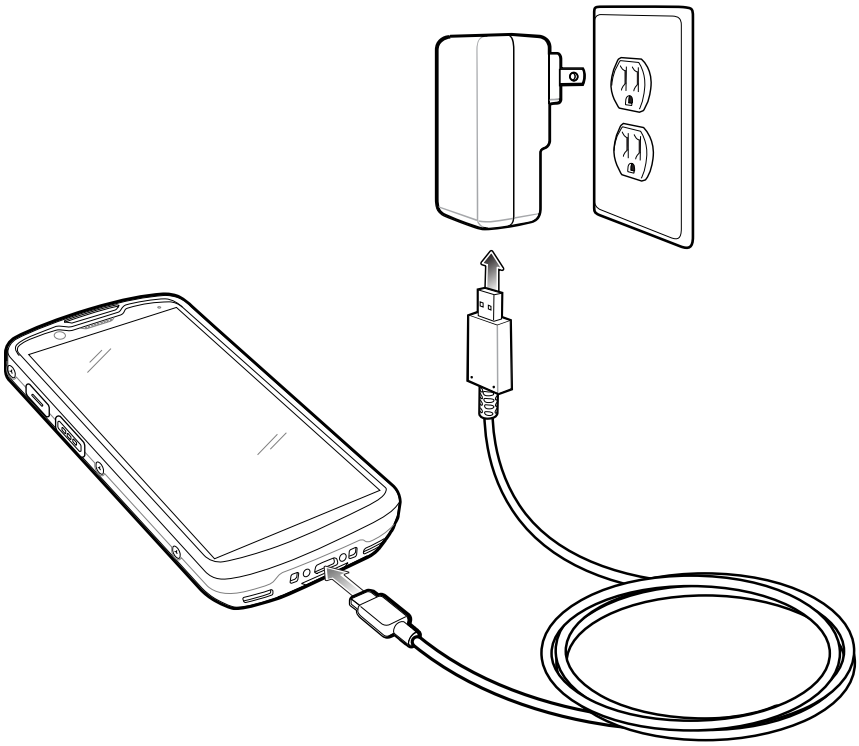

Trigger Handle

The Trigger Handle adds a gun-style handle with a scanning trigger to the device. It increases comfort when using the device in scan-intensive applications for extended periods of time.

NOTE: The Rugged Boot is required to install the Trigger Handle onto the device. Trigger Handle (p/n TRG-NGTC5-ELEC-01) does not contain the Rugged Boot and must be purchased separately.

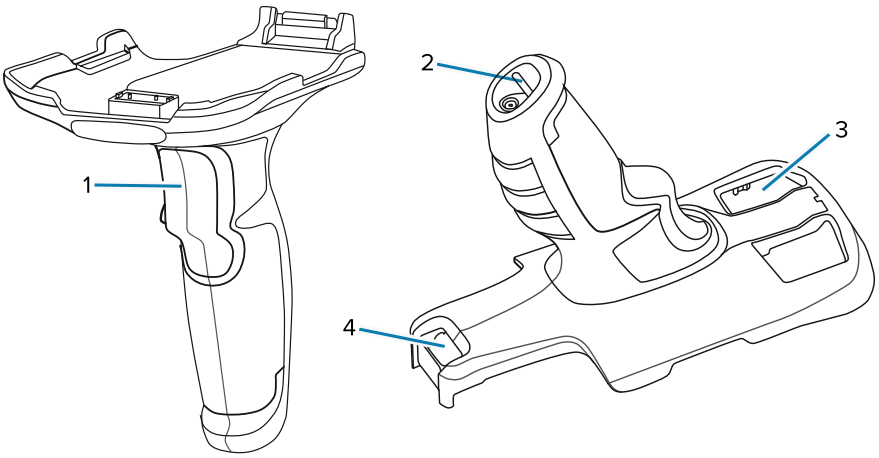

1	Trigger
2	Lanyard mount
3	Camera window

4	Release latch

Inserting the Device into the Trigger Handle

NOTE: Install the boot prior to trigger installation. See Rugged Boot Installation. If a hand strap or stylus is installed, remove them prior to installing the rugged boot and trigger handle.

To install the device onto the Trigger handle:

1. Align and insert the device with the rugged boot into the top of the trigger.

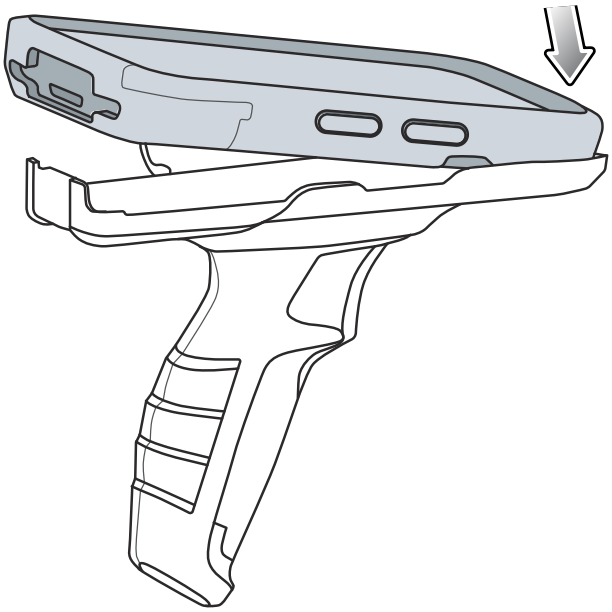

2. Rotate the device down and press down until it snaps into place.

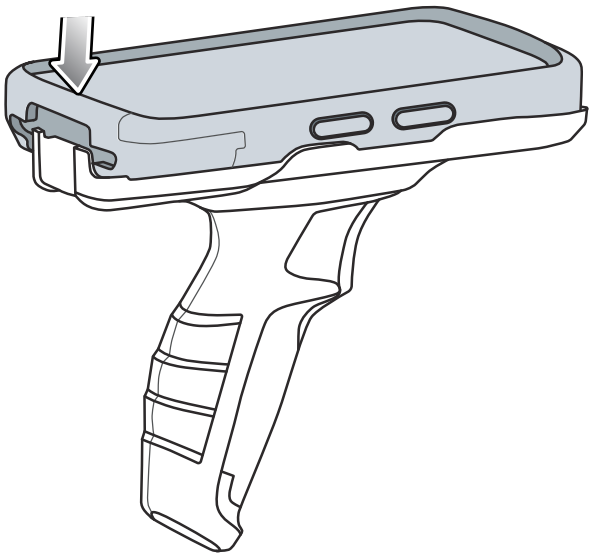

Removing the Device from the Trigger Handle

To remove the device from the Trigger Handle:

1. Place one hand around the Trigger Handle while holding the device with the other hand.
2. Press the Trigger Handle release latch.

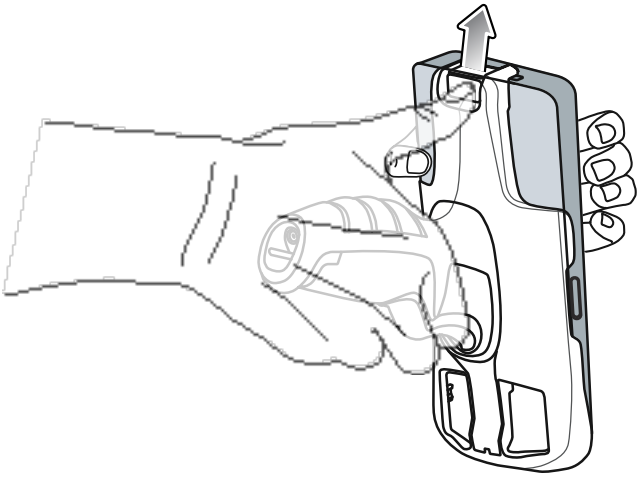

3. Slide the device down and out of the Trigger Handle.

Installing the Optional Lanyard

To install the lanyard onto the Trigger Handle:

1. Insert the loop end of the tether into the slot on the bottom of the handle.

2. Feed the lanyard through the loop.

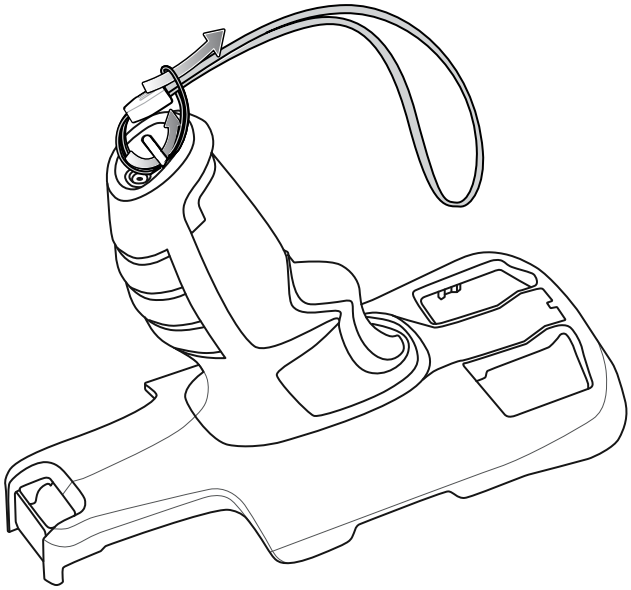

3. Pull the lanyard until the loop tightens.

Power Supply

Use the power supply with the Rugged Charge/USB Cable to charge the device. The power supply comes in various configurations with different plug adapters for use internationally. To change the plug adapters:

1. Pull the release button down.

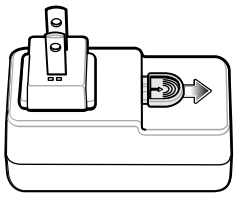

2. Rotate the plug adapter up and out of the power supply.

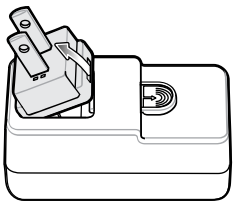

3. Insert the replacement plug adapter into the power supply.

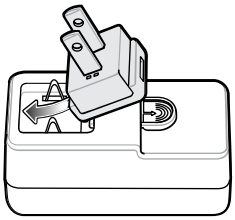

4. Rotate the plug adapter down, and snap it into place.

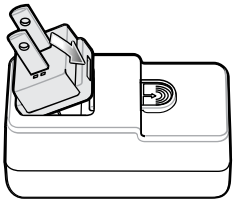

5-Slot Cradle Rack Installation

Use the Rack/Wall Mount Bracket to mount a 5-slot cradle on a rack. When installing on a rack, first assemble the bracket and cradles/chargers and then install the assembly on the rack.

1. Place the power supply in bottom tray.
2. Connect AC line cord to power supply.
3. Connect DC line cord to power supply.
4. Secure power supply and cables to bottom tray with tie wraps.

NOTE: Ensure tie wrap buckle is on side of power supply. Tie wrap buckle on top of power supply interferes with top tray.

5. Route cables through cable slots.

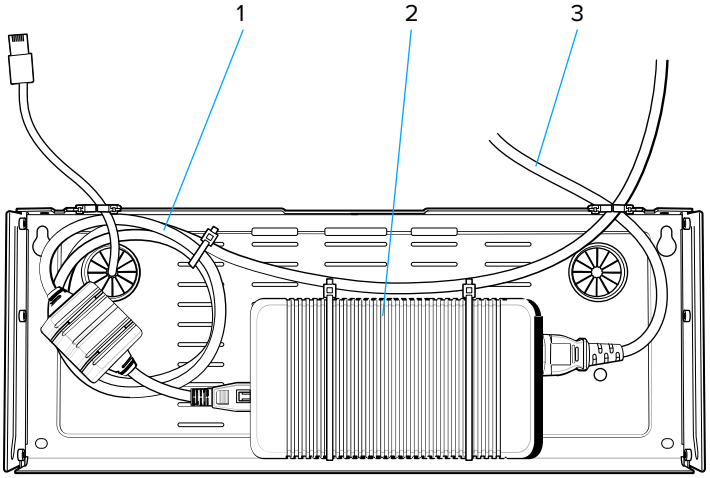

1	DC line cord
2	Power supply

3	AC line cord

6. Secure four M2.5 studs to top tray as shown.

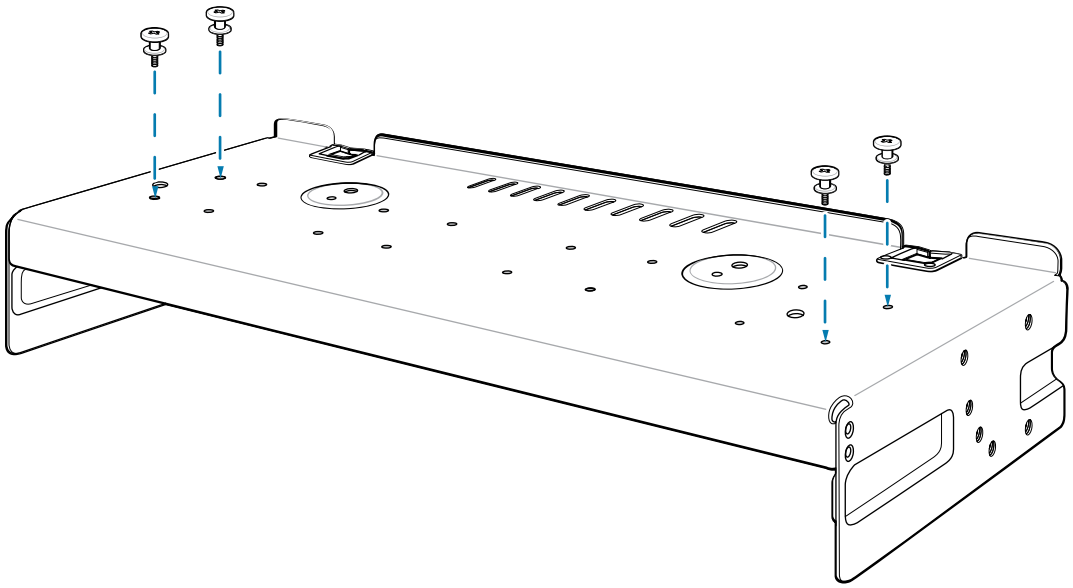

7. Align and install 5-Slot cradle onto studs of top tray.

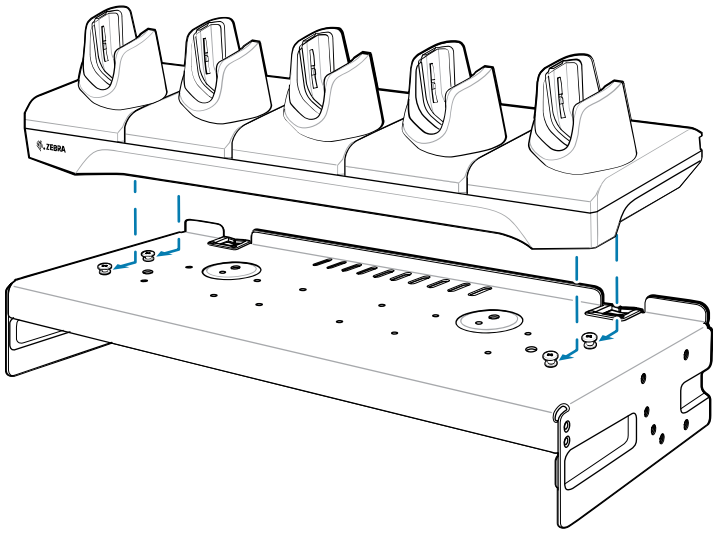

8. Secure cradle to top tray with two M2.5 safety screws.

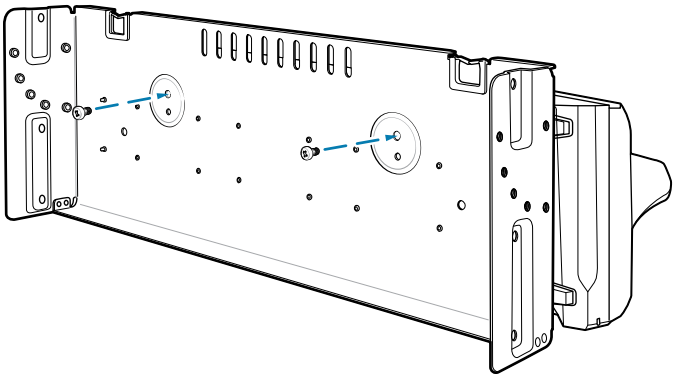

9. Slide top tray onto bottom tray.

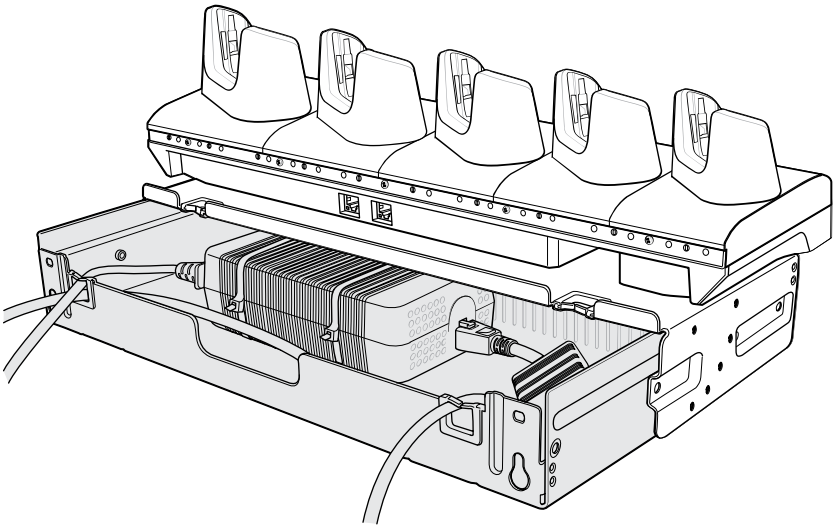

10. Connect cables to cradle.

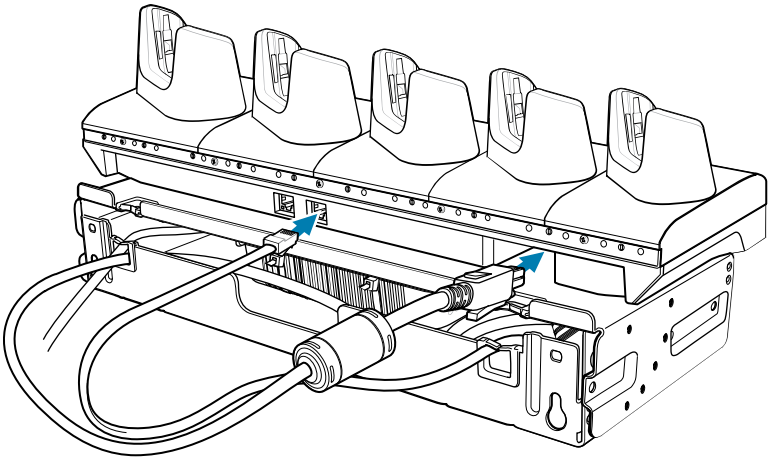

11. Secure top tray to bottom tray with 4 M5 screws (two on each side).

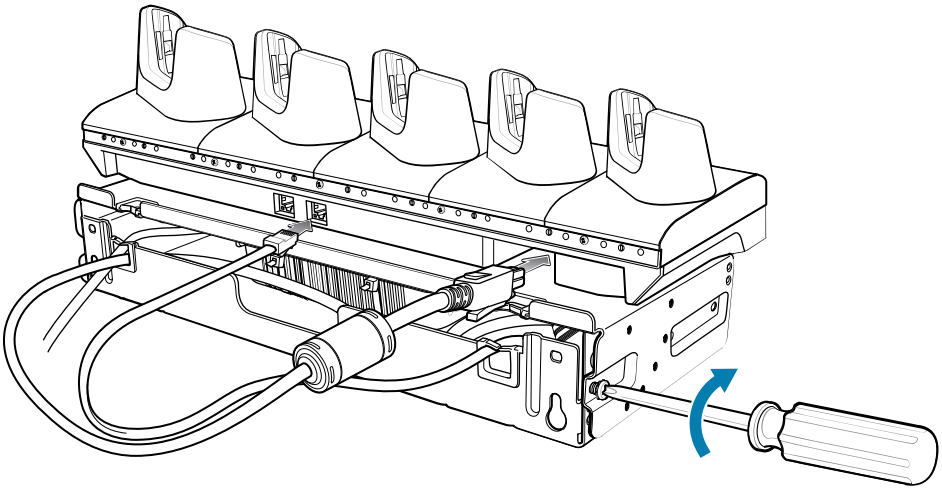

See Rack Mount Installation for installing the bracket assembly onto a rack.

Four 4-Slot Battery Charger Bracket Installation

Use the Rack/Wall Mount Bracket to mount four 4-Slot Battery Chargers on a rack. When installing on a rack, first assemble the bracket and chargers and then install the assembly on the rack.

1. Place one power supply horizontally in the bottom tray.
2. Place another power supply vertically in the bottom tray.
3. Connect AC line cords to the power supplies.
4. Connect DC line cords to the power supplies.
5. Secure the power supplies and cables to the bottom tray with tie wraps.

6. Route the cables through the cable slots.

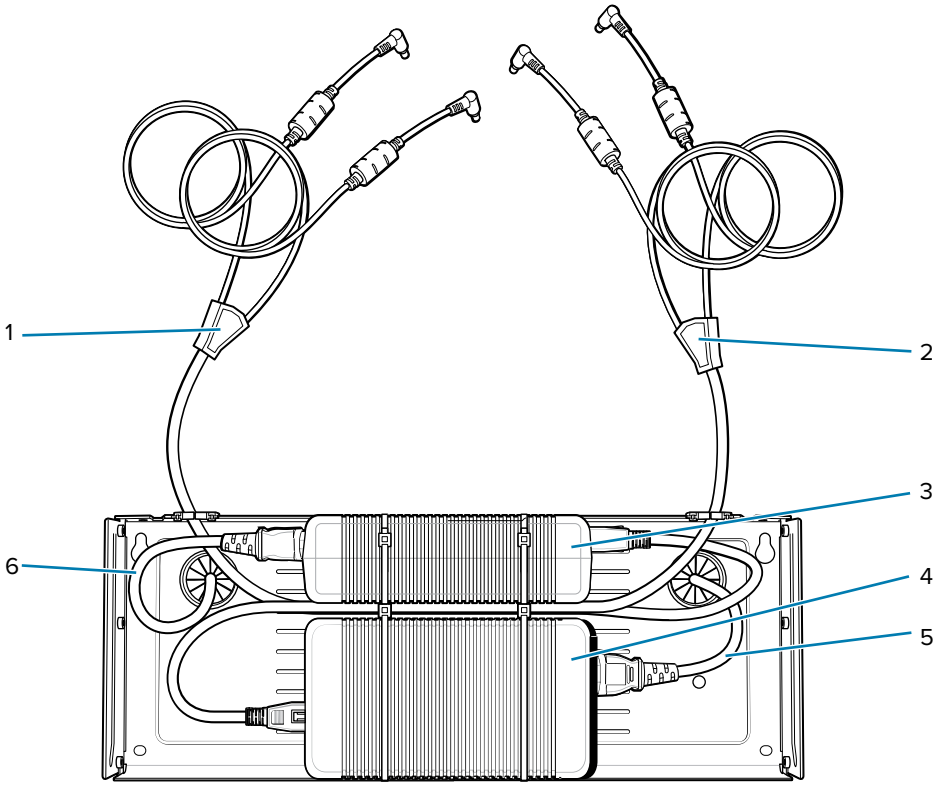

1	DC Y cable 1
2	DC Y cable 2
3	Power supply 1
4	Power supply 2
5	AC line cord 2
6	AC line cord 1

7. Slide the top tray onto the bottom tray until the top tray touches the vertical power supply.

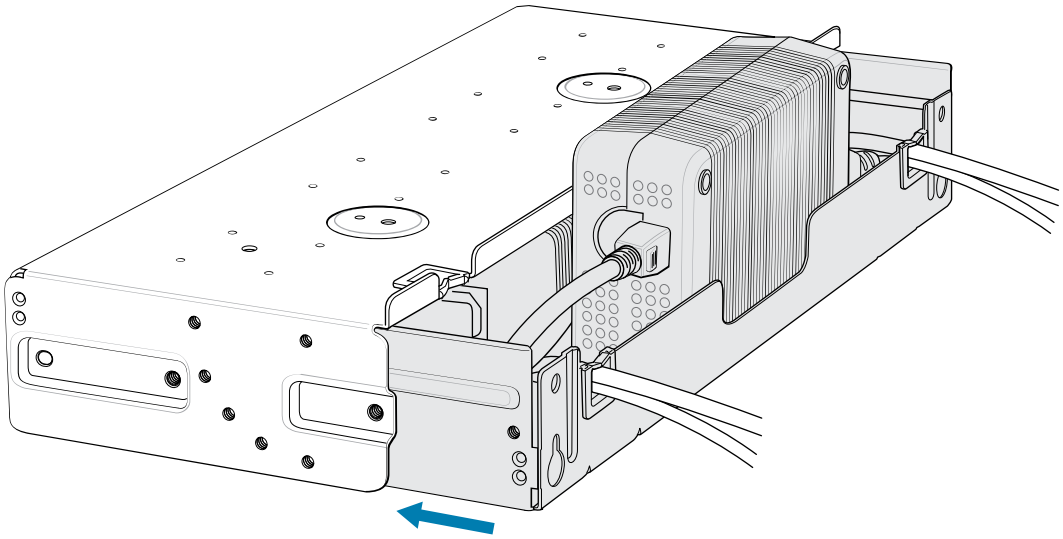

8. Install 16 M2.5 studs onto the top tray as shown.

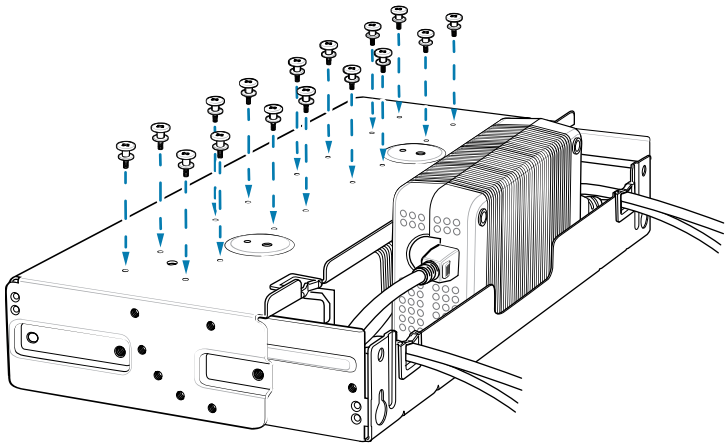

9. Align and install a 4-Slot Battery Charger onto each set of four studs.

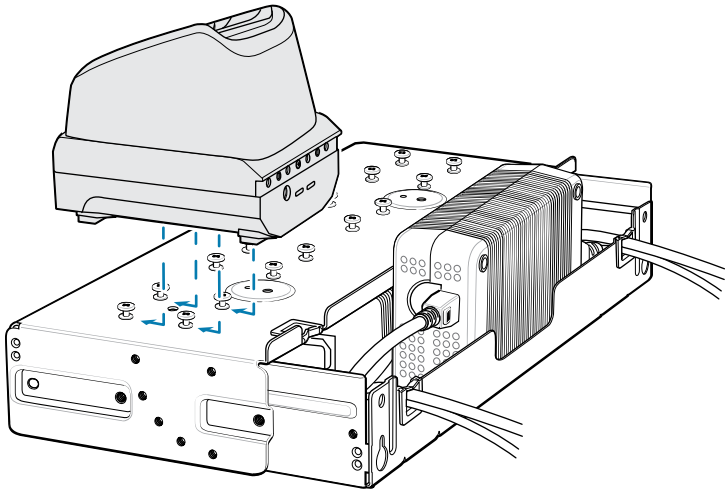

10. Connect DC Y cables to the four 4-Slot Battery Chargers.

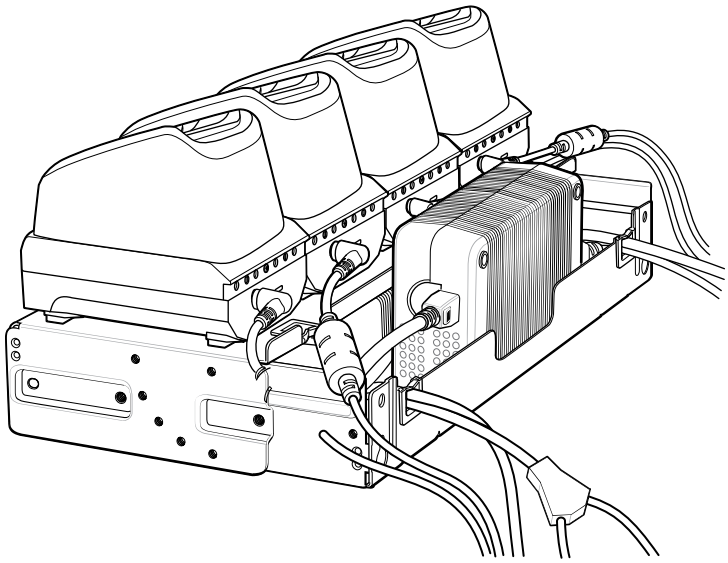

11. Secure the top tray to the bottom tray with four M5 screws (two on each side).

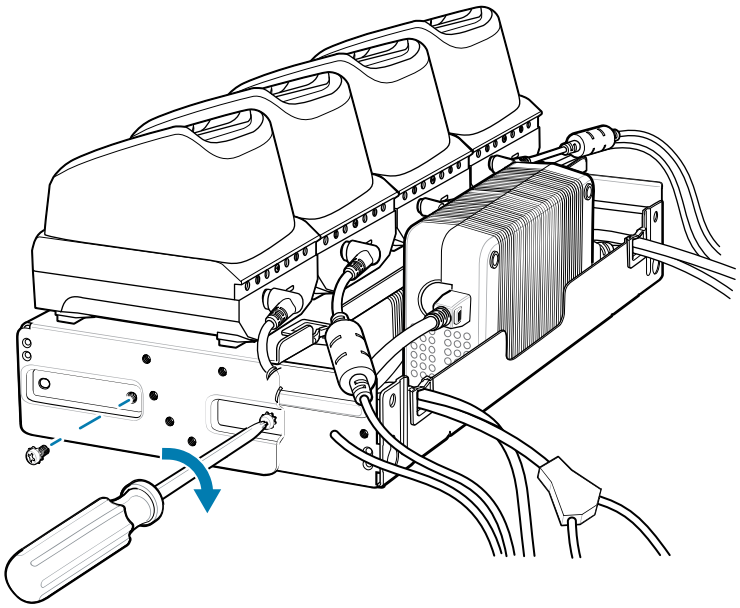

Go to Rack Mount Installation on page 190 for installing the bracket onto a rack.

Rack Mount Installation

NOTE: Use screws provided with rack system. Refer to rack user documentation for instructions.

CAUTION: Installer should ensure that all building codes are followed when connecting the power supplies to an AC power source.

While installing the brackets, power supplies and cables:

- Use tie wraps to secure cables to the bracket and rails.
- Coil cables wherever possible.
- Route power cables along the rails.
- Route inter-cradle cables to the side rails and then from the rails to the bracket.

1. Secure mounting brackets to both sides of top tray with four M5 screws (two on each side). For 5-Slot cradles, position the flange for horizontal installation. For 4-Slot Battery Chargers, position the flange for 25° installation.

Figure 41 Flange Horizontal Position (5-Slot Cradles)

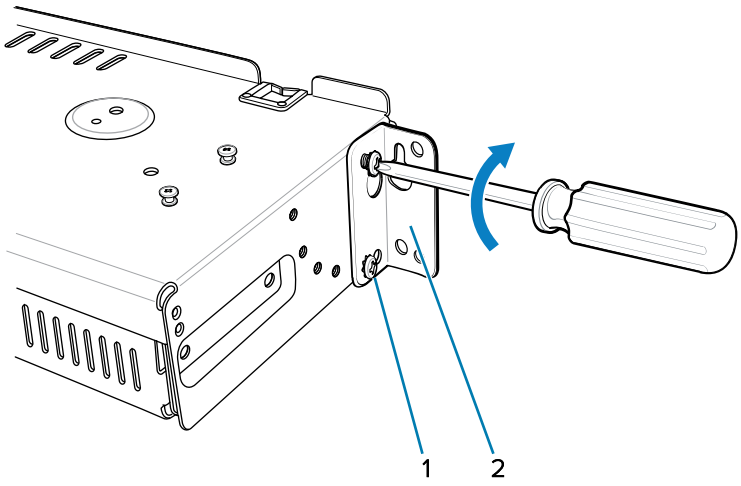

1	Fifth screw hole
2	Flange

Figure 42 Flange 25° Position (4-Slot Battery Chargers)

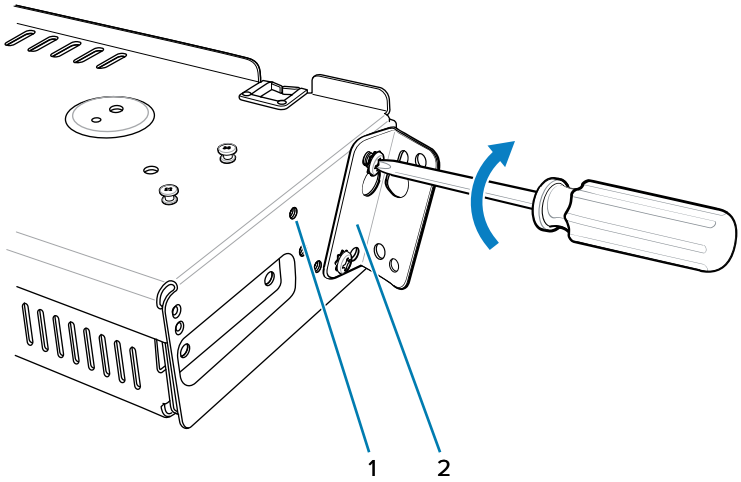

1	Top screw hole

2	Flange

CAUTION: Install mounting bracket with 5-Slot cradle at a maximum height of four feet from ground. Install mounting bracket with 4-Slot Battery Charger at a maximum height of three feet from ground.

NOTE: Distance between two horizontal mounted brackets should be at least 14” apart (from top of one flange to the top of the next flange). Distance between a horizontal mounted bracket and a 25° mounted bracket should be at least 16.25” apart (from top of one flange to the top of the next flange). There should be enough clearance (2.75”) between the top of the device and the bottom of the mounting bracket above.

2. Install two rack system screws for top of mounting brackets. The screw heads should protrude half way from the rail.

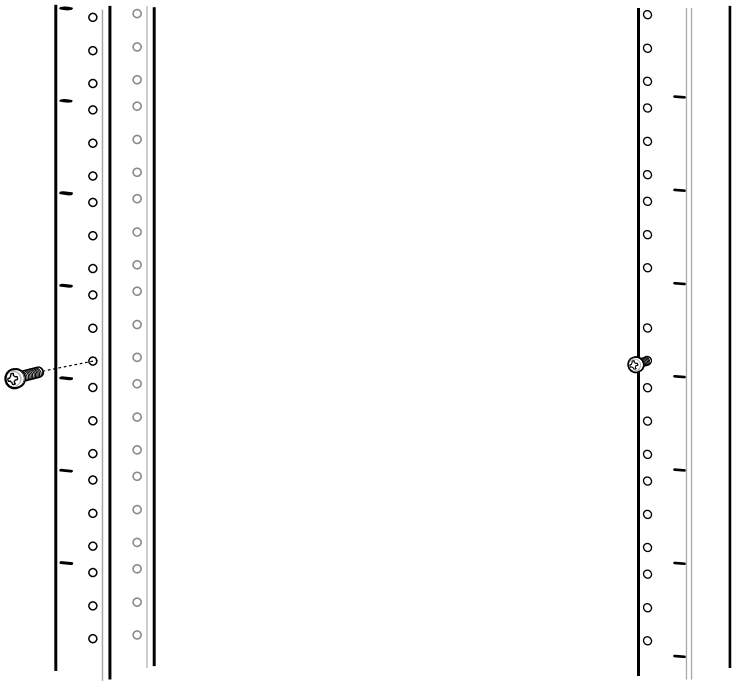

3. Align the mounting bracket’s top mounting key holes with the screws.

4. Place the brackets on the screws.

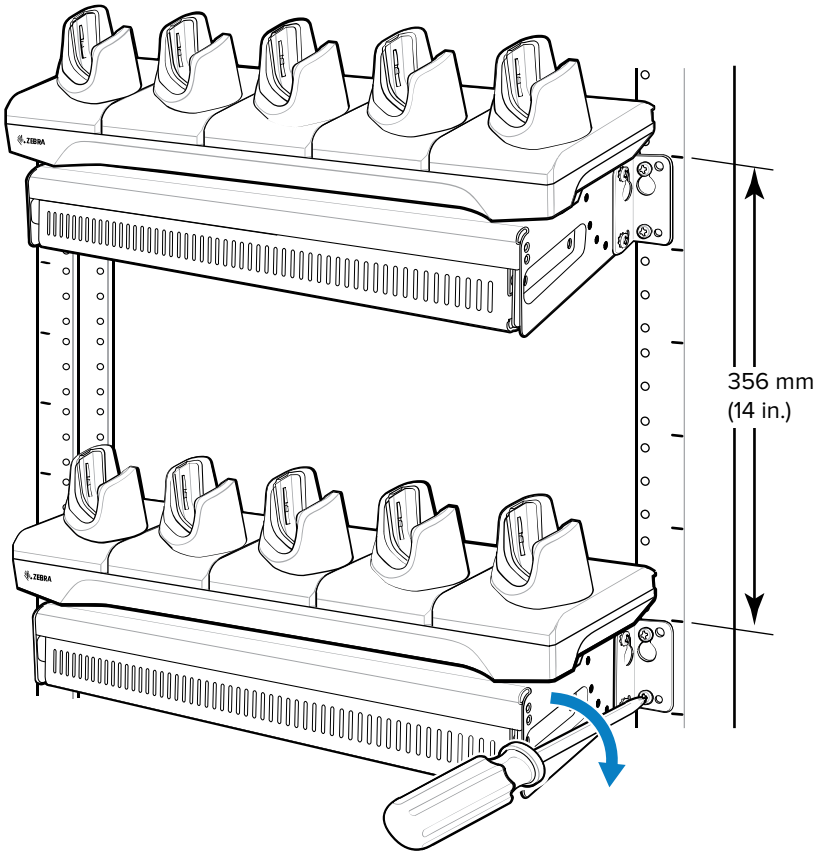

5. Secure the top screws.
6. Install bottom screws and tighten screws.
7. Route cables and connect to power source.

Wall Installation

Use the Rack/Wall Mount Bracket to mount four 4-Slot Battery Chargers or a cradle on a wall. When installing on a wall, first assemble the bottom tray, install the bottom tray on the wall and then assemble the top tray. Use mounting hardware (screws and/or anchors) appropriate for the type of wall mounting the bracket onto. The Mount Bracket mounting slots dimensions are 5 mm (0.2 in.). Fasteners must be able to hold a minimum of 20 Kg (44 lbs.) For proper installation consult a professional installer. Failure to install the bracket properly can possibly result in damage to the hardware.

CAUTION: Install mounting bracket with 5-Slot cradle at a maximum height of four feet from ground. Install mounting bracket with 4-Slot Battery Charger at a maximum height of three feet from ground.

Bottom Tray Assembly

See steps 1 through 5 of 4-Slot Battery Chargers Rack Installation for instructions.

Mounting the Bracket

CAUTION: Installer should ensure that all building codes are followed when connecting the power supplies to an AC power source.

While installing the brackets, power supplies and cables:

- Use tie wraps to secure cables to the bracket and rails.
- Coil cables wherever possible.
- Route power cables along the rails.
- Route inter-cradle cables to the side rails and then from the rails to the bracket.

1. Drill holes and install anchors according to the template supplied with the bracket.
2. Install two screws for bottom of bracket. The screw heads should protrude 2.5 mm (0.01”) from the wall.

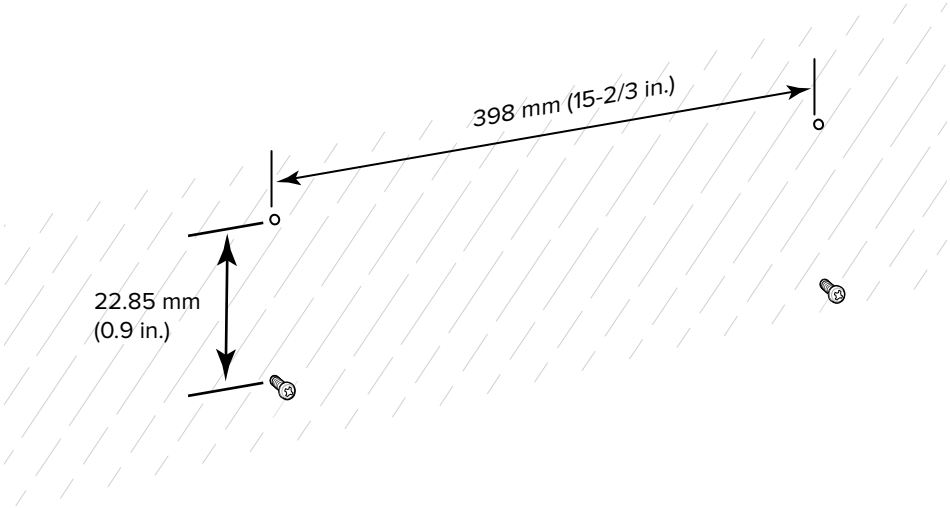

3. Align the mounting bracket’s bottom mounting key holes with the screws.
4. Hang the bracket on the screws.

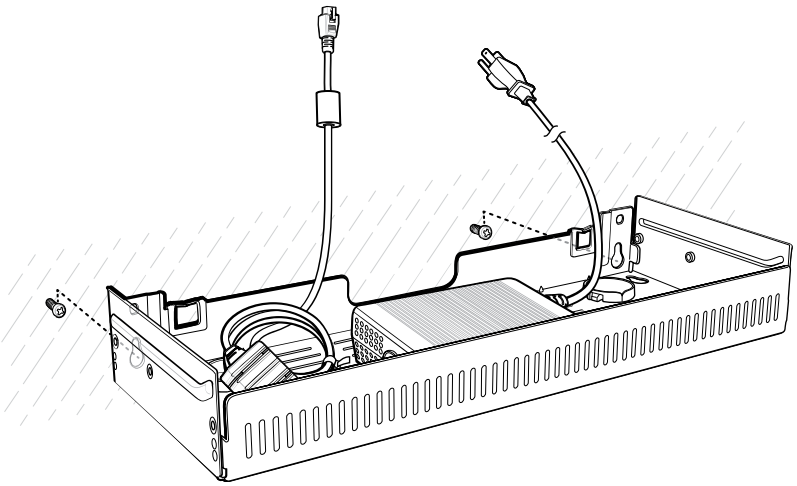

5. Install two top screws.

6. Tighten all screws.

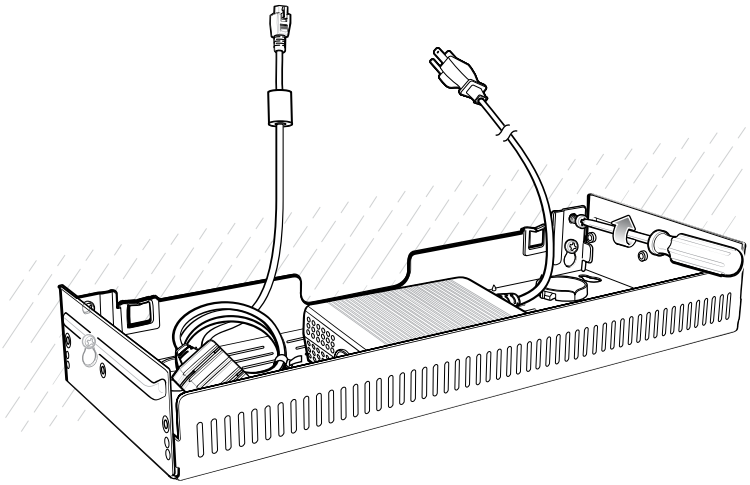

7. Add the four 4-Slot Battery Chargers or cradle onto the bracket.
8. Route cables and connect to power source.

Application Deployment

This section provides an overview of device security, app development, and app management. It also provides instructions for installing apps and updating the device software.

NOTE: Ensure the date is set correctly before installing certificates or when accessing secure websites.

Security

The current Bluetooth specification defines security at the link level. Application-level security is not specified. This allows application developers to define security mechanisms tailored to their specific needs. Link-level security occurs between devices, not users, while application-level security can be implemented on a per-user basis. The Bluetooth specification defines security algorithms and procedures required to authenticate devices, and if needed, encrypt the data flowing on the link between the devices. Device authentication is a mandatory feature of Bluetooth while link encryption is optional.

Pairing of Bluetooth devices is accomplished by creating an initialization key used to authenticate the devices and create a link key for them. Entering a common personal identification number (PIN) in the devices being paired generates the initialization key. The PIN is never sent over the air. By default, the Bluetooth stack responds with no key when a key is requested (it is up to you to respond to the key request event). Authentication of Bluetooth devices is based upon a challenge-response transaction. Bluetooth allows for a PIN or passkey used to create other 128-bit keys used for security and encryption. The encryption key is derived from the link key used to authenticate the pairing devices. Also, the limited range and fast frequency hopping of the Bluetooth radios make long-distance eavesdropping difficult.

Recommendations are:

- Perform pairing in a secure environment.
- Keep PIN codes private and do not store the PIN codes in the device.
- Implement application-level security.

Secure Certificates

If the VPN or Wi-Fi networks rely on secure certificates, obtain the certificates and store them in the device's secure credential storage before configuring access to the VPN or Wi-Fi networks.

If downloading the certificates from a website, set a password for the credential storage. The device supports X.509 certificates saved in PKCS#12 key store files with a .p12 extension (if key store has a .pfx or other extension, change to .p12).

The device also installs any accompanying private key or certificate authority certificates contained in the key store.

Installing a Secure Certificate

If required by the VPN or Wi-Fi network, install a secure certificate on the device.

1. Copy the certificate from the host computer to the root of the microSD card or the device's internal memory.
2. Go to **Settings**.
3. Touch **Security** > **Encryption & credentials**.
4. Select the type of certificate.
5. Navigate to the location of the certificate file.
6. Touch the filename of the certificate to install.
7. If prompted, enter the certificate's password and touch **OK**.
8. Enter a name for the certificate and in the Credential use drop-down, select **VPN and apps** or **Wi-Fi**.
9. Touch **OK**.

The certificate can now be used when connecting to a secure network. For security, the certificate is deleted from the microSD card or internal memory.

See Also

USB Communication

Configuring Credential Storage Settings

Configure credential storage from the device settings.

1. Go to **Settings**.
2. Touch **Security** > **Encryption & credentials** .
3. Select an option.
   - Touch **Trusted credentials** to display the trusted system and user credentials.
   - Touch **User credentials** to display user credentials.
   - Touch **Install a certificate** to install a secure certificate from the microSD card or internal storage.
   - Touch **Clear credentials** to delete all secure certificates and related credentials.

Android Development Tools

Development tools for Android include Android Studio, EMDK for Android, and StageNow.

Android Development Workstation

Android development tools are available at developer.android.com.

To start developing applications for the device, download Android Studio. Development can take place on a Microsoft® Windows®, Mac® OS X®, or Linux® operating system.

Applications are written in Java or Kotlin, but compiled and executed in the Dalvik virtual machine. Once the Java code is compiled cleanly, the developer tools make sure the application is packaged properly, including the AndroidManifest.xml file.

Android Studio contains a full featured IDE as well as SDK components required to develop Android applications.

Enabling Developer Options

The **Developer options** screen sets development-related settings. By default, the Developer Options are hidden.

1. Go to **Settings**.
2. Touch **About phone**.
3. Scroll down to **Build number**.
4. Tap **Build Number** seven times.

   The message **You are now a developer!** appears.
5. Touch **Back**.
6. On Android 11, touch **System** > **Advanced** > **Developer options**.
7. On Android 13, touch **System** > **Developer options**.
8. Slide the **USB debugging** switch to the **ON** position.

EMDK for Android

EMDK for Android provides developers with tools to create business applications for enterprise mobile devices. It is designed for use with Google's Android Studio and includes Android class libraries such as Barcode, sample applications with source code, and the associated documentation.

EMDK for Android allows applications to take full advantage of the capabilities that Zebra devices have to offer. It embeds Profile Manager technology within Android Studio IDE, providing a GUI-based development tool designed specifically for Zebra devices. This allows fewer lines of code, resulting in reduced development time, effort, and errors.

For more information, go to techdocs.zebra.com/emdk-for-android/about/.

StageNow for Android

StageNow is Zebra's next-generation Android Staging Solution built on the MX platform. It allows quick and easy creation of device profiles and can deploy to devices simply by scanning a barcode or reading a tag.

The StageNow Staging Solution includes the following components:

- The StageNow Workstation tool installs on the staging workstation (host computer) and lets the administrator easily create staging profiles for configuring device components, and perform other staging actions such as checking the condition of a target device to determine suitability for software upgrades or other activities. The StageNow Workstation stores profiles and other created content for later use.
- The StageNow Client resides on the device and provides a user interface for the staging operator to initiate staging. The operator uses one or more of the desired staging methods (print and scan a barcode or read an NFC tag) to deliver staging material to the device.

For more information, go to techdocs.zebra.com/stagenow/.

GMS Restricted

GMS Restricted mode deactivates Google Mobile Services (GMS). All GMS apps are disabled on the device and communication with Google (analytics data collection and location services) is disabled.

Use StageNow to disable or enable GMS Restricted mode. After a device is in GMS Restricted mode, enable and disable individual GMS apps and services using StageNow. To ensure GMS Restricted mode persists after an Enterprise Reset, use the Persist Manager option in StageNow.

For more information, go to techdocs.zebra.com/gmsmgr/.

ADB USB Setup

To use the Android Debug Bridge (ADB), install the development SDK on the host computer then install the ADB and USB drivers.

Before installing the USB driver, make sure that the development SDK is installed on the host computer. Go to developer.android.com/sdk/index.html for details on setting up the development SDK.

The ADB and USB drivers for Windows and Linux are available on the Zebra Support Central website at zebra.com/support. Download the ADB and USB Driver Setup package. Follow the instructions with the package to install the ADB and USB drivers for Windows and Linux.

Enabling USB Debugging

By default, USB debugging is disabled.

1. Go to **Settings**.
2. Touch **About phone**.
3. Scroll down to **Build number**.
4. Tap **Build number** seven times.

   The message **You are now a developer!** displays.
5. Touch **Back**.
6. On Android 11, touch **System** > **Advanced** > **Developer options**.
7. On Android 13, touch **System** > **Developer options**.
8. Slide the **USB debugging** switch to the **ON** position.
9. Touch **OK**.
10. Connect the device to the host computer using the Rugged Charge/USB Cable.

    The **Allow USB debugging?** dialog box appears on the device.

    If the device and host computer are connected for the first time, the **Allow USB debugging?** dialog box with the **Always allow from this computer** check box displays. Select the check box, if required.
11. Touch **OK**.
12. On the host computer, navigate to the **platform-tools** folder and open a command prompt window.

13. Type `adb devices`.

    The following displays:

```
List of devices attached          XXXXXXXXXXXXXXX device
```

    Where XXXXXXXXXXXXXXX is the device number.

NOTE: If device number does not appear, ensure that ADB drivers are installed properly.

14. Return to the Home screen.

Entering Android Recovery Manually

Many of the update methods discussed in this section require putting the device into Android Recovery mode. If you are unable to enter Android Recovery mode through `adb` commands, use the following steps to manually enter Android Recovery mode.

1. Press and hold the Power button until the menu appears.
2. Touch **Restart**.
3. Press and hold the PTT button until the device vibrates.

   The System Recovery screen appears.

Application Installation Methods

After an application is developed, install the application onto the device using one of the supported methods.

- USB connection, see Installing Applications Using the USB Connection on page 200.
- Android Debug Bridge, see Installing Applications Using the Android Debug Bridge.
- Wireless Android Debug Bridge, see Installing Applications Using Wireless ADB on page 201.
- microSD Card, see Installing Applications Using a microSD Card on page 204.
- Mobile device management (MDM) platforms that have application provisioning. Refer to the MDM software documentation for details.

Installing Applications Using the USB Connection

Use the USB connection to install applications onto the device.

CAUTION—PRODUCT DAMAGE: When connecting the device to a host computer and mounting the microSD card, follow the host computer's instructions for connecting and disconnecting USB devices, to avoid damaging or corrupting files.

1. Connect the device to a host computer using the Rugged Charge/USB cable.
2. On the device, pull down the Notification panel and touch **Charging this device via USB**.

   By default, **No data transfer** is selected.
3. Touch **File Transfer**.
4. On the host computer, open a file explorer application.

5. On the host computer, copy the application APK file from the host computer to the device.

CAUTION—PRODUCT DAMAGE: Carefully follow the host computer's instructions to unmount the microSD card and disconnect USB devices correctly to avoid losing information.

6. Disconnect the device from the host computer.
7. Swipe the screen up and select to view files on the Internal Storage.
8. Locate the application APK file.
9. Touch the application file.
10. Touch **Continue** to install the app or **Cancel** to stop the installation.
11. To confirm installation and accept what the application affects, touch **Install**. Otherwise, touch **Cancel**.
12. Touch **Open** to open the application or **Done** to exit the installation process.

    The application appears in the App list.

Installing Applications Using the Android Debug Bridge

Use ADB commands to install applications onto the device.

CAUTION—PRODUCT DAMAGE: When connecting the device to a host computer and mounting the microSD card, follow the host computer's instructions for connecting and disconnecting USB devices to avoid damaging or corrupting files.

1. Ensure that the ADB drivers are installed on the host computer.
2. Connect the device to a host computer using a USB cable.
3. Go to **Settings**.
4. On Android 11, touch **System** > **Advanced** > **Developer options** .
5. On Android 13, touch **System** > **Developer options**.
6. Touch **USB Debugging**. A check appears in the check box. The **Allow USB debugging?** dialog box appears.
7. Touch **OK**.
8. On the host computer, navigate to the **platform-tools** folder and open a command prompt window.
9. Type `adb install <application>`

   where: <application> = the path and filename of the apk file.
10. Disconnect the device from the host computer.

Installing Applications Using Wireless ADB

Use ADB commands to install an application onto the device.

Go to the Zebra Support & Downloads web site at zebra.com/support and download the appropriate file to a host computer.

IMPORTANT: Note the following:

- Ensure that the latest adb files are installed on the host computer.
- The device and the host computer must be on the same wireless network.

1. Go to **Settings**.
2. On Android 11, touch **System** > **Advanced** > **Developer options**.
3. On Android 13, touch **System** > **Developer options**.

IMPORTANT: If **Developer options** does not appear in the advanced system settings on your device, perform the steps in Enabling Developer Options.

4. Slide the **USB debugging** switch to the **ON** position.
5. At the prompt, tap **OK**.
6. Slide the **Wireless debugging** switch to the **ON** position.
   a) If the device and host computer are connected for the first time, the **Allow wireless debugging on this network?** dialog box with the **Always allow on this network** check box displays. Select the check box, if required.
   b) Touch **ALLOW**.

7. Touch **Wireless debugging**.

   The Wireless debugging screen displays.

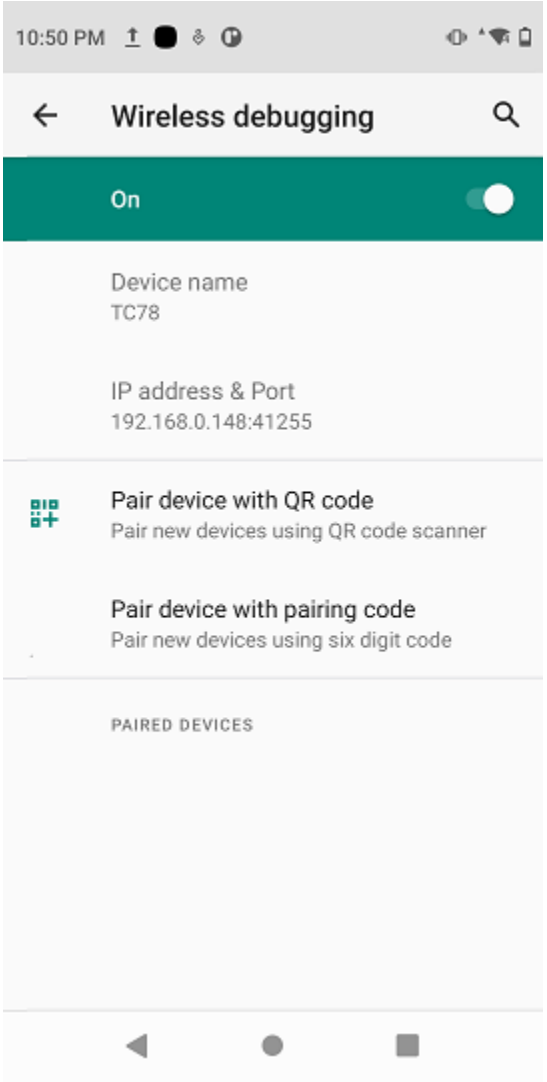

8. Note the IP address and Port on the **Wireless debugging** screen.
9. Touch **Pair device with pairing code**.

   The **Pair with device** dialog box displays.

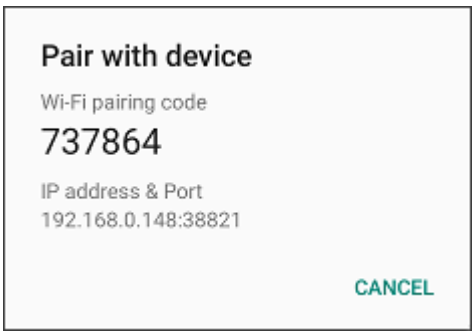

10. Note the Port on the **Pair with device** dialog box. It will be different than the one on the **Wireless debugging** screen. The IP address will be the same.
11. On the host computer, navigate to the **platform-tools** folder and open a command prompt window.
12. Type `adb pair XX.XX.XX.XX:XXXXX`

    where XX.XX.XX.XX:XXXXX is the IP address and port number from the **Pair with device** dialog box.
13. Press **Enter**.
14. Type the pairing code from the **Pair with device** dialog box.
15. Press **Enter**.
16. Type `adb connect XX.XX.XX.XX:XXXXX`

    where XX.XX.XX.XX:XXXXX is the IP address and port number from the **Wireless debugging** screen.
17. Press **Enter**.

    The device is now connected to the host computer.
18. Type `adb devices`.

    The following displays:

```
List of devices attached          XXXXXXXXXXXXXXXX device
```

    Where XXXXXXXXXXXXXXXX is the device number.

NOTE: If device number does not appear, ensure that ADB drivers are installed properly.

19. Press **Enter**.
20. Type `adb install <file>`.

    where <file> = the path and filename of the apk file.
21. Press **Enter**.
22. On the host computer, type:

    `adb disconnect`.
23. Press **Enter**.

Installing Applications Using a microSD Card

Use a microSD card to install applications on your device.

CAUTION—PRODUCT DAMAGE: When connecting the device to a host computer and mounting the microSD card, follow the host computer's instructions for connecting and disconnecting USB devices, to avoid damaging or corrupting files.

It is strongly recommended that prior to use, you must format the microSD card on the device.

1. Copy the APK file to the root of the microSD card.
   - Copy the APK file to a microSD card using a host computer (see USB Communication for more information), and then install the microSD card into the device (see Replacing the microSD Card for more information).
   - Connect the device with a microSD card already installed to the host computer, and copy the .apk file to the microSD card. See USB Communication for more information. Disconnect the device from the host computer.
2. Connect the device to a host computer using USB.
3. Copy the application APK file from the host computer to the microSD card.
4. Remove the microSD card from the host computer.
5. Press and hold the Power button on the device until the menu appears.
6. Touch **Power off**.
7. Press the two battery latches in.
8. Lift the battery from the device.
9. Lift the access door.
10. Insert the microSD card.
11. Replace the access door.
12. Insert the battery, bottom first, into the battery compartment in the back of the device.
13. Press the battery down until the battery release latches snap into place.
14. Press and hold **Power** to turn on the device.
15. Swipe the screen up and select to view files on the microSD card.
16. Locate the application APK file.
17. Touch the application file.
18. Touch **Continue** to install the app or **Cancel** to stop the installation.
19. To confirm installation and accept what the application affects, touch **Install**. Otherwise, touch **Cancel**.
20. Touch **Open** to open the application or **Done** to exit the installation process.

    The application appears in the App list.

See Also

USB Communication

Uninstalling an Application

Free up device memory by removing unused apps.

1. Go to **Settings**.
2. On Android 11, touch **Apps & notifications**.
3. On Android 13, touch **Apps**.
4. Touch **See all apps** to view all apps in the list.
5. Scroll through the list to the app.

6. Touch the app.

   The **App info** screen displays.
7. Touch **Uninstall**.
8. Touch **OK** to confirm.

Android System Update

System Update packages can contain either partial or complete updates for the operating system. Zebra distributes the System Update packages on the Zebra Support & Downloads website. Perform a system update using either a microSD card or using ADB.

Performing a System Update Using microSD Card

It is strongly recommended that, prior to use, you format the microSD card on the device.

Go to the Zebra Support & Downloads website at zebra.com/support and download the appropriate System Update package to a host computer.

1. Copy the System Update ZIP file to the root of the microSD card.
   - Copy the ZIP file to a microSD card using a host computer, and then install the microSD card into the device. See Getting Started for information on installing the microSD card.
   - Connect the device (with a microSD card already installed) to the host computer, copy the ZIP file to the microSD card, and then disconnect the device from the host computer.
2. Press and hold **Power** until the menu appears.
3. Touch **Restart**.
4. Press and hold **PTT** until the device vibrates.

   The System Recovery screen appears.
5. Press **Volume Up** and **Volume Down** to navigate to **Apply upgrade from SD card**.
6. Press **Power**.
7. Press **Volume Up** and **Volume Down** to navigate to the System Update file.
8. Press **Power**.

   The System Update installs, and then the device returns to the Recovery screen.
9. Press **Power** to reboot the device.

Performing a System Update Using ADB

Use ADB to perform a system update.

1. Connect the device to a host computer using a USB-C cable or by inserting the device into the 1-Slot USB/Ethernet Cradle.
2. Go to **Settings**.
3. On Android 11, touch **System** > **Advanced** > **Developer options**.
4. On Android 13, touch **System** > **Developer options**.

5. Slide the **USB debugging** switch to the **ON** position.
6. If the device and host computer are connected for the first time, the **Allow USB debugging?** dialog box with the **Always allow from this computer** check box displays. Select the check box, if required
7. Touch **OK**.
8. On the host computer, navigate to the **platform-tools** folder and open a command prompt window.
9. Type `adb devices`.

   If the device number does not display, ensure the ADB drivers are installed properly
10. Type `adb reboot recovery`.
11. Press **Enter**.

    The System Recovery screen displays on the device.
12. Press **Volume Up** and **Volume Down** to navigate to **Apply upgrade from ADB**
13. Press **Power**.
14. On the host computer command prompt window type `adb sideload <file>`.

    where: <file> = the path and filename of the zip file
15. Press **Enter**.

    The System Update installs (progress displays as a percentage in the Command Prompt window), and then the System Recovery screen displays on the device.
16. Press **Power** to reboot the device.

If you are not able to enter Android Recovery mode through the adb command, go to Entering Android Recovery Manually on page 200.

Verifying System Update Installation

Verify that the system update was successful.

1. Go to **Settings**.
2. Touch **About phone**.
3. Scroll down to **Build number**.
4. Ensure that the build number matches the new system update package file number.

Android-Enterprise Reset

An Enterprise Reset erases all user data in the /data partition, including data in the primary storage locations (/sdcard and emulated storage), while preserving the contents of the /enterprise folder and its subfolders. The contents of the /enterprise folder and its subfolders are preserved. Zebra distributes the Enterprise Reset packages on the Zebra Support & Downloads website.

Before performing an Enterprise Reset, provision all necessary configuration files and restore after the reset.

Performing an Enterprise Reset Using microSD Card

It is strongly recommended that, prior to use, you format the microSD card on the device.

1. Copy the Enterprise Reset zip file to the root of the microSD card.
   - Copy the zip file to a microSD card using a host computer and then install the microSD card into the device. See Getting Started for more information.
   - Connect the device with a microSD card already installed to the host computer and copy zip file to the microSD card. See USB Communication for more information. Disconnect the device from the host computer.
2. Press and hold **Power** until the menu appears.
3. Touch **Restart**.
4. Press and hold **PTT** until the device vibrates.

   The System Recovery screen appears.
5. Press **Volume Up** and **Volume Down** to navigate to **Apply upgrade from SD card**.
6. Press **Power**.
7. Press **Volume Up** and **Volume Down** to navigate to the Enterprise Reset file.
8. Press **Power**.

   The Enterprise Reset occurs and then the device returns to the Recovery screen.
9. Press **Power** to reboot the device.

Performing an Enterprise Reset Using ADB

Perform an Enterprise Reset using ADB.

1. Connect the device to a host computer using the Rugged Charge/USB cable or by inserting the device into the 1-Slot USB/Charge Only Cradle.
2. Connect the cable or cradle to the host computer.
3. Go to **Settings**.
4. On Android 11, touch **System** > **Advanced** > **Developer options**.
5. On Android 13, touch **System** > **Developer options**.
6. Slide the **USB debugging** switch to the **ON** position.
7. If the device and host computer are connected for the first time, the **Allow USB debugging?** dialog box with the **Always allow from this computer** check box displays. Select the check box, if required.
8. Touch **OK**.
9. On the host computer, navigate to the **platform-tools** folder and open a command prompt window.
10. Type `adb reboot recovery`.
11. Press **Enter**.

    The System Recovery screen appears on the device.

NOTE: If you are not able to enter Android Recovery mode through the adb command, go to Entering Android Recovery Manually.

12. Press **Volume Up** and **Volume Down** to navigate to **Apply upgrade from ADB**.
13. Press **Power**.
14. On the host computer command prompt window type `adb sideload <file>`

    where: <file> = the path and filename of the zip file.
15. Press **Enter**.

    The Enterprise Reset package installs and then the System Recovery screen appears on the device.
16. Press **Power** to reboot the device.

Android Factory Reset

A Factory Reset erases all data in the /data and /enterprise partitions in internal storage and clears all device settings. A Factory Reset returns the device to the last installed operating system image. To revert to a previous operating system version, re-install that operating system image. Zebra distributes the Factory Reset packages on the Zebra Support & Downloads website.

Performing a Factory Reset Using microSD Card

Perform a Factory Reset using a microSD card.

Go to the Zebra Support & Downloads website at zebra.com/support and download the appropriate Factory Reset file to a host computer.

1. Copy the Factory Reset zip file to the root of the microSD card.
   - Copy the zip file to a microSD card using a host computer and then installing the microSD card into the device. See Getting Started for more information.
   - Connect the device with a microSD card already installed to the host computer, copy zip file to the microSD card, and then disconnect the device from the host computer.
2. Press and hold **Power** until the menu appears.
3. Touch **Restart**.
4. Press and hold **PTT** until the device vibrates.

   The System Recovery screen appears.
5. Press **Volume Up** and **Volume Down** to navigate to **Apply upgrade from SD card**.
6. Press **Power**.
7. Use **Volume Up** and **Down Arrow** to navigate to the Factory Reset file.
8. Press **Power**.

   The Factory Reset occurs, and then the device returns to the Recovery screen.
9. Press **Power** to reboot the device.

See Also

USB Communication

Performing a Factory Reset Using ADB

Perform a Factory Reset using ADB.

Go to the Zebra Support & Downloads web site at zebra.com/support and download the appropriate Factory Reset file to a host computer.

1. Connect the device to a host computer using the Rugged Charge/USB cable or by inserting the device into the 1-Slot USB/Charge Only Cradle.
2. Go to **Settings**.
3. On Android 11, touch **System** > **Advanced** > **Developer options**.
4. On Android 13, touch **System** > **Developer options**.
5. Slide the **USB debugging** switch to the **ON** position.
6. If the device and host computer are connected for the first time, the **Allow USB debugging?** dialog box with the **Always allow from this computer** check box displays. Select the check box, if required.
7. Touch **OK**.
8. Type `adb reboot recovery`.
9. Press **Enter**.

   The System Recovery screen appears on the device.
10. Press **Volume Up** and **Volume Down** buttons to navigate to **Apply upgrade from ADB**.
11. Press **Power**.
12. On the host computer command prompt window type `adb sideload <file>`.

    where: <file> = the path and filename of the zip file.
13. Press **Enter**.

    The Factory Reset package installs, and then the System Recovery screen appears on the device.
14. Press **Power** to reboot the device.

Android Storage

The device contains multiple types of file storage.

- Random Access Memory (RAM)
- On-device Storage
- Internal storage
- External storage (microSD card)
- Enterprise folder

NOTE: It is recommended to install a microSD card on the device due to limited internal storage space.

Random Access Memory

Executing programs use RAM to store data. Data stored in RAM is lost upon a reset.

The operating system manages how applications use RAM. It only allows applications and component processes and services to use RAM when required. It may cache recently used processes in RAM, so they restart more quickly when opened again, but it will erase the cache if it needs the RAM for new activities.

The screen displays the amount of used and free RAM.

- **Performance** - Indicates memory performance.
- **Total memory** - Indicates the total amount of RAM available.
- **Average used (%)** - Indicates the average amount of memory (as a percentage) used during the period of time selected (default - 3 hours).
- **Free** - Indicates the total amount of unused RAM.
- **Memory used by apps** - Touch to view RAM usage by individual apps.

Viewing Memory

View the amount of memory used and free RAM.

1. Go to **Settings**.
2. On Android 11, touch **System** > **Advanced** > **Developer options**.
3. On Android 13, touch **System** > **Developer options**.
4. Touch **Memory**.

Internal Storage

The device has internal storage. The internal storage content can be viewed and files copied to and from when the device is connected to a host computer. Some applications are designed to be stored on the internal storage rather than in internal memory.

Viewing Internal Storage

View available and used internal storage on the device.

1. Go to **Settings**.
2. Touch **Storage**.

   Storage displays the total amount of space on internal storage and amount used.

   If the device has removable storage installed, touch **Internal shared storage** to display the amount of internal storage used by apps, photos, videos, audio, and other files.

External Storage

The device can have a removable microSD card. The microSD card content can be viewed and files copied to and from when the device is connected to a host computer. The device can have a removable USB drive. The USB drive content can be viewed and files copied to and from when the device is connected to a host computer.

Viewing External Storage

Portable storage displays the total amount of space on the installed microSD card or USB drive and the amount used.

1. Go to **Settings**.
2. Touch **Storage**.

   Touch **General USB Drive** to view the contents of the card.

   Touch **SD card** to view the contents of the card.
3. To unmount the microSD card, touch ⏏.
4. To unmount the USB drive, touch ⏏.

Formatting a microSD Card as Portable Storage

Format a microSD card as portable storage for the device.

1. Touch **SD card**.
2. Touch ⋮ > **Storage settings**.
3. Touch **Format**.
4. Touch **ERASE & FORMAT**.
5. Touch **DONE**.

Formatting a microSD Card as Internal Memory

You can format a microSD card as internal memory to increase the actual amount of the device's internal memory. Once formatted, the microSD card can only be read by this device.

NOTE: The suggested maximum SD card size is 128 GB when using internal storage.

1. Touch **SD card**.
2. Touch ⋮ > **Storage settings**.
3. Touch **Format as internal**.
4. Touch **ERASE & FORMAT**.
5. Touch **DONE**.

Enterprise Folder

The Enterprise folder (within internal flash) is a super-persistent storage that is persistent after a reset and an Enterprise Reset.

The Enterprise folder is erased during a Factory Reset. The Enterprise folder is used for deployment and device-unique data. The Enterprise folder is approximately 128 MB (formatted). Applications can persist data after an Enterprise Reset by saving data to the enterprise/user folder. The folder is ext4 formatted and is only accessible from a host computer using ADB or from an MDM.

Managing Apps

Apps use two kinds of memory: storage memory and RAM. Apps use storage memory for themselves and any files, settings, and other data they use. They also use RAM when they are running.

1. Go to **Settings**.
2. On Android 11, touch **Apps & notifications**.
3. On Android 13, touch **Apps**.
4. Touch **See all XX apps** to view all apps on the device.
5. Touch ⋮ > **Show system** to include system processes in the list.
6. Touch an app, process, or service in the list to open a screen with details about it and, depending on the item, to change its settings, permissions, notifications and to force stop or uninstall it.

App Details

Apps have different kinds of information and controls.

- **Force stop** - Stop an app.
- **Disable** - Disable an app.
- **Uninstall** - Remove the app and all of its data and settings from the device.
- **Notifications** - Set the app notification settings.
- **Permissions** - Lists the areas on the device that the app has access to.
- **Storage & cache** - Lists how much information is stored and includes buttons for clearing it.
- **Mobile data & Wi-Fi** - Provides information about data consumed by an app.
- **Mobile data & Wi-Fi** - Provides information about data consumed by an app. Mobile data not supported.
- **Advanced:**
  - **Screen time** - Displays the amount of time the app has displayed on the screen.
  - **Battery** - Lists the amount of computing power used by the app.
  - **Open by default** - If you have configured an app to launch certain file types by default, you can clear that setting here.
  - **Display over other apps** - Allows an app to display on top of other apps.
  - **App details** - Provides a link to additional app details on the Play store.
  - **Additional settings in the app** - Opens settings in the app.
  - **Modify system settings** - Allows an app to modify the system settings.

Managing Downloads

Files and apps downloaded using the Browser or Email are stored on the USB drive or Internal storage in the Download directory. Use the Downloads app to view, open, or delete downloaded items. Files and apps downloaded using the Browser or Email are stored on the microSD card or Internal storage in the Download directory. Use the Downloads app to view, open, or delete downloaded items. Files and apps downloaded using the Browser or Email are stored in Internal storage in the Download directory. Use the Downloads app to view, open, or delete downloaded items.

1. Swipe the screen up and touch .
2. Touch > **Downloads**.
3. Touch and hold an item to delete, and then touch .

   The item is deleted from the device.

Maintenance and Troubleshooting

This section includes instructions on cleaning and storing the device, and provides troubleshooting solutions for potential problems during operation.

Maintaining the Device

For trouble-free service, observe the following tips when using the device.

- To avoid scratching the screen, use a Zebra-approved, capacitive-compatible stylus (sold separately), intended for use with a touch-sensitive screen. Never use an actual pen, pencil, or any other sharp object on the device's screen.
- The touch-sensitive screen of the device is glass. Do not drop the device or subject it to strong impact.
- Protect the device from temperature extremes. Do not leave it on the dashboard of a car on a hot day, and keep it away from heat sources.
- Do not store the device in any location that is dusty, damp, or wet.
- Use a soft lens cloth to clean the device. If the surface of the device screen becomes soiled, clean it with a soft cloth moistened with an approved cleanser. For a list of approved cleansers, see Approved Cleaning and Disinfectant Agents.
- Periodically replace the rechargeable battery to ensure maximum battery life and product performance. Battery life depends on individual usage patterns.

Display Best Practices

Image Retention

Image retention may occur when a static image continuously displays for extended periods of time. A user may see a faint remnant of the image even after a new image displays. To prevent image retention:

- Set the display to turn off after a few minutes of idle time.
- Rotate background images on a periodic basis.
- Turn off the display when the device in not in use.

- Use a screen saver with the following characteristics:
  - background color set to black
  - use a small moving image (approximately 2% of the display size).
  - move the image randomly across the screen
  - screen saver should be active as long as the static image is used.

Best Practices for Enterprise Mobile Devices Operating in Hot Environments and Direct Sunlight

Exceeding the operating temperature by external hot environments will cause the device's thermal sensor to notify you of a shutdown of the device until the device's temperature returns to the operational temperature range.

- Avoid direct sunlight to the device - The easiest way to prevent overheating is to keep the device out of direct sunlight. The device absorbs light and heat from the sun and retains it, getting hotter the longer it remains in sunlight and heat.
- Avoid leaving the device in a vehicle on a hot day or hot surface - Similar to leaving the device out in direct sunlight, the device will also absorb the thermal energy from a hot surface or when left on the dashboard of a vehicle or seat, getting warmer the longer it remains on the hot surface or inside the hot vehicle.
- Turn off unused apps on the device. Open, unused apps running in the background can cause the device to work harder, which in turn may cause it to heat up. This will also improve your mobile computer device's battery life performance.
- Avoid turning your screen brightness up - Just the same as running background apps, turning your brightness up will force your battery to work harder and create more heat. Minimizing your screen brightness may extend operating the mobile computer device in hot environments.

Battery Safety Guidelines

To use the device safely, you must follow the battery guidelines.

- The area in which the units are charged should be clear of debris and combustible materials or chemicals. Particular care should be taken when the device is charged in a non-commercial environment.
- Follow the battery usage, storage, and charging guidelines found in this guide.
- Improper battery use may result in a fire, explosion, or other hazard.
- To charge the mobile device battery, the ambient battery and charger temperatures must be between 0°C to 50°C (32°F to 122°F).
- Do not use incompatible batteries and chargers, including non-Zebra batteries and chargers. Use of an incompatible battery or charger may present a risk of fire, explosion, leakage, or other hazard. If you have any questions about the compatibility of a battery or a charger, contact the Global Customer Support Center.
- For devices that utilize a USB port as a charging source, the device shall only be connected to products that bear the USB-IF logo or have completed the USB-IF compliance program.
- Do not disassemble, open, crush, bend, deform, puncture, or shred the battery.

- Severe impact from dropping any battery-operated device on a hard surface could cause the battery to overheat.
- Do not short-circuit a battery or allow metallic or conductive objects to contact the battery terminals.
- Do not modify or remanufacture, attempt to insert foreign objects into the battery, immerse or expose to water or other liquids, or expose to fire, explosion, or other hazard.
- Do not leave or store the equipment in or near areas that might get very hot, such as in a parked vehicle or near a radiator or other heat source. Do not place a battery into a microwave oven or dryer.
- Battery usage by children should be supervised.
- Please follow local regulations to properly dispose of used rechargeable batteries.
- Do not dispose of batteries in a fire.
- Seek medical advice immediately if a battery has been swallowed.
- In the event of a battery leak, do not allow the liquid to come in contact with the skin or eyes. If contact has been made, wash the affected area with water for 15 minutes, and seek medical advice.
- If you suspect damage to your equipment or battery, contact Customer Support to arrange for inspection.

Cleaning Instructions

CAUTION: Always wear eye protection. Read warning label on alcohol product before using. If you have to use any other solution for medical reasons please contact the Global Customer Support Center for more information.

WARNING: Avoid exposing this product to contact with hot oil or other flammable liquids. If such exposure occurs, unplug the device and clean the product immediately in accordance with these guidelines.

Cleaning and Disinfecting Guidelines

- Turn off and/or disconnect the device from AC/DC power.
- To avoid damage to the device or accessory, use only approved cleaning and disinfecting agents specified for the device.
- Follow the manufacturer’s directions on the approved cleaning and disinfecting agent for how to use their product properly and safely.
- Use pre-moistened wipes or dampen a soft sterile cloth (not wet) with the approved agent. Never spray or pour chemical agents directly onto the device.
- Use a moistened cotton-tipped applicator to reach tight or inaccessible areas. Be sure to remove any lint left over by the applicator.
- Do not allow liquid to pool.
- Allow the device to air dry before use, or dry with a soft lint-free cloth or towelette. Ensure electrical contacts are fully dry before reapplying power

Approved Cleaning and Disinfectant Agents

100% of the active ingredients in any cleaner must consist of one or some combination of the following: isopropyl alcohol, bleach/sodium hypochlorite[1] (see important note below), hydrogen peroxide, ammonium chloride or mild dish soap.

IMPORTANT:

Use pre-moistened wipes and do not allow liquid cleaner to pool.

[1]When using sodium hypochlorite (bleach) based products always follow the manufacturer's recommended instructions: use gloves during application and remove the residue afterwards with a damp alcohol cloth or a cotton swab to avoid prolonged skin contact while handling the device. Due to the powerful oxidizing nature of sodium hypochlorite the metal surfaces on the device are prone to oxidation (corrosion) when exposed to this chemical in the liquid form (including wipes).

In the event that these type of disinfectants come in contact with metal on the device, prompt removal with an alcohol-dampened cloth or cotton swab after the cleaning step is critical.

Special Cleaning Notes

The device should not be handled while wearing vinyl gloves containing phthalates, or before hands are washed to remove contaminant residue after gloves are removed.

If products containing any of the harmful ingredients listed above are used prior to handling the device, such as hand sanitizer that contain ethanolamine, hands must be completely dry before handling the device to prevent damage to the device.

IMPORTANT: If the battery connectors are exposed to cleaning agents, thoroughly wipe off as much of the chemical as possible and clean with an alcohol wipe. It is also recommended to install the battery in the terminal prior to cleaning and disinfecting the device to help minimize buildup on the connectors.

When using cleaning/disinfectant agents on the device, it is important to follow the directions prescribed by the cleaning/disinfectant agent manufacturer.

Cleaning Frequency

The cleaning frequency is at the customer's discretion due to the varied environments in which the mobile devices are used and may be cleaned as frequently as required. When dirt is visible, it is recommended to clean the mobile device to avoid the build-up of particles which make the device more difficult to clean later on.

For consistency and optimum image capture, it is recommended to clean the camera window periodically, especially when used in environments prone to dirt or dust.

Cleaning the Device

The section provides information for cleaning the device.

Housing

Thoroughly wipe the housing, including all buttons and triggers, using an approved alcohol wipe.

Display

The display can be wiped down with an approved alcohol wipe, but care should be taken not to allow any pooling of liquid around the edges of the display. Immediately dry the display with a soft, non-abrasive cloth to prevent streaking.

Camera and Exit Window

Wipe the camera and exit window periodically with a lens tissue or other material suitable for cleaning optical material such as eyeglasses.

Battery Guide Slots

Insert a cotton-tipped applicator dipped in alcohol into the battery guide rails to clean out debris and then dry with a dry cotton-tipped applicator.

Cleaning the Battery Connector

To clean the battery connectors:

1. Remove the main battery from the mobile computer.

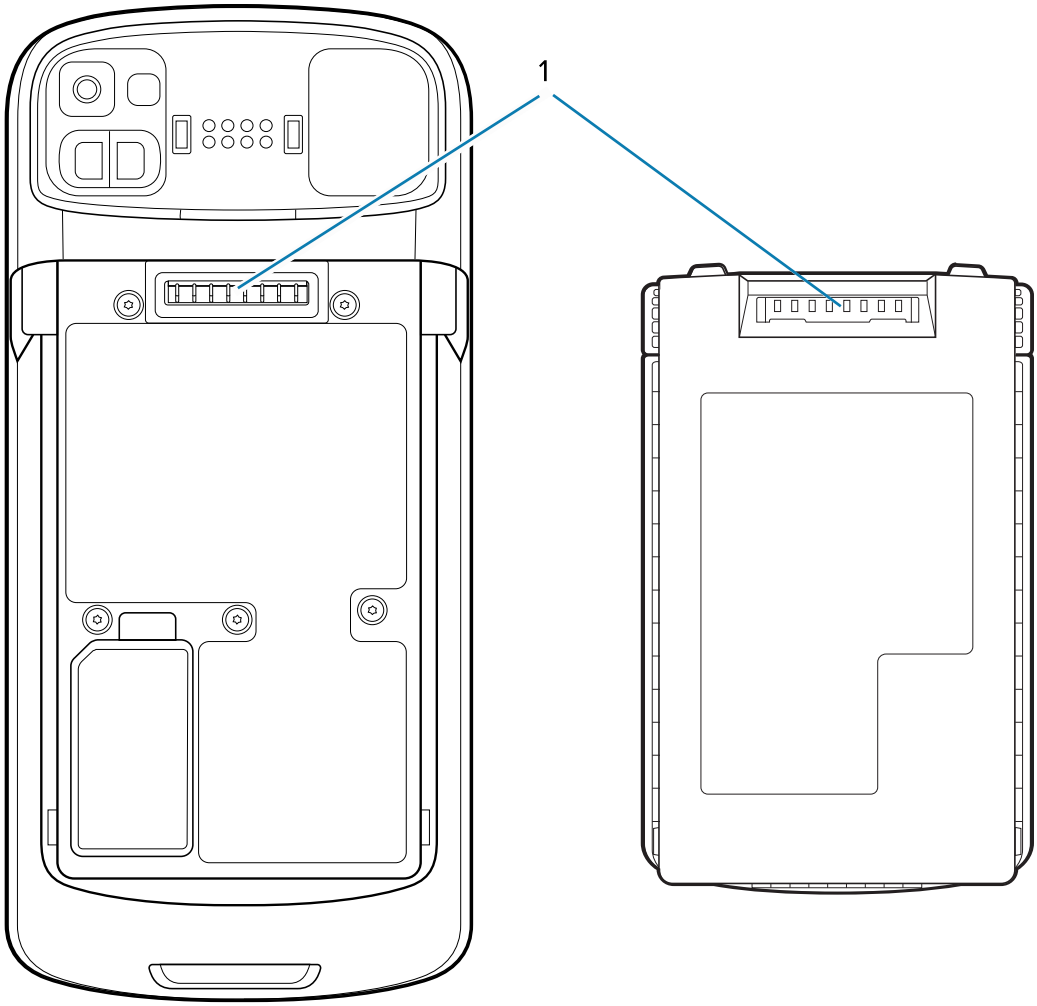

1	Battery connectors

2. Dip the cotton portion of the cotton-tipped applicator in isopropyl alcohol.
3. To remove any grease or dirt, rub the cotton portion of the cotton-tipped applicator back-and-forth across the connectors on the battery and terminal sides. Do not leave any cotton residue on the connectors.
4. Repeat at least three times.
5. Use a dry cotton-tipped applicator and repeat steps 3 and 4. Do not leave any cotton residue on the connectors.
6. Inspect the area for any grease or dirt and repeat the cleaning process if necessary.

CAUTION: After cleaning the battery connectors with bleach-based chemicals, follow the Battery Connector Cleaning instructions to remove bleach from the connectors.

Cleaning Cradle Connectors

To clean the connectors on a cradle:

1. Remove the DC power cable from the cradle.
2. Dip the cotton portion of the cotton-tipped applicator in isopropyl alcohol.
3. Rub the cotton portion of the cotton-tipped applicator along the pins of the connector. Slowly move the applicator back-and-forth from one side of the connector to the other. Do not leave any cotton residue on the connector.
4. All sides of the connector should also be rubbed with the cotton-tipped applicator.
5. Remove any lint left by the cotton-tipped applicator.
6. If grease and other dirt can be found on other areas of the cradle, use a lint-free cloth and alcohol to remove.
7. Allow at least 10 to 30 minutes (depending on ambient temperature and humidity) for the alcohol to air dry before applying power to cradle.
8. If the temperature is low and humidity is high, longer drying time is required. Warm temperature and low humidity requires less drying time.

CAUTION: After cleaning the cradle connectors with bleach-based chemicals, follow the Cleaning Cradle Connectors instructions to remove bleach from the connectors.

Troubleshooting

This section provides information for resetting and troubleshooting the device and accessories.

Resetting the Device

There are two reset functions, soft reset and hard reset.

Performing a Soft Reset

Perform a soft reset if applications stop responding.

1. Press and hold the Power button until the menu appears.
2. Touch **Restart**.
3. The device reboots.

Performing a Hard Reset

Perform a hard reset if the device stops responding.

CAUTION: Performing a hard reset with a microSD card installed in the device may cause damage or data corruption to the microSD card.

1. Simultaneously press the Power, left scan, and Volume Up buttons for at least four seconds.
2. When the screen turns off, release the buttons.
3. The device reboots.

Device Troubleshooting

Provides solutions to common device issues.

Table 27 Troubleshooting the Device

Problem	Cause	Solution
After installing the battery, the device does not boot up.	Power button was not pressed.	Press the Power button.
When pressing the power button the device does not turn on.	Battery not charged.	Charge or replace the battery in the device.
	Battery not installed properly.	Install the battery properly.
	System crash.	Perform a reset.
When pressing the power button the device does not turn on but two LEDs blink.	Battery charge is at a level where data is maintained but battery should be re-charged.	Charge or replace the battery in the device.
Battery did not charge.	Battery failed.	Replace battery. If the device still does not operate, perform a reset.
	Device removed from cradle while battery was charging.	Insert device in cradle. See Charging the Device.
	Extreme battery temperature.	Battery does not charge if ambient temperature is below 5°C (41°F) or above 40°C (104°F).
Cannot see characters on display.	Device not powered on.	Press the Power button.
During data communication with a host computer, no data transmitted, or transmitted data was incomplete.	Device removed from cradle or disconnected from host computer during communication.	Replace the device in the cradle, or reattach the communication cable and re-transmit.
	Incorrect cable configuration.	See the system administrator.
	Communication software was incorrectly installed or configured.	Perform setup.
During data communication over Wi-Fi, no data transmitted, or transmitted data was incomplete.	Wi-Fi radio is not on.	Turn on the Wi-Fi radio.
	You moved out of range of an access point.	Move closer to an access point.
During data communication over Bluetooth, no data transmitted, or transmitted data was incomplete.	Bluetooth radio is not on.	Turn on the Bluetooth radio.
	You moved out of range of another Bluetooth device.	Move within 10 meters (32.8 feet) of the other device.
During data communication over WAN, no data transmitted, or transmitted data was incomplete.	You are in an area of poor cellular service.	Move into an area that has better service.
	APN is not set up correctly.	See system administrator for APN setup information.
	SIM card not installed properly.	Remove and re-install the SIM card.

Table 27 Troubleshooting the Device (Continued)

Problem	Cause	Solution
	Data plan not activated.	Contact your service provider and ensure that your data plan is enable.
No sound.	Volume setting is low or turned off.	Adjust the volume.
Device shuts off.	Device is inactive.	The display turns off after a period of inactivity. Set this period to 15 seconds, 30 seconds, 1, 2, 5, 10 or 30 minutes.
	Battery is depleted.	Replace the battery.
Tapping the window buttons or icons does not activate the corresponding feature.	The device is not responding.	Reboot the device.
A message appears stating that the device memory is full.	Too many files stored on the device.	Delete unused memos and records. If necessary, save these records on the host computer (or use an SD card for additional memory).
	Too many applications installed on the device.	Remove user-installed applications on the device to recover memory. Select **Settings** > **Apps & notifications**. Select the app in the list and select **UNINSTALL**.
The device does not decode with reading barcode.	Scanning application is not loaded.	Load a scanning application on the device or enable DataWedge. See the system administrator.
	Unreadable barcode.	Ensure the symbol is not defaced.
	Distance between exit window and barcode is incorrect.	Place the device within proper scanning range.
	Device is not programmed for the barcode.	Program the device to accept the type of barcode being scanned. Refer to the EMDK or DataWedge application.
	Device is not programmed to generate a beep.	If the device does not beep on a good decode, set the application to generate a beep on good decode.

Table 27 Troubleshooting the Device (Continued)

Problem	Cause	Solution
	Battery is low.	If the scanner stops emitting a laser beam upon a trigger press, check the battery level. When the battery is low, the scanner shuts off before the device low battery condition notification. Note: If the scanner is still not reading symbols, contact the distributor or the Global Customer Support Center.
Device cannot find any Bluetooth devices nearby.	Too far from other Bluetooth devices.	Move closer to the other Bluetooth device(s), within a range of 10 meters (32.8 feet).
	The Bluetooth device(s) nearby are not turned on.	Turn on the Bluetooth device(s) to find.
	The Bluetooth device(s) are not in discoverable mode.	Set the Bluetooth device(s) to discoverable mode. If needed, refer to the device's user documentation for help.
Cannot unlock device.	User enters incorrect password.	If the user enters an incorrect password five times, the user is requested to wait for 30 seconds when using a PIN, Pattern or Password.

2-Slot Charge Only Cradle Troubleshooting

The following table provides troubleshooting options for the cradle.

Table 28 Troubleshooting the 2-Slot Charge Only Cradle

Problem	Cause	Solution
LEDs do not light when device is inserted.	Cradle is not receiving power.	Ensure the power cable is connected securely to both the cradle and to AC power.
	Device is not seated firmly in the cradle.	Remove and re-insert the device into the cradle, ensuring it is firmly seated.
Device battery is not charging.	Device was removed from cradle or cradle was unplugged from AC power too soon.	Ensure cradle is receiving power. Ensure device is seated correctly. Confirm main battery is charging. The battery charges from fully depleted to 90% in less than 2 hours.
	Battery is faulty.	Verify that other batteries charge properly. If so, replace the faulty battery.

Table 28 Troubleshooting the 2-Slot Charge Only Cradle (Continued)

Problem	Cause	Solution
	The device is not fully seated in the cradle.	Remove and re-insert the device into the cradle, ensuring it is firmly seated.
	Extreme battery temperature.	Battery does not charge if ambient temperature is below 0°C (32°F) or above 50°C (122°F).

5-Slot Charge Only Cradle Troubleshooting

The following table provides troubleshooting options for the cradle.

Table 29 Troubleshooting the 5-Slot Charge Only Cradle

Problem	Cause	Solution
Battery is not charging.	Device removed from the cradle too soon.	Replace the device in the cradle. The battery charges from fully depleted to 90% in less than 2 hours.
	Battery is faulty.	Verify that other batteries charge properly. If so, replace the faulty battery.
	Device is not inserted correctly in the cradle.	Remove the device and reinsert it correctly. Verify charging is active. Touch **Settings** > **Battery** to view battery status.
	Ambient temperature of the cradle is too warm.	Move the cradle to an area where the ambient temperature is between 5°C (+41°F) and +40°C (+104°F).

4-Slot Battery Charger Troubleshooting

The following table provides troubleshooting options for the charger.

Table 30 Troubleshooting the 4-Slot Battery Charger

Problem	Cause	Solution
Spare Battery Charging LED does not light when spare battery is inserted.	Spare battery is not correctly seated.	Remove and re-insert the spare battery into the charging slot, ensuring it is correctly seated.
Spare Battery not charging.	Charger is not receiving power.	Ensure the power cable is connected securely to both the charger and to AC power.
	Spare battery is not correctly seated.	Remove and re-insert the battery into the battery adapter, ensuring it is correctly seated.

Table 30 Troubleshooting the 4-Slot Battery Charger (Continued)

Problem	Cause	Solution
	Battery adapter is not seated properly.	Remove and re-insert the battery adapter into the charger, ensuring it is correctly seated.
	Battery was removed from the charger or charger was unplugged from AC power too soon.	Ensure charger is receiving power. Ensure the spare battery is seated correctly. The battery charges from fully depleted to 90% in less than 2 hours.
	Battery is faulty.	Verify that other batteries charge properly. If so, replace the faulty battery.
	Ambient temperature of the cradle is too warm.	Move the cradle to an area where the ambient temperature is between 0°C (+32°F) and +50°C (+122°F).

5-Slot Ethernet Cradle Troubleshooting

The following table provides troubleshooting options for the cradle.

Table 31 Troubleshooting the 5-Slot Ethernet Cradle

Problem	Cause	Solution
During communication, no data transmits, or transmitted data was incomplete.	Device removed from cradle during communications.	Replace device in cradle and retransmit.
	Incorrect cable configuration.	Ensure that the correct cable configuration.
	Device has no active connection.	An icon is visible in the status bar if a connection is currently active.
Battery is not charging.	Device removed from the cradle too soon.	Replace the device in the cradle. The battery charges from fully depleted to 90% in less than 2 hours.
	Battery is faulty.	Verify that other batteries charge properly. If so, replace the faulty battery.
	Device is not inserted correctly in the cradle.	Remove the device and reinsert it correctly. Verify charging is active. Touch **Settings** > **Battery** to view battery status.
	Ambient temperature of the cradle is too warm.	Move the cradle to an area where the ambient temperature is between 0°C (+32°F) and +50°C (+122°F).

Technical Specifications

For device technical specifications, go to zebra.com/us/en/products/mobile-computers/handheld/tc5x-series.

SE4720 Decode Distances

The following table provides the decode distances for the SE4720 scan engine.

Table 32 SE4720 Decode Distances

Symbol Density/ Bar Code Type	Typical Working Ranges	
	Near	Far
3 mil Code 39	7.6 cm (3.0 in.)	14.7 cm (5.8 in.)
5 mil Code 128	5.8 cm (2.3 in.)	24.9 cm (9.8 in.)
5 mil PDF417	7.6 cm (3.0 in.)	20.1 cm (7.9 in.)
6.67 mil PDF417	6.4 cm (2.5 in.)	25.7 cm (10.1 in.)
10 mil Data Matrix	5.3 cm (2.1 in.)	27.9 cm (11.0 in.)
100% UPCA	4.1 cm* (1.6 in.)	63.2 cm (24.9 in.)
15 mil Code 128	6.1 cm* (2.4 in.)	70.6 cm (27.8 in.)
20 mil Code 39	4.1 cm (1.6 in.)	91.7 cm (36.1 in.)

*Limited by width of bar code in field of view.

Notes: Photographic quality bar code at 18° tilt pitch angle under 30 fcd ambient illumination.

Distances measured from front edge of scan engine chassis.

SE55 Decode Distances

The following table provide the decode distances for the SE55 scan engine.

Table 33 SE55 Decode Distances

Symbol Density/ Bar Code Type	Typical Working Ranges	
	Near	Far
3 mil Code 39	6.9 cm (2.7 in.)	41.1 cm (16.2 in.)
5 mil Code 39	6.4 cm (2.5 in.)	67.6 cm (26.6 in.)
5 mil PDF417	7.1 cm (2.8 in.)	49.9 cm (19.6 in.)
6.67 mil PDF417	6.6 cm (2.6 in.)	65.0 cm (25.6 in.)
80% UPCA	5.0 cm* (2.0 in.)	141.0 cm (55.5 in.)
100% UPCA	6.4 cm* (2.5 in.)	180.0 cm (71.0 in.)
10 mil Data Matrix	5.6 cm* (2.2 in.)	68.8 cm (27.1 in.)
15 mil Code 128 (4 in. wide)	18.2 cm* (7.2 in.)	181.0 cm (72.0 in.)
20 mil Code 39	*	277.0 cm (109.0 in.)
55 mil Code 39	*	744.0 cm (293.0 in.)
100 mil Code 39	*	1407.0 cm (554.0 in.)
*Limited by width of bar code in field of view.		

1-Slot Charge Only Cradle Technical Specifications

This section provides technical specifications for the 2-slot Charge Only Cradle.

Table 34 2-Slot Charge Only Cradle Technical Specifications

Item	Description
Dimensions	Height: 9.9 cm (3.9 in.) Width: 19.6 cm (7.71 in.) Depth: 13.3 cm (5.24 in.)
Weight	816 g (28.7 oz.) Charge only configuration with shim 823 g (29.0 oz.) Ethernet configuration with shim
Input Voltage	12 VDC
Power Consumption	Up to 35 watts (1 device charging and communication and 1 battery charging at the same time)
Operating Temperature	0°C to 50°C (32°F to 122°F)
Storage Temperature	-40°C to 70°C (-40°F to 158°F)
Charging Temperature	0°C to 50°C (32°F to 122°F)

Table 34 2-Slot Charge Only Cradle Technical Specifications (Continued)

Item	Description
Humidity	5% to 95% non-condensing
Drop	76.2 cm (30.0 in.) drops to vinyl tiled concrete at room temperature.
Electrostatic Discharge (ESD)	+/- 15 kV air +/- 8 kV contact +/- 8 kV indirect discharge

4-Slot Battery Charger Technical Specifications

This section provides technical specifications for the 4-slot Battery Charger.

Table 35 4-Slot Battery Charger Technical Specifications

Item	Description
Dimensions	Height: 9.7 cm (3.82 in.) Width: 9.8 cm (3.86 in.) Depth: 13.3 cm (5.24 in.)
Weight	480 g (16.9 oz.)
Input Voltage	12 VDC
Power Consumption	up to 50 watts
Operating Temperature	0°C to 50°C (32°F to 122°F)
Storage Temperature	-40°C to 70°C (-40°F to 158°F)
Charging Temperature	5°C to 40°C (41°F to 104°F)
Humidity	5% to 95% non-condensing
Drop	76.2 cm (30.0 in.) drops to vinyl tiled concrete at room temperature.
Electrostatic Discharge (ESD)	+/- 20 kV air +/- 10 kV contact +/- 10 kV indirect discharge

5-Slot Charge Only Cradle Technical Specifications

This section provides technical specifications for the 5-slot Charge Only Cradle.

Table 36 5-Slot Charge Only Cradle Technical Specifications

Item	Description
Dimensions	Height: 10.6 cm (4.17 in.) Width: 48.9 cm (19.25 in.) Depth: 13.3 cm (5.24 in.)
Weight	1,937 g (68 oz.)
Input Voltage	12 VDC
Power Consumption	Up to 100 watts (5 devices charging and communication at the same time)
Operating Temperature	0°C to 50°C (32°F to 122°F)
Storage Temperature	-40°C to 70°C (-40°F to 158°F)
Charging Temperature	0°C to 50°C (32°F to 122°F)
Humidity	5% to 95% non-condensing
Drop	76.2 cm (30.0 in.) drops to vinyl tiled concrete at room temperature.
Electrostatic Discharge (ESD)	+/- 15 kV air +/- 8 kV contact +/- 8 kV indirect discharge

5-Slot Ethernet Cradle Technical Specifications

This section provides technical specifications for the 5-slot Ethernet Cradle.

Table 37 5-Slot Ethernet Cradle Technical Specifications

Item	Description
Dimensions	Height: 10.6 cm (4.17 in.) Width: 48.9 cm (19.25 in.) Depth: 13.3 cm (5.24 in.)
Weight	2,010 g (71 oz.)
Input Voltage	12 VDC
Power Consumption	Up to 100 watts (5 devices charging and communication at the same time)
Operating Temperature	0°C to 50°C (32°F to 122°F)
Storage Temperature	-40°C to 70°C (-40°F to 158°F)
Charging Temperature	0°C to 50°C (32°F to 122°F)

Table 37 5-Slot Ethernet Cradle Technical Specifications (Continued)

Item	Description
Humidity	5% to 95% non-condensing
Drop	76.2 cm (30.0 in.) drops to vinyl tiled concrete at room temperature.
Electrostatic Discharge (ESD)	+/- 15 kV air +/- 8 kV contact +/- 8 kV indirect discharge

Trigger Handle Technical Specifications

This section provides technical specifications for the Trigger Handle.

Table 38 Trigger Handle Technical Specifications

Item	Description
Dimensions	Height: 17.2 cm (6.7 in.) Width: 13.3 cm (5.2 in.) Depth: 8.8 cm (3.4 in.)
Weight	127.6 g (4.5 oz.)
Input Voltage	12 VDC
Operating Temperature	-20°C to 50°C (-4°F to 122°F)
Storage Temperature	-40°C to 70°C (-40°F to 158°F)
Humidity	5% to 95% non-condensing
Drop	Trigger/TC5X device: 6 feet drop - 4 drops on 6 sides to concrete over -20°C to 50°C temperature range. Separation of terminal and trigger handle is acceptable during drop.
	Trigger only: 6 feet drop - 4 drops on 6 sides to concrete over -20°C to 50°C temperature range.
Electrostatic Discharge (ESD)	+/- 15 kV air +/- 8 kV contact

Charge/USB Cable Technical Specifications

This section provides technical specifications for the Charge/USB Cable.

Table 39 Charge/USB Cable Technical Specifications

Item	Description
Length	164 +/- 6 cm (64.6 +/- 2.4 in.)

Table 39 Charge/USB Cable Technical Specifications (Continued)

Item	Description
Input Voltage	5.0 VDC
Operating Temperature	-20°C to 50°C (-4°F to 122°F)
Storage Temperature	-40°C to 70°C (-40°F to 158°F)
Humidity	10% to 95% non-condensing
Drop	76.2 cm (30.0 in.) drops to vinyl tiled concrete at room temperature.
Electrostatic Discharge (ESD)	+/- 15 kV air +/- 8 kV contact